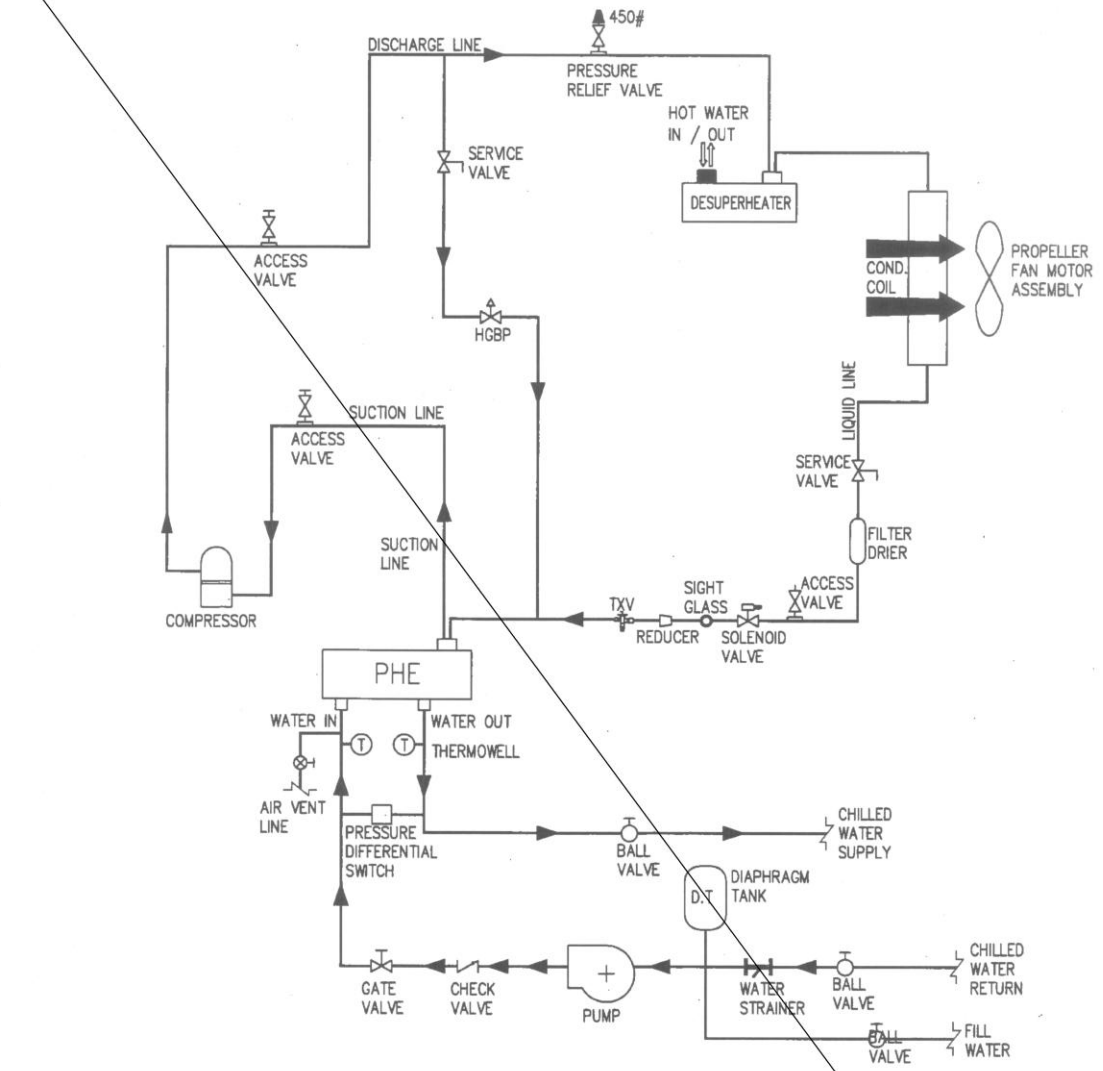

FIGURE 1 : AIR COOLED CHILLER SCHEMATIC DIAGRAM

1
12
4
33
19
24
23
32
17
21
25

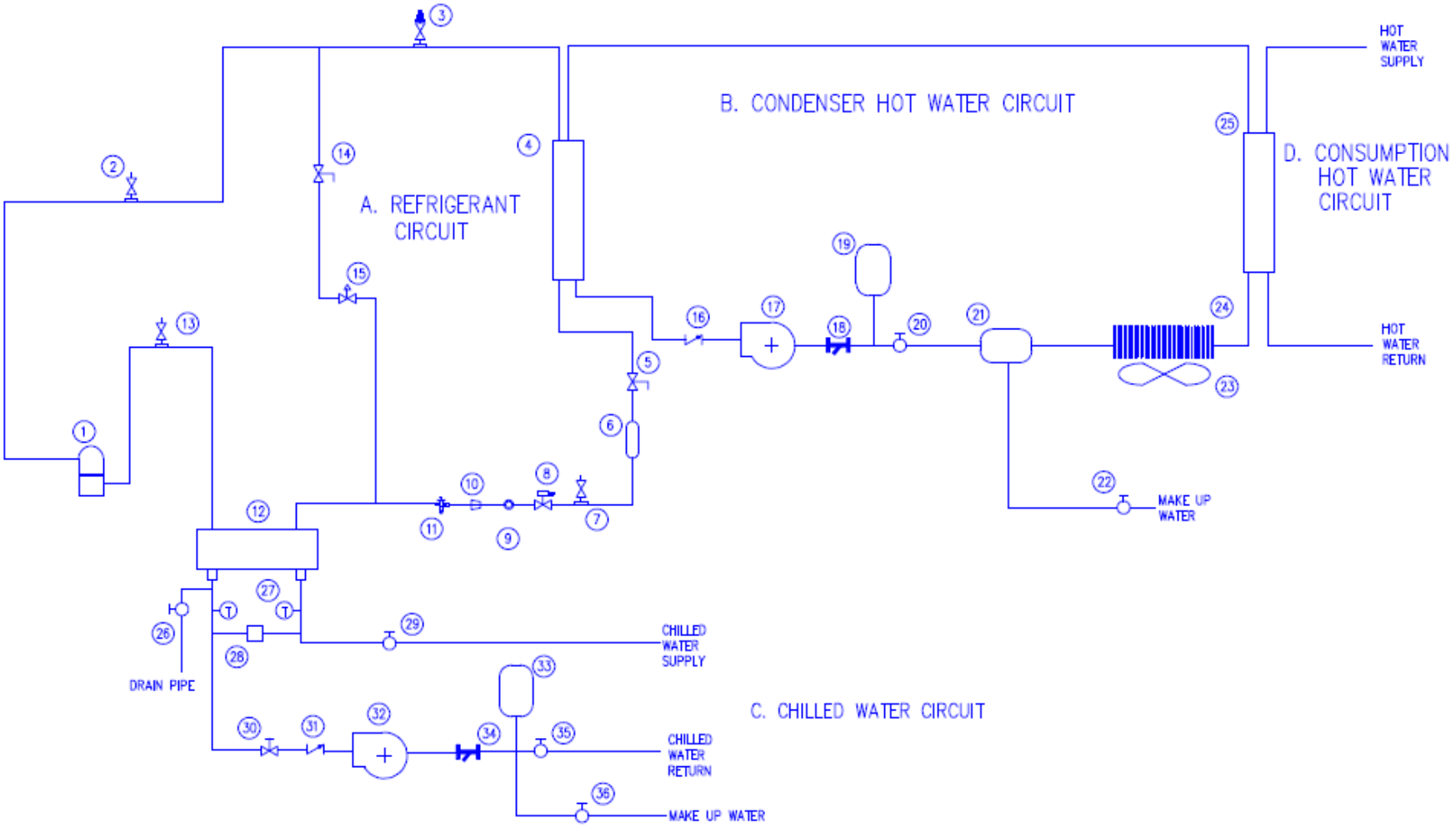
A. REFRIGERANT CIRCUIT
B. CONDENSER HOT WATER CIRCUIT
C. CHILLED WATER CIRCUIT
D. CONSUMPTION HOT WATER CIRCUIT
HOT WATER SUPPLY
HOT WATER RETURN
MAKE UP WATER
CHILLED WATER SUPPLY
CHILLED WATER RETURN
MAKE UP WATER
DRAIN PIPE
1
2
3
4
5
6
7
8
9
10
11
12
13
14
15
16
17
18
19
20
21
22
23
24
25
26
27
28
29
30
31
32
33
34
35
36