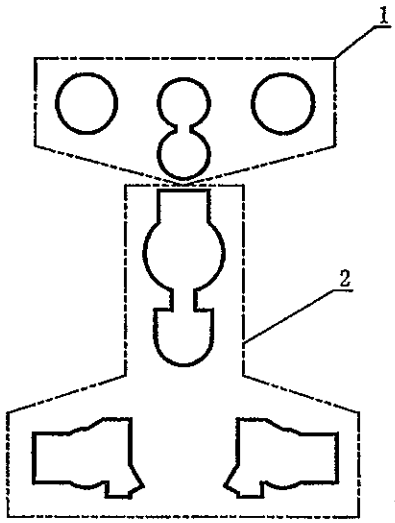

Fig. 1

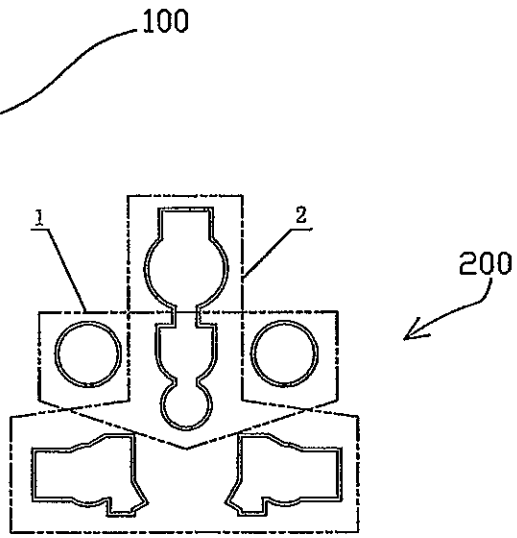

Fig. 2

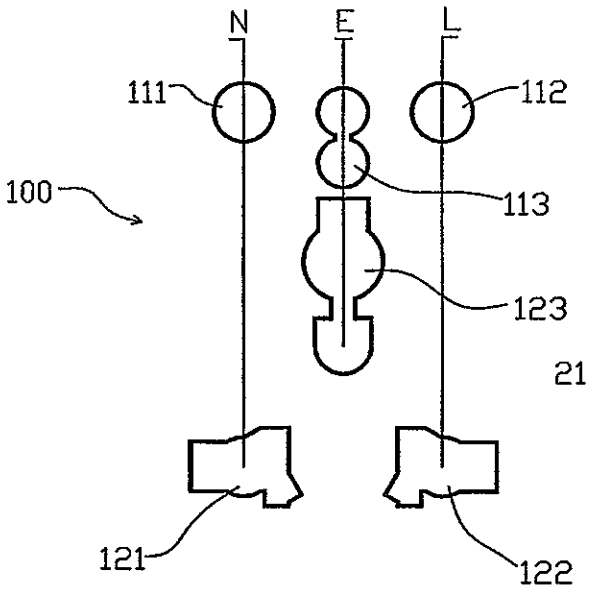

Fig. 1A

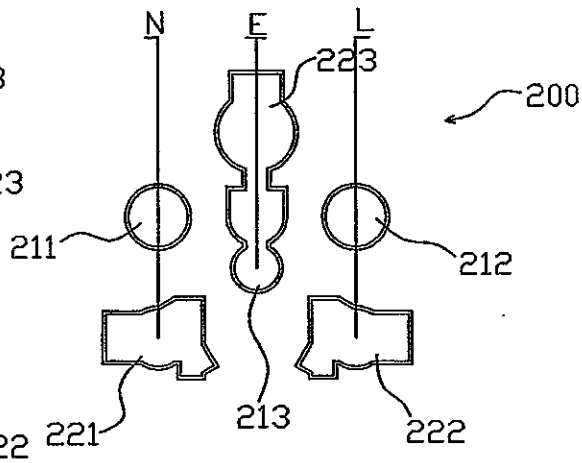

Fig. 2A

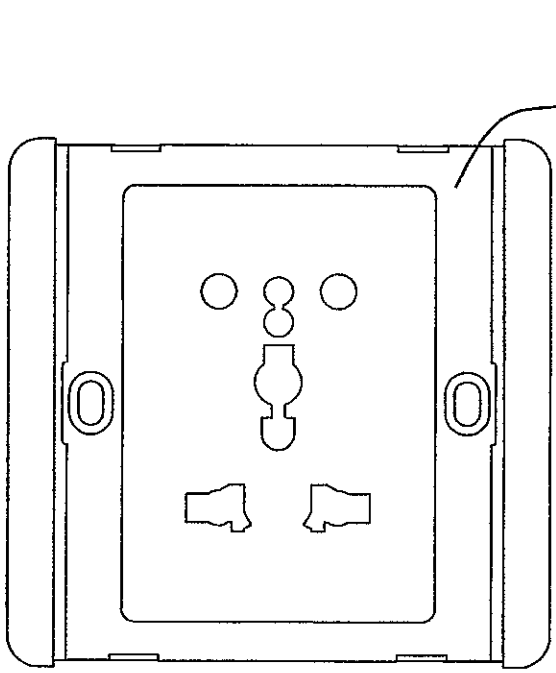

Fig. 3

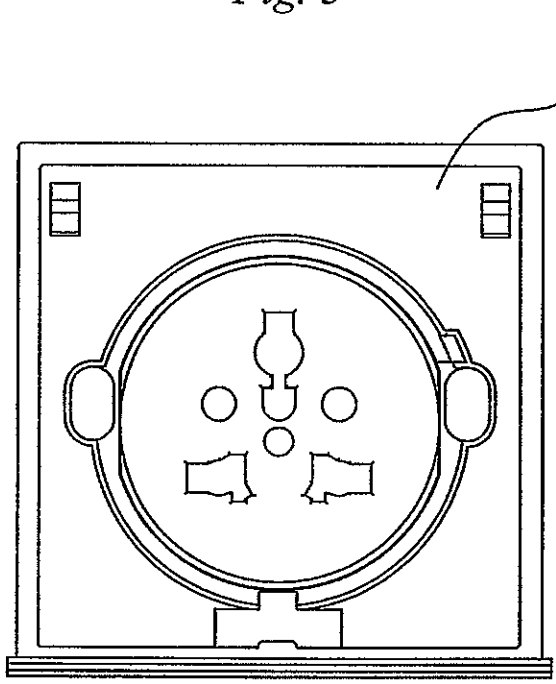

Fig. 4

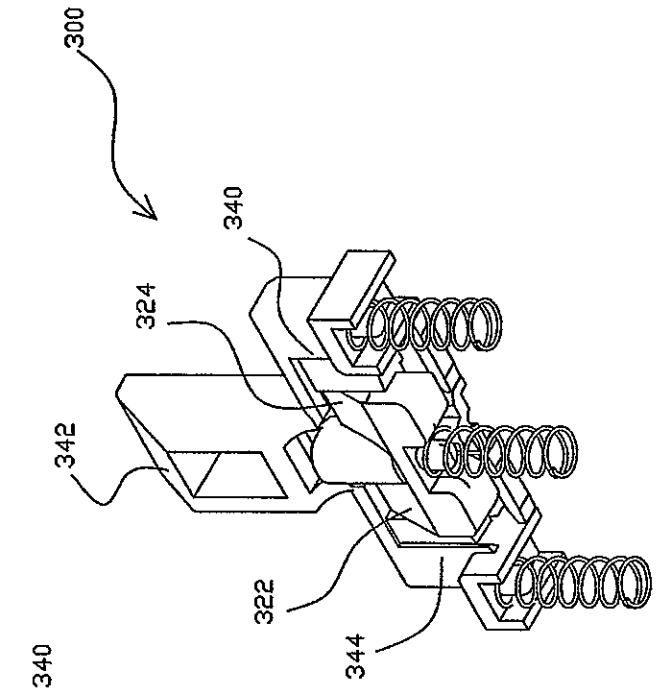

Fig. 5B

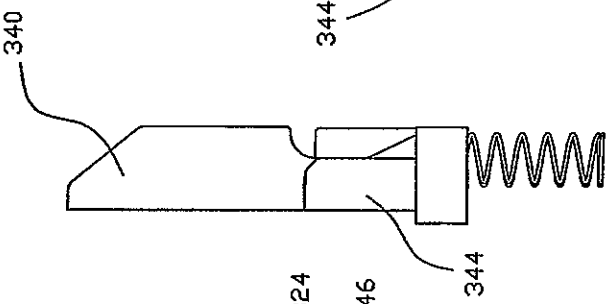

Fig. 5A

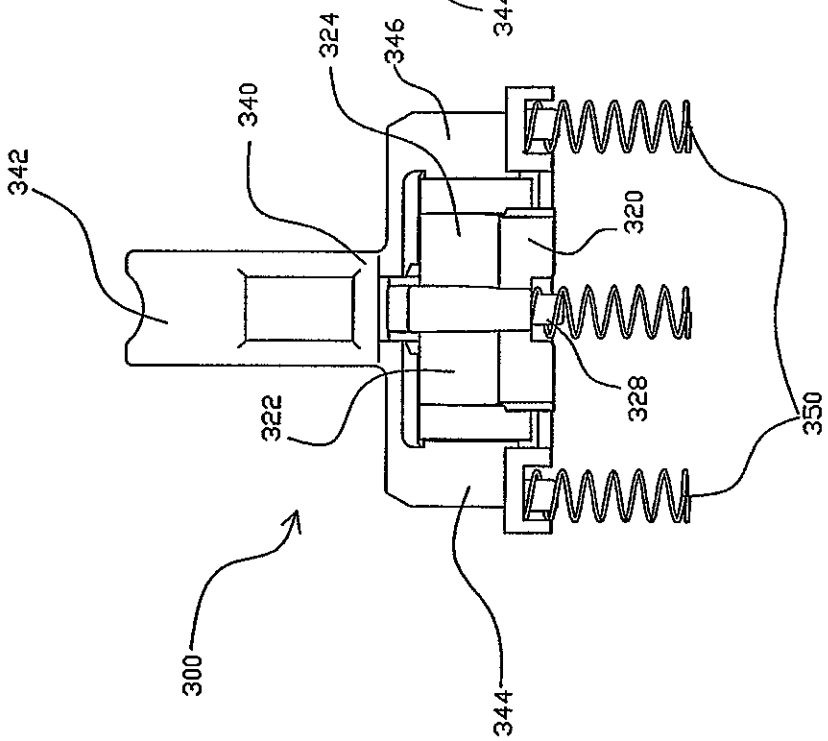

Fig. 5

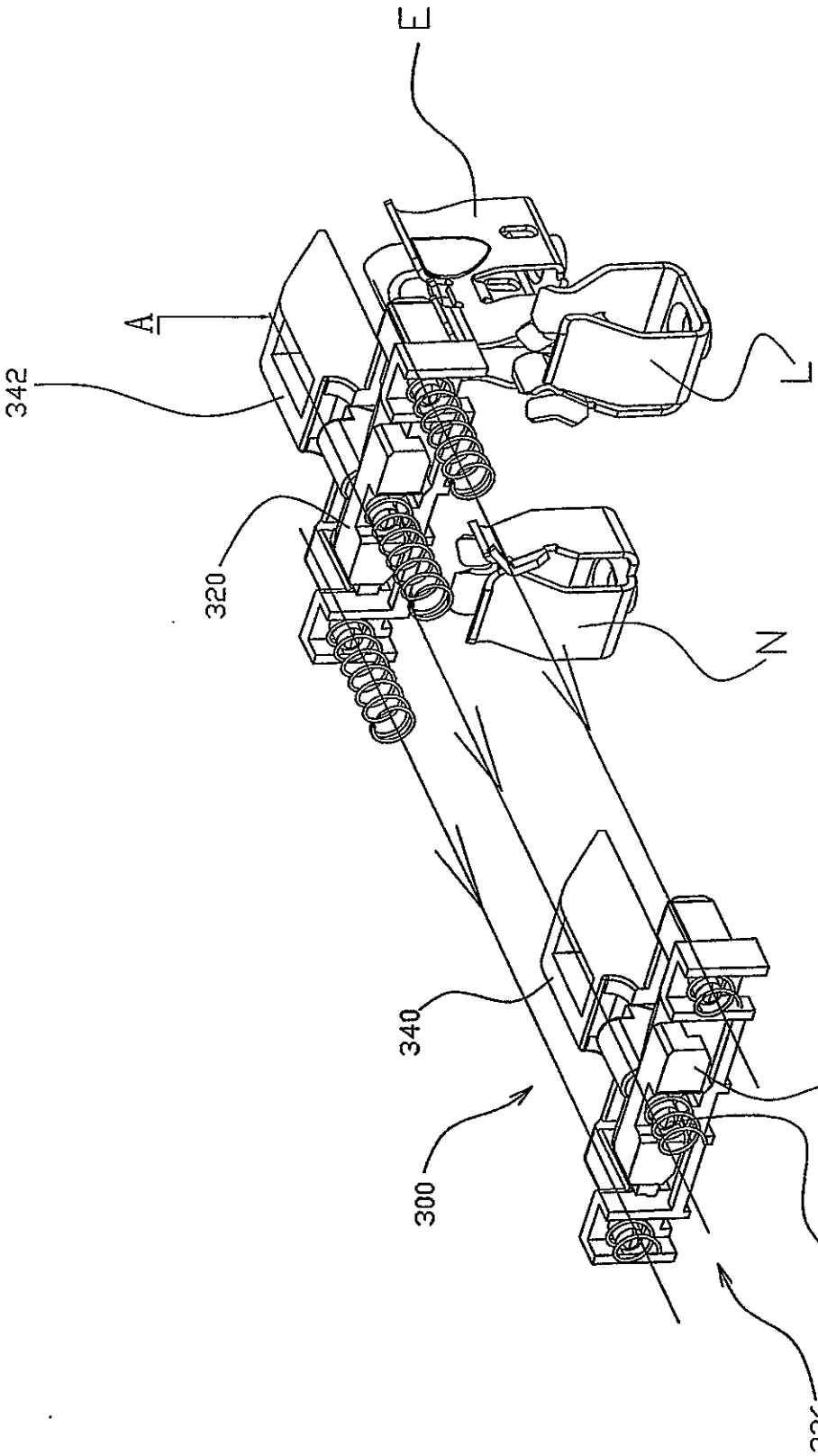

Fig. 6

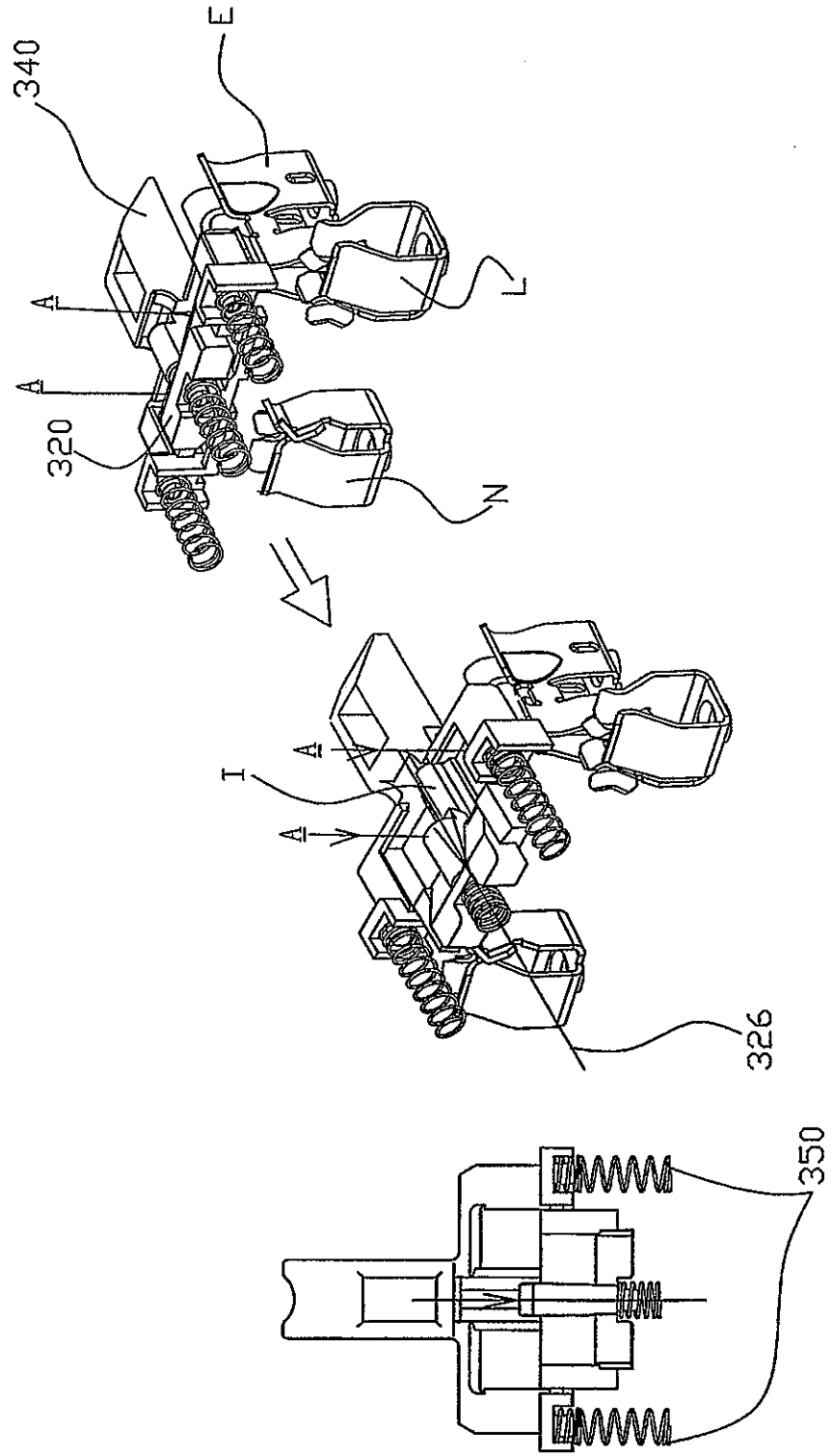

Fig. 7

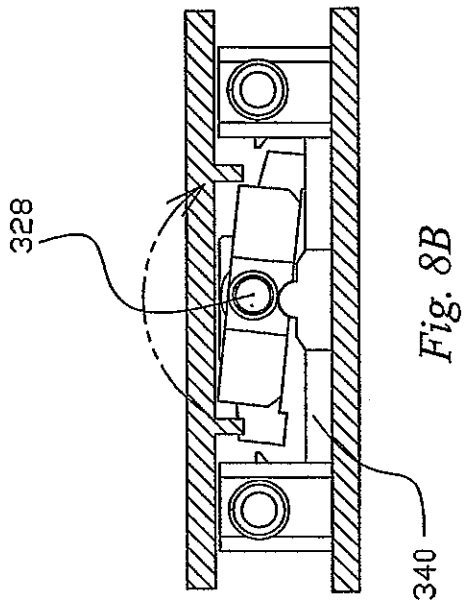

Fig. 8B

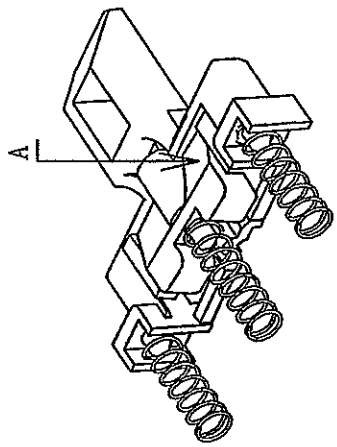

Fig. 8D

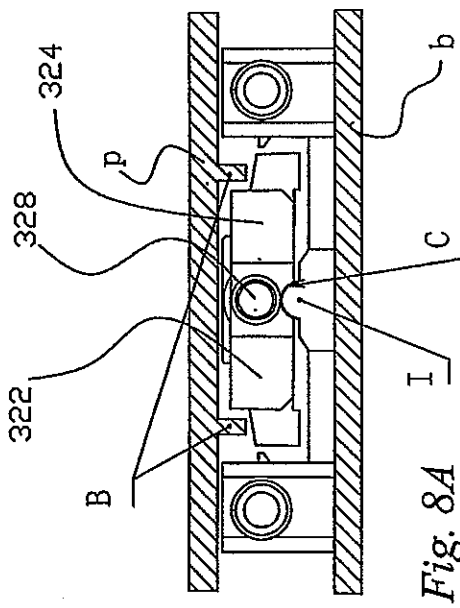

Fig. 8A

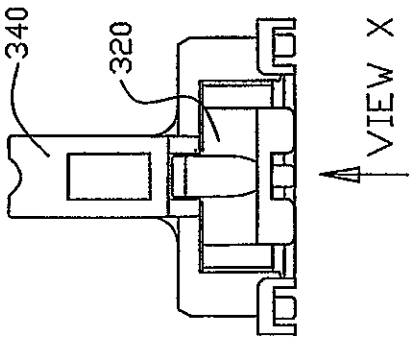

Fig. 8C

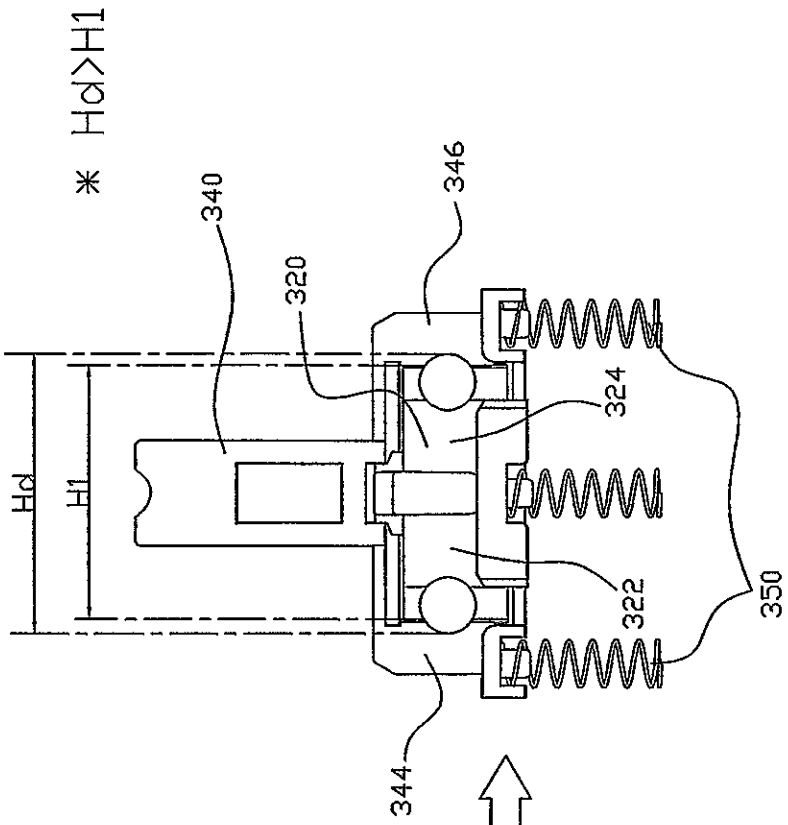

Fig. 9A

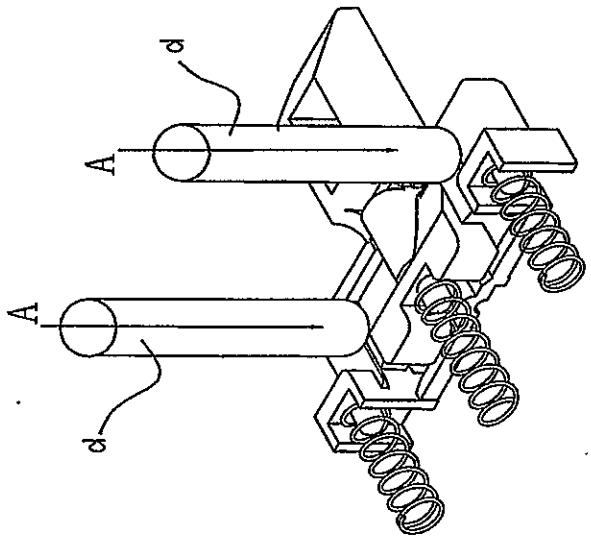

Fig. 9

Table A

No.	Type 1 Plugs	Corresponding Insertion	Countries	Plug Standard Reference	Rating
1	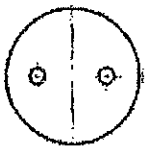	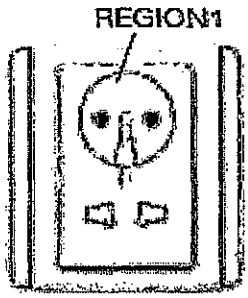	European	EN50075 VDE 0624	250V 10A
2		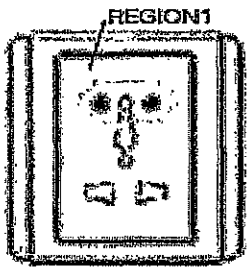	Switzerland Spain	SEV1011	250V 10A
3	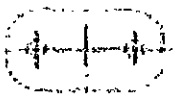	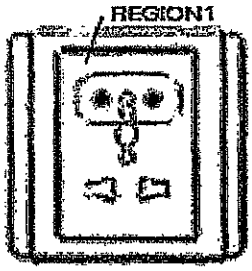	Italy Denmark	CEI 23-16	250V 10A
4	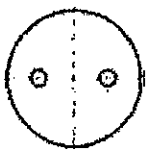	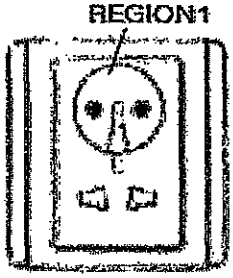	Denmark Belize Finland Sweden Norway Portugal Italy Poland Netherlands	CEE 7	250V 10A

5	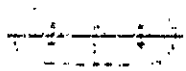	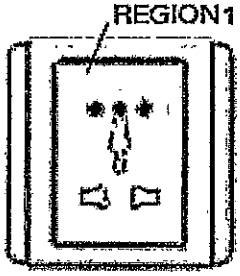	Italy	CEI 23-16	250V 10A
6		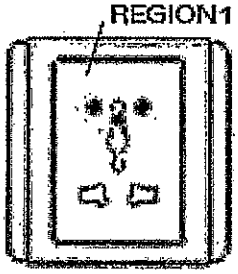	Switzerland Spain	SEV1011	250V 10A
7	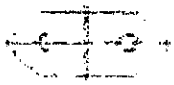	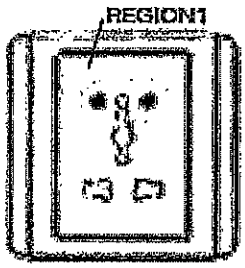	Denmark Finland Czech Republic France Germany Italy Norway Poland Netherlands Portugal Switzerland	EN50075	250V 2/5A

Table B

No.	Type 2 Plugs	Corresponding Insertion	Countries	Plugs Standard Reference	Rating
8	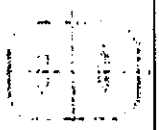	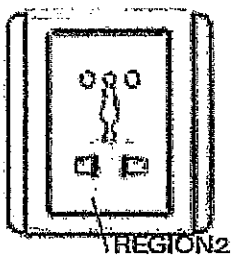	China	GB1002-96	250V 10A
9		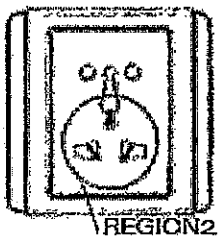	Australia New Zealand China	AS/NZS 3120 GB1002-96	250V 10A
10	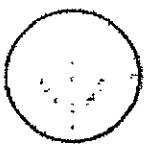	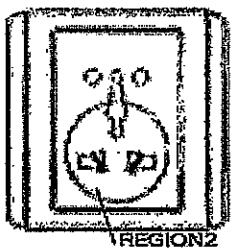	Australia New Zealand	AS/NZS 3112	250V 10A
11		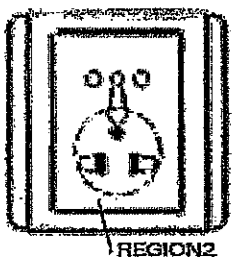	Thailand Philippines USA Canada Japan Taiwan	IEC60884-1	250V 10/16A

12	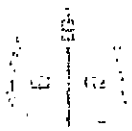	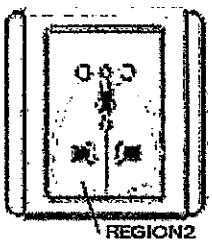	United Kingdom Hong Kong SAR Singapore Malaysia South Africa	BS1363	250V 13A
13	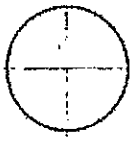	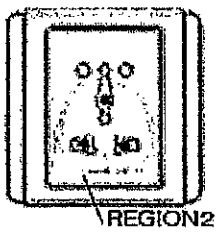	United Kingdom Hong Kong SAR South Africa	BS546	250V 5A