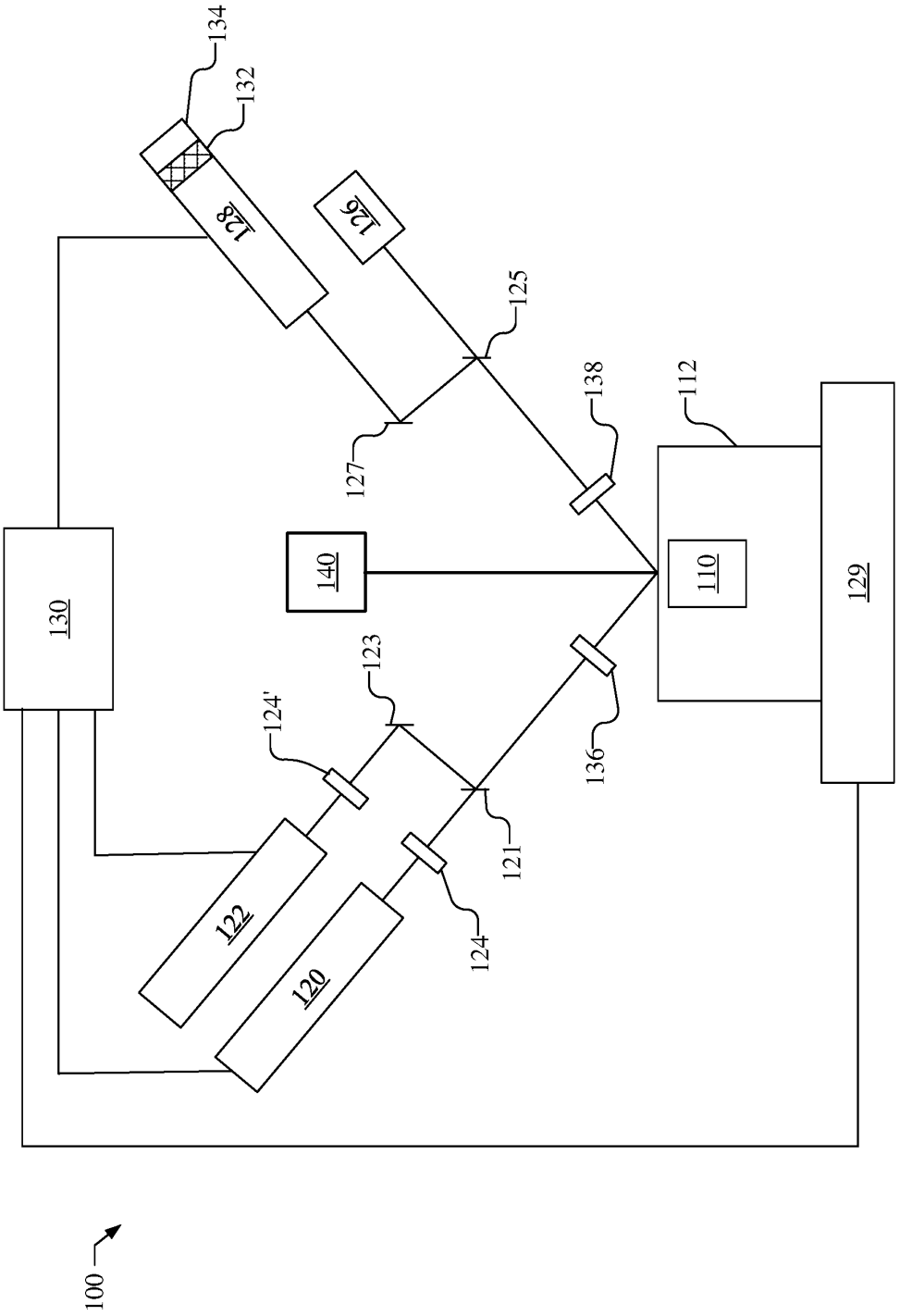
134
132
128
126
125
127
138
112
130
140
110
129
123
124'
136
121
122
124
120
100

FIG. 1

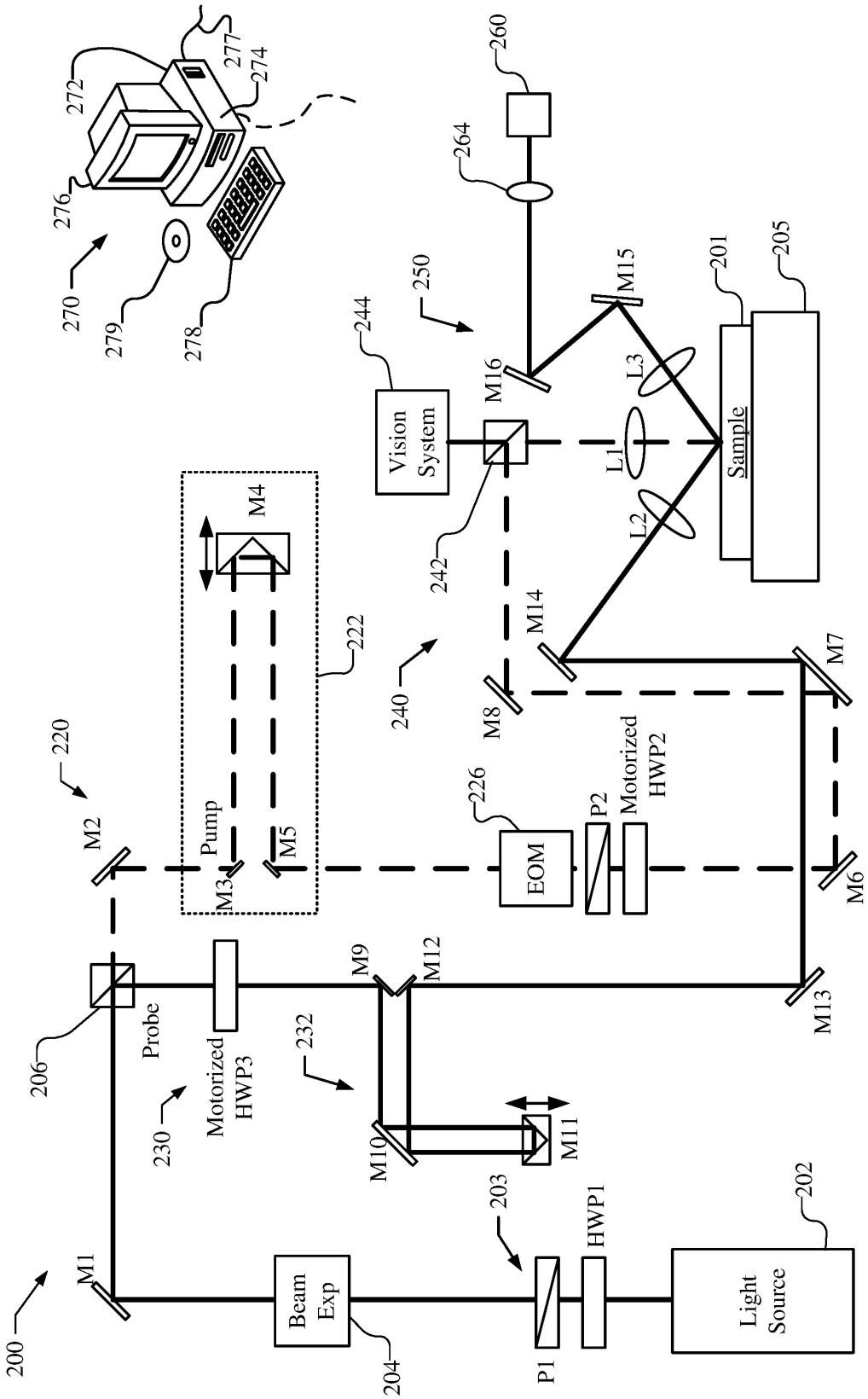
200
M1
Beam Exp
204
203
P1
HWP1
202
Light Source
M11
M10
232
M9
M12
M13
206
Probe
Motorized HWP3
230
220
M2
Pump
M3
M5
M4
222
240
M8
M14
M7
M6
226
EOM
P2
Motorized HWP2
242
244
Vision System
250
M16
L1
L2
L3
M15
Sample
201
205
264
260
270
279
278
272
276
277
274

FIG. 2

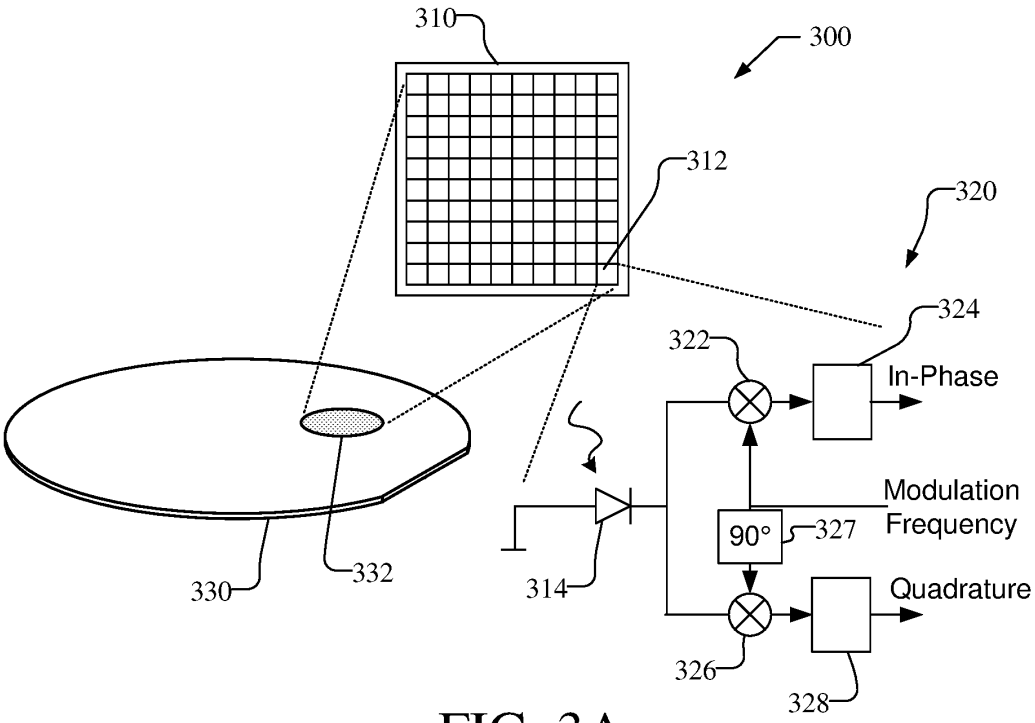
310
300
312
320
324
322
In-Phase
Modulation
Frequency
90°
327
Quadrature
330
332
314
326
328

FIG. 3A

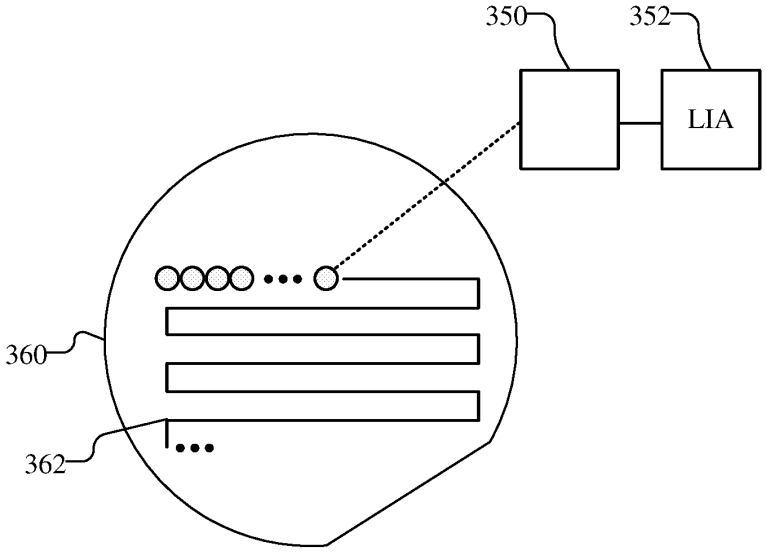
350
352
LIA
360
362

FIG. 3B

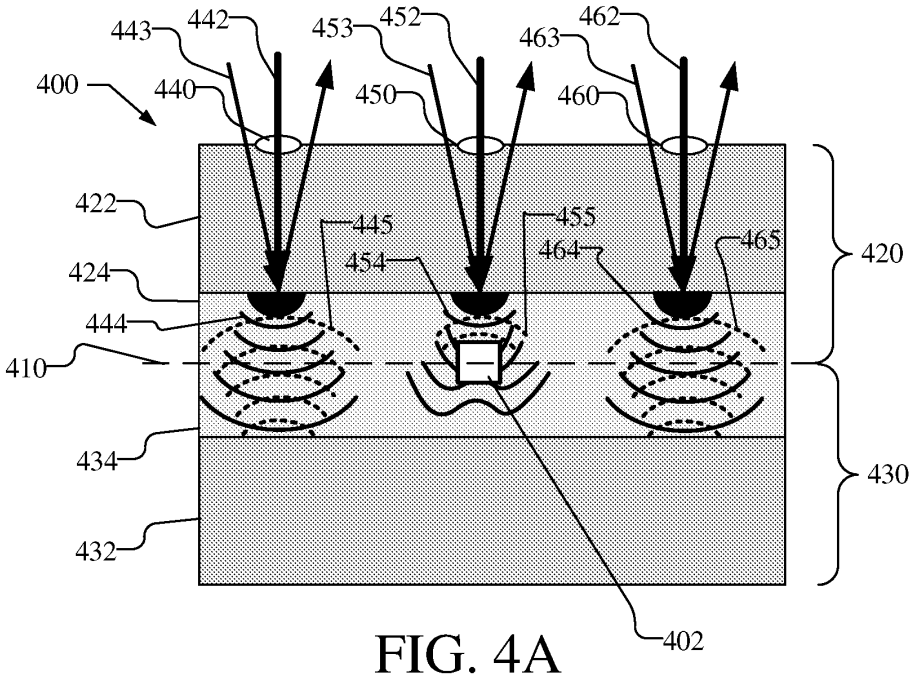
443
442
453
452
463
462
400
440
450
460
422
445
455
465
420
424
454
464
444
410
434
430
432
402

FIG. 4A

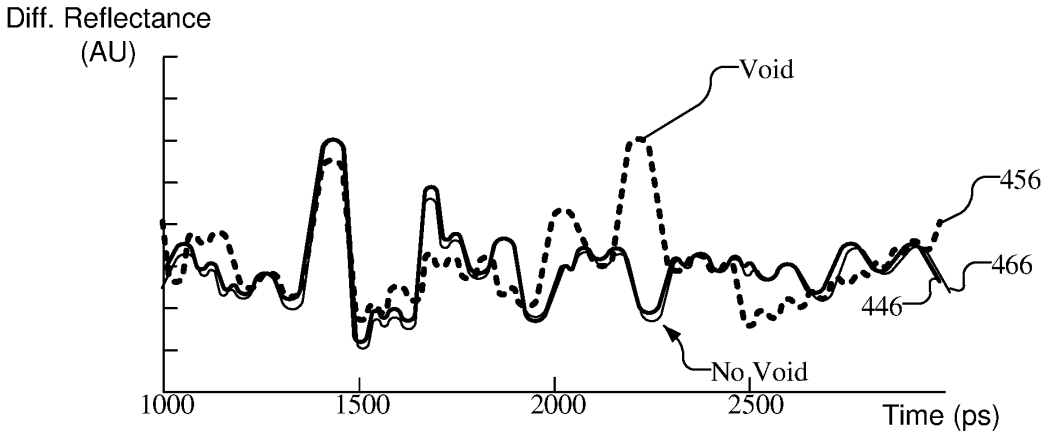
Diff. Reflectance
(AU)
Void
456
466
446
No Void
1000
1500
2000
2500
Time (ps)

FIG. 4B

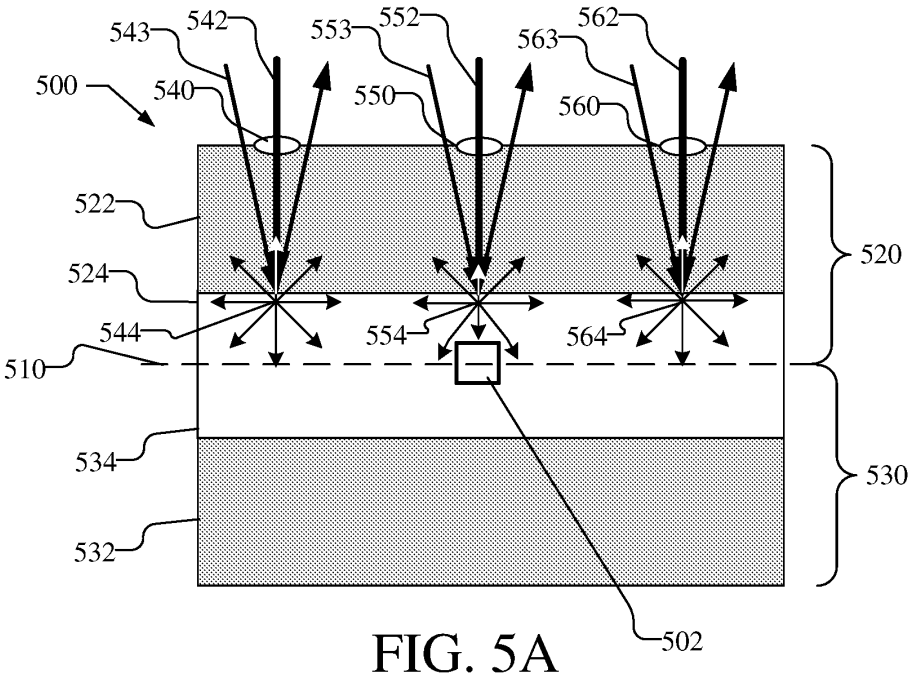
543
542
553
552
563
562
500
540
550
560
522
520
524
544
554
564
510
534
530
532
502

FIG. 5A

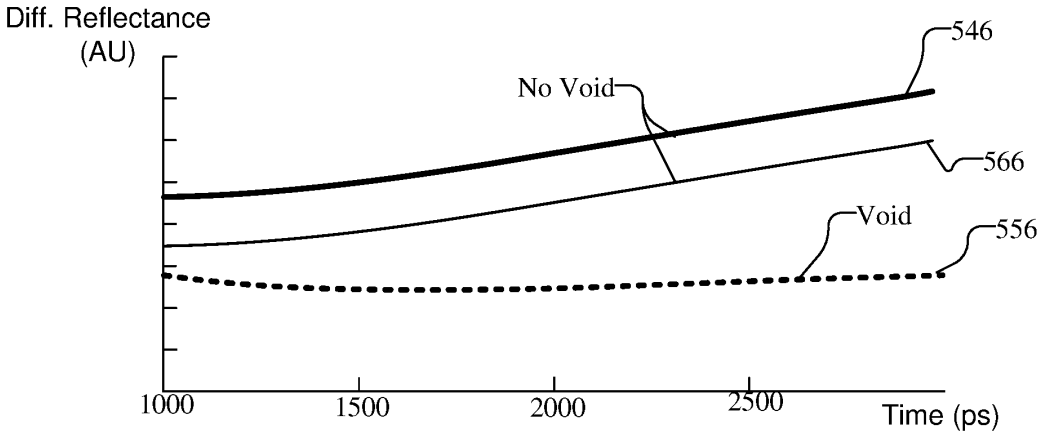
Diff. Reflectance
(AU)
546
No Void
566
Void
556
1000
1500
2000
2500
Time (ps)

FIG. 5B

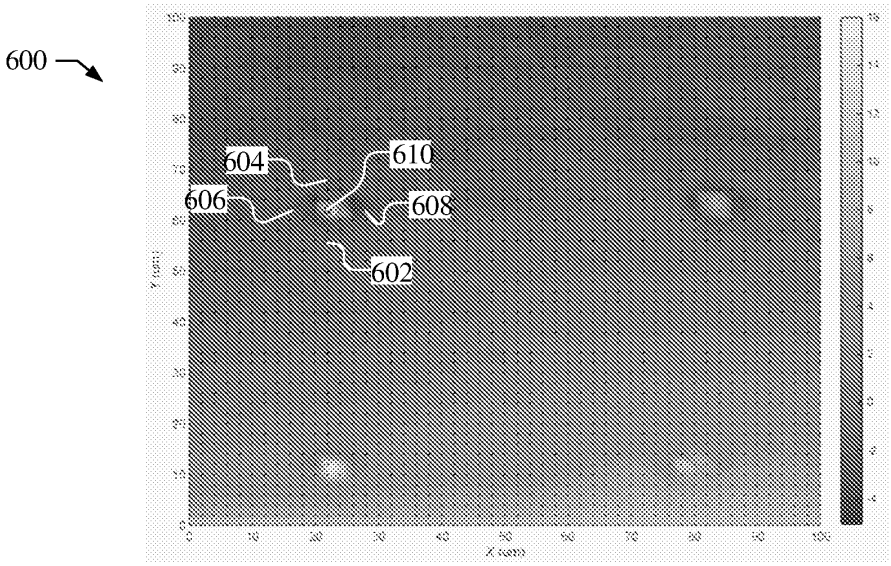
600
604
610
606
608
602

FIG. 6A

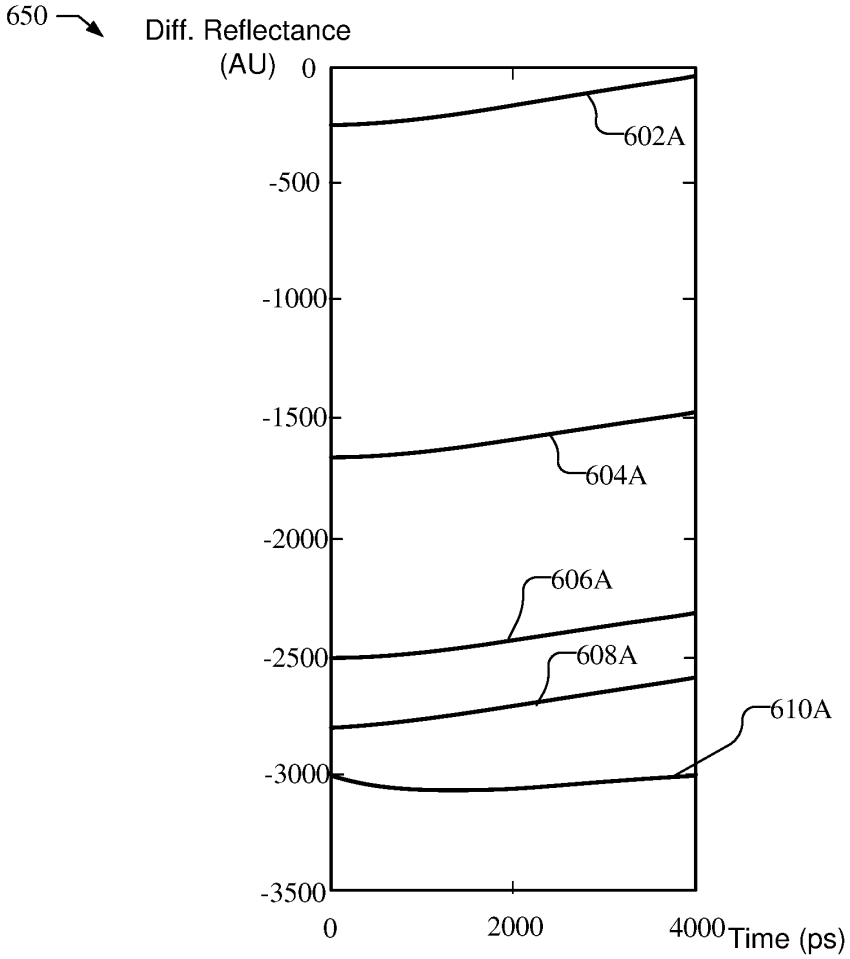
650
Diff. Reflectance
(AU)
0
-500
-1000
-1500
-2000
-2500
-3000
-3500
602A
604A
606A
608A
610A
0
2000
4000
Time (ps)

FIG. 6B

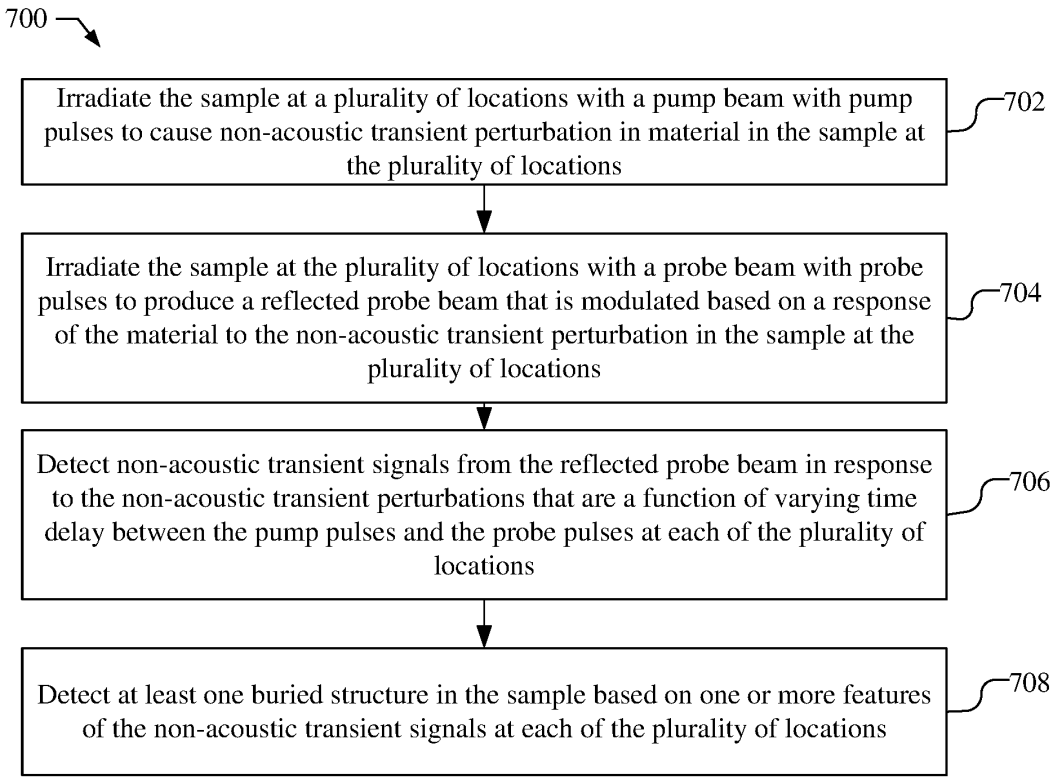
700
Irradiate the sample at a plurality of locations with a pump beam with pump pulses to cause non-acoustic transient perturbation in material in the sample at the plurality of locations
702
Irradiate the sample at the plurality of locations with a probe beam with probe pulses to produce a reflected probe beam that is modulated based on a response of the material to the non-acoustic transient perturbation in the sample at the plurality of locations
704
Detect non-acoustic transient signals from the reflected probe beam in response to the non-acoustic transient perturbations that are a function of varying time delay between the pump pulses and the probe pulses at each of the plurality of locations
706
Detect at least one buried structure in the sample based on one or more features of the non-acoustic transient signals at each of the plurality of locations
708

FIG. 7