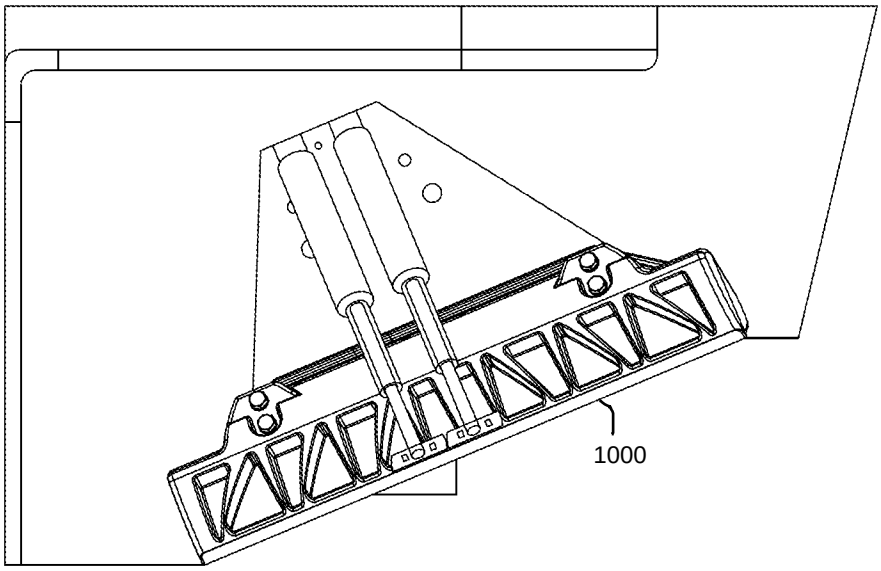

FIG. 1

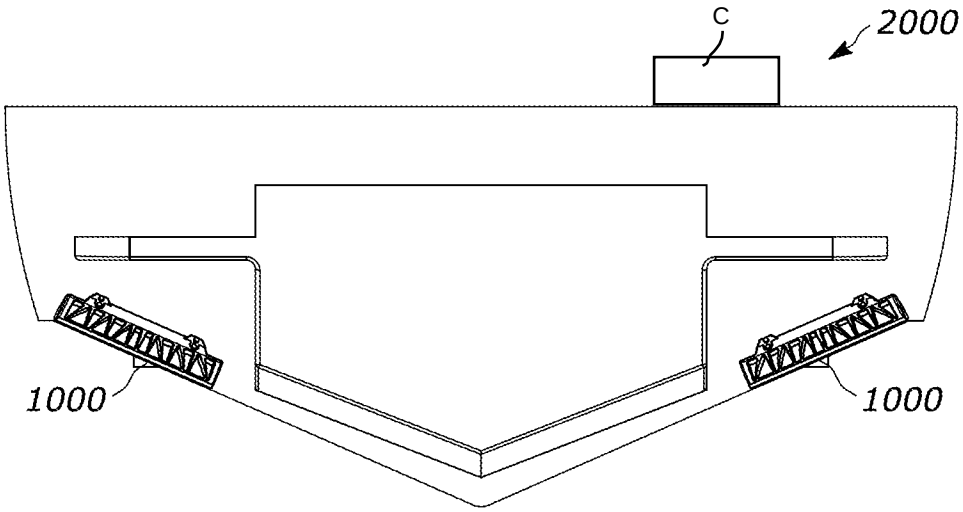

FIG. 2

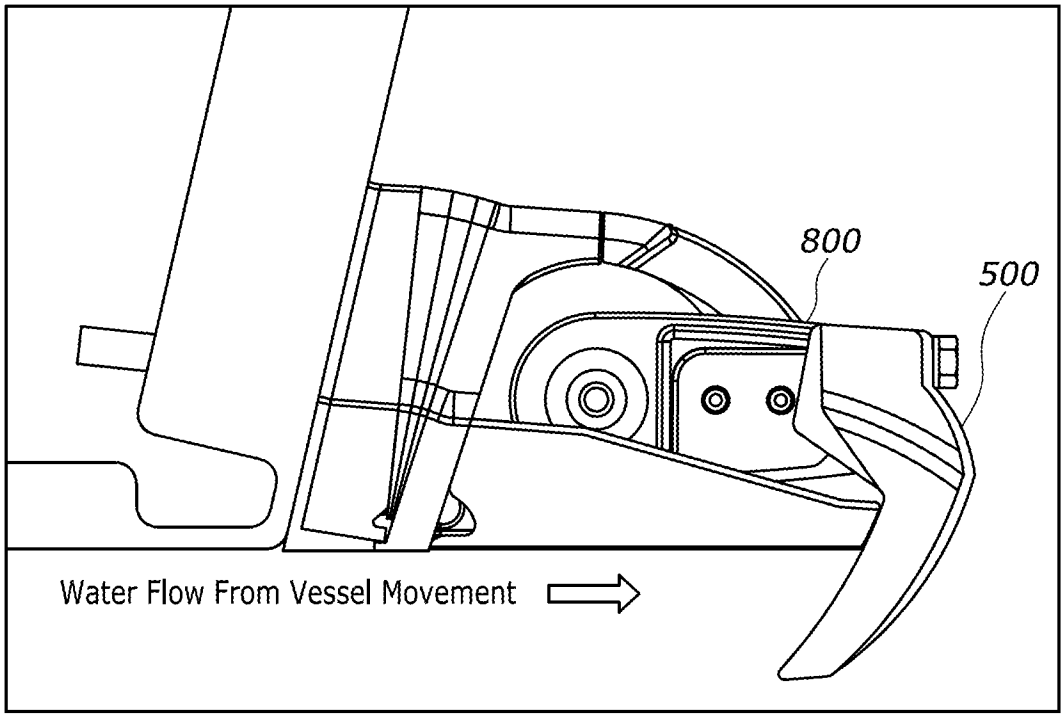
800
500
Water Flow From Vessel Movement

FIG. 3A

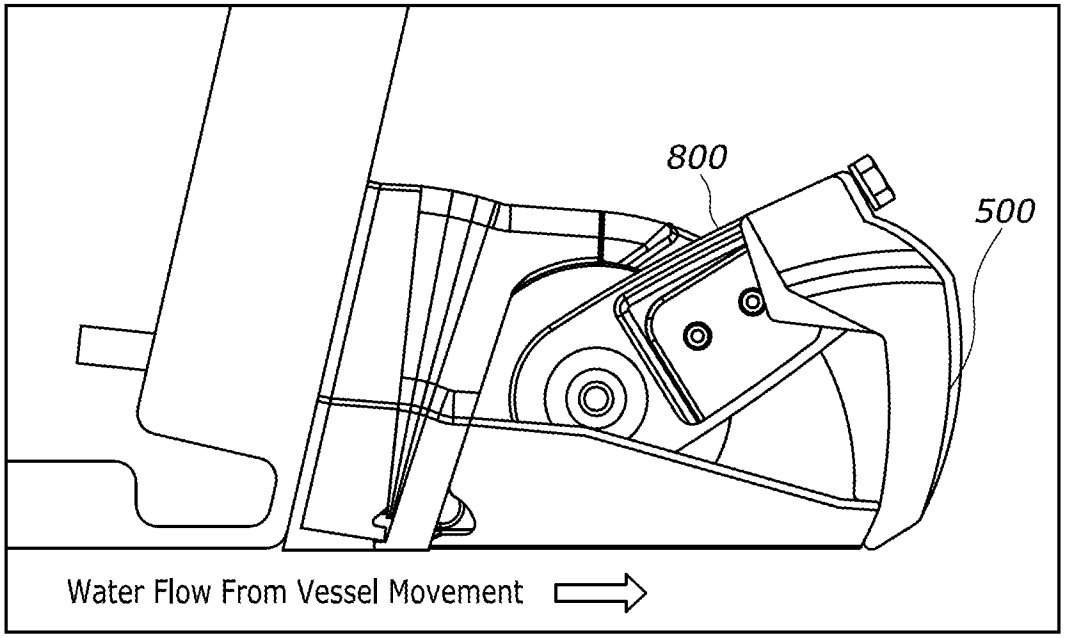
800
500
Water Flow From Vessel Movement

FIG. 3B

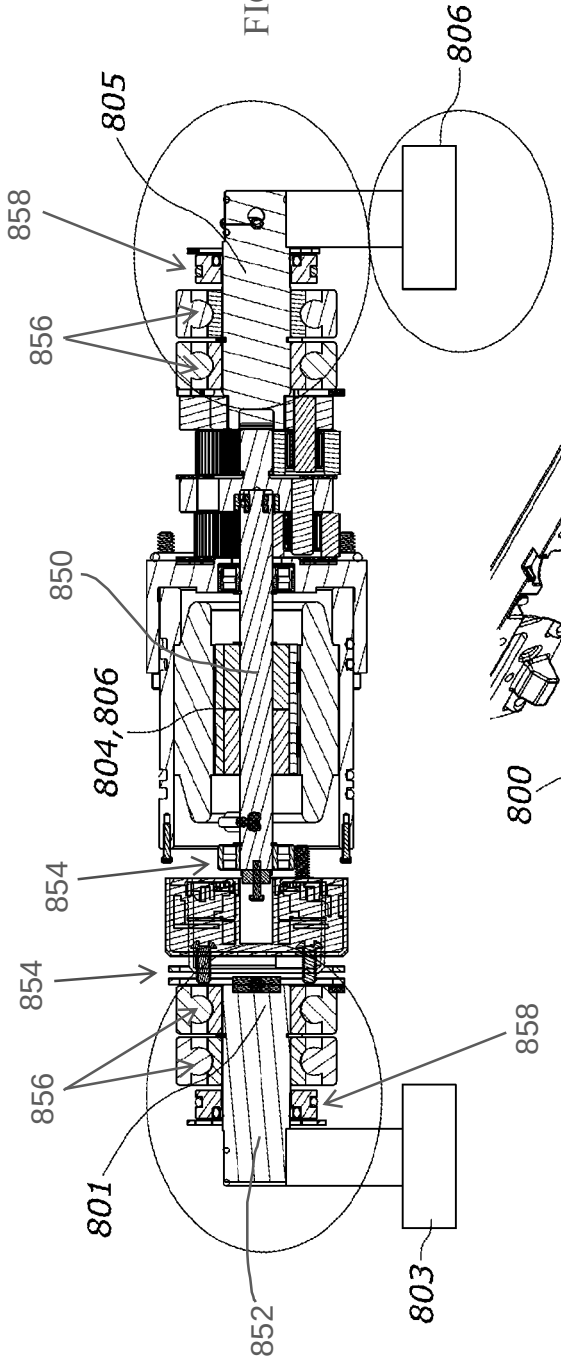
805
806
858
856
850
804,806
854
854
856
858
801
852
803

FIG. 4A

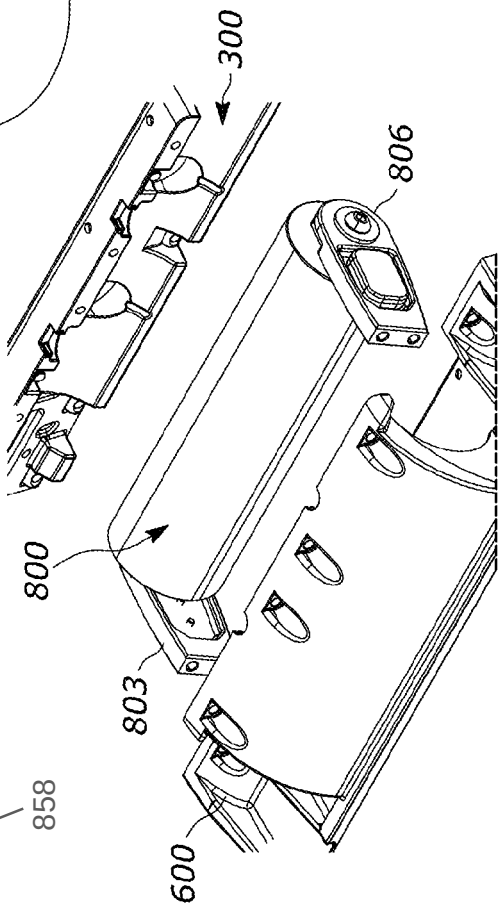
300
806
800
803
600

FIG. 4B

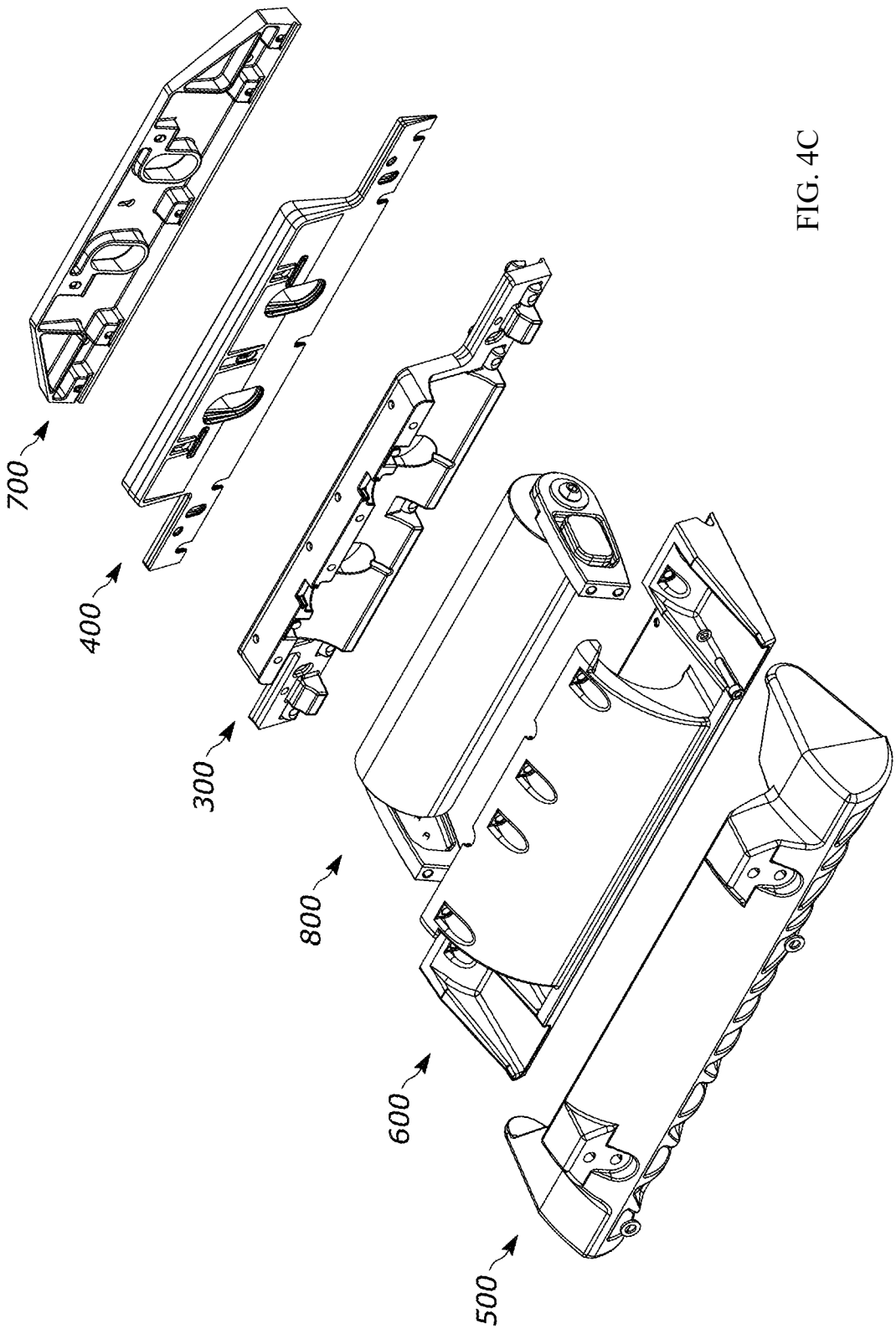

FIG. 4C

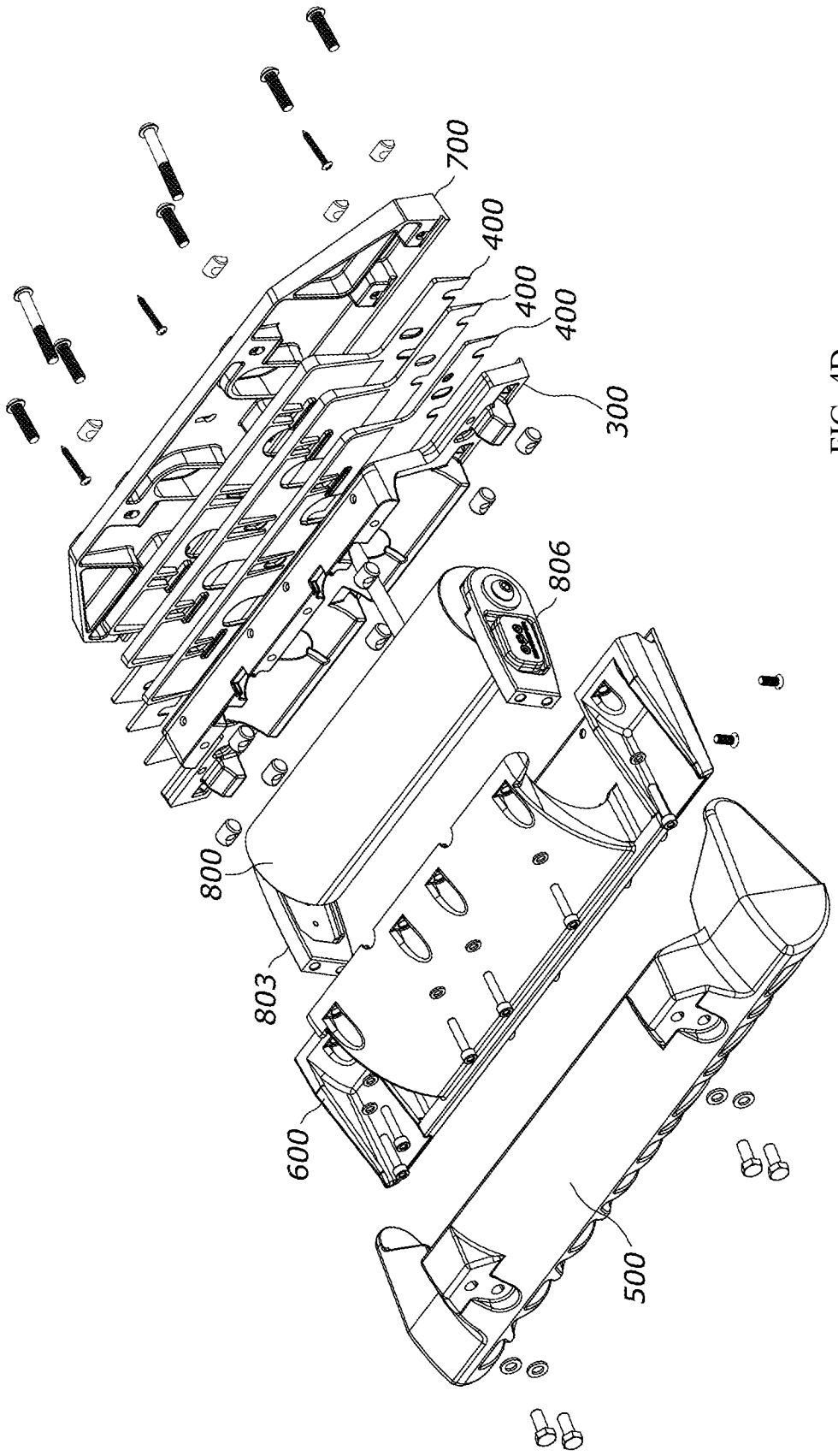

FIG. 4D

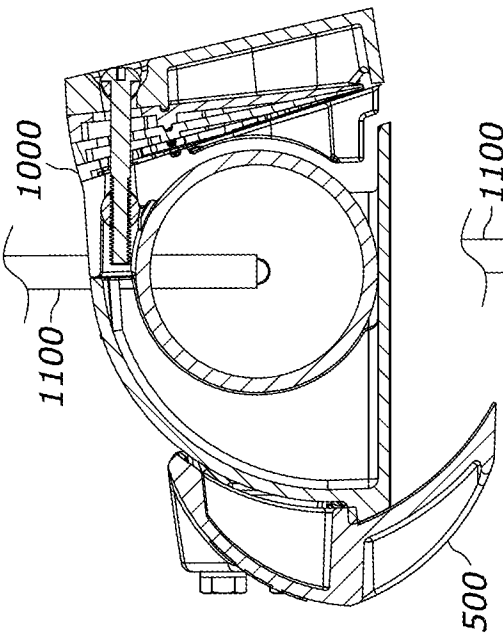

FIG. 5A

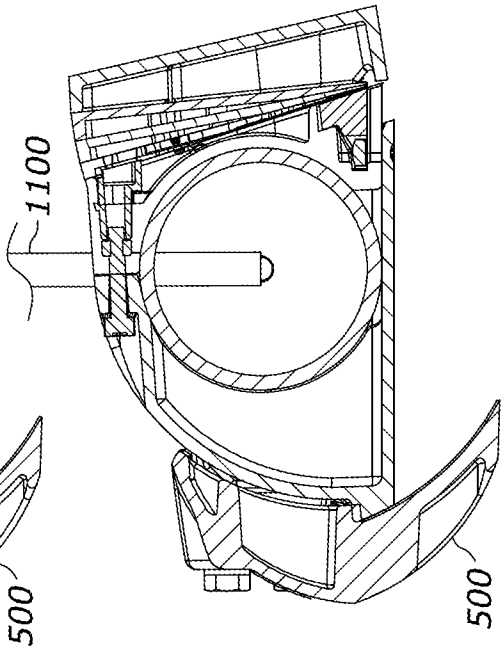

FIG. 5C

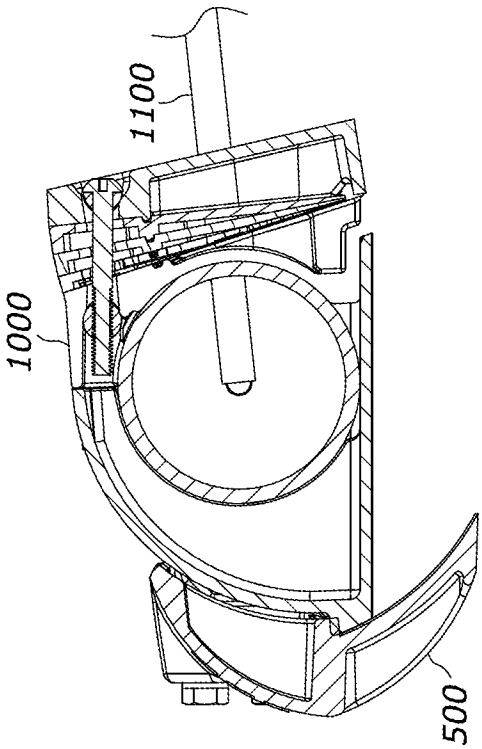

FIG. 5B

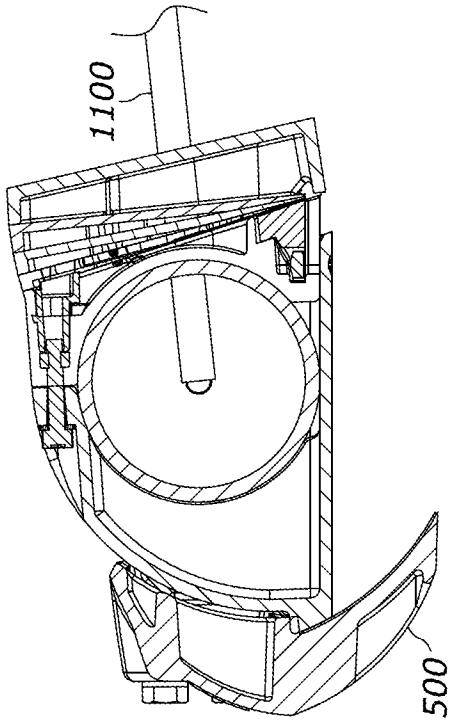

FIG. 5D

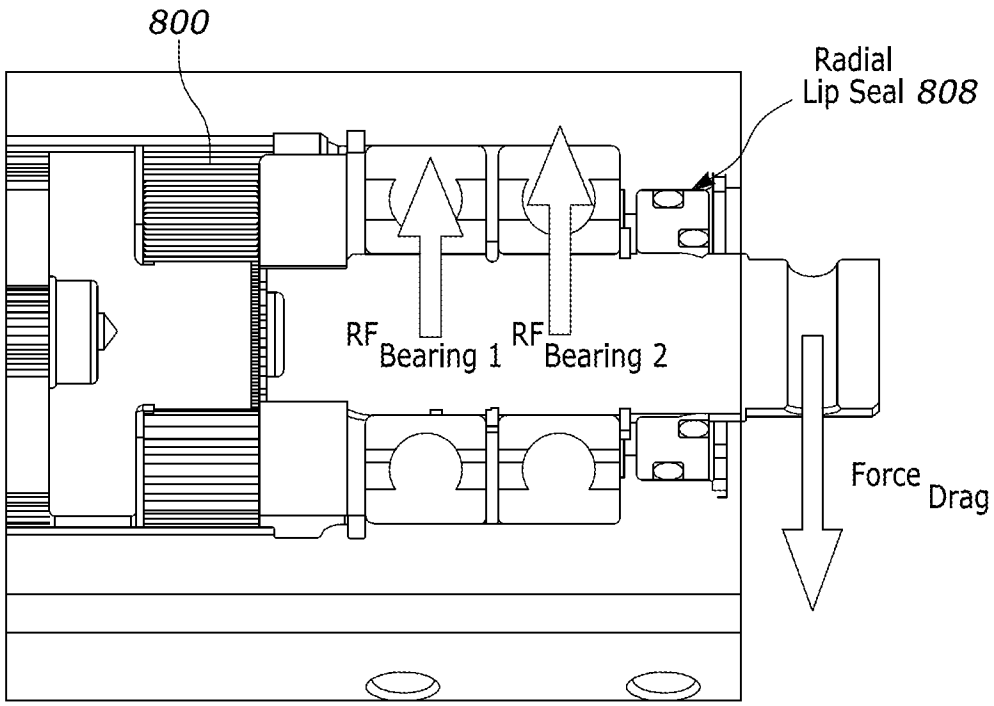

FIG. 6