(12) INTERNATIONAL APPLICATION PUBLISHED UNDER THE PATENT COOPERATION TREATY (PCT)

(19) World Intellectual Property Organization
International Bureau

(43) International Publication Date
11 August 2005 (11.08.2005)

PCT

(10) International Publication Number
WO 2005/072500 A2

(51) International Patent Classification: Not classified

(21) International Application Number:
PCT/US2005/000899

(22) International Filing Date: 12 January 2005 (12.01.2005)

(25) Filing Language: English

(26) Publication Language: English

(30) Priority Data:
10/759,646 16 January 2004 (16.01.2004) US

(71) Applicant *(for all designated States except US)*: **AGILENT TECHNOLOGIES, INC.** [US/US]; 395 Page Mill Road, Palo Alto, CA 94306 (US).

(72) Inventors: **XIE, Tong**; 4022 Lylewood Court, San Jose, CA 95121 (US). **BANEY, Douglas, M.**; 897 Clinton Road, Los Altos, Ca 94024 (US). **DEPUE, Marshall, T.**; 7 DeSabla Road, #25, San Mateo, CA 94402 (US).

(74) Agent: **KRAUSE-POLSTORFF, Juergen**; Agilent Technologies, Inc., Intellectual Property Administration, M/S DL429, P.O. Box 7599, Loveland, CO 80537-0599 (US).

(81) Designated States *(unless otherwise indicated, for every kind of national protection available)*: AE, AG, AL, AM, AT, AU, AZ, BA, BB, BG, BR, BW, BY, BZ, CA, CH, CN, CO, CR, CU, CZ, DE, DK, DM, DZ, EC, EE, EG, ES, FI, GB, GD, GE, GH, GM, HR, HU, ID, IL, IN, IS, JP, KE, KG, KP, KR, KZ, LC, LK, LR, LS, LT, LU, LV, MA, MD, MG, MK, MN, MW, MX, MZ, NA, NI, NO, NZ, OM, PG, PH, PL, PT, RO, RU, SC, SD, SE, SG, SK, SL, SY, TJ, TM, TN, TR, TT, TZ, UA, UG, US, UZ, VC, VN, YU, ZA, ZM, ZW.

(84) Designated States *(unless otherwise indicated, for every kind of regional protection available)*: ARIPO (BW, GH, GM, KE, LS, MW, MZ, NA, SD, SL, SZ, TZ, UG, ZM, ZW), Eurasian (AM, AZ, BY, KG, KZ, MD, RU, TJ, TM), European (AT, BE, BG, CH, CY, CZ, DE, DK, EE, ES, FI,

[Continued on next page]

(54) Title: POSITION DETERMINATION AND MOTION TRACKING

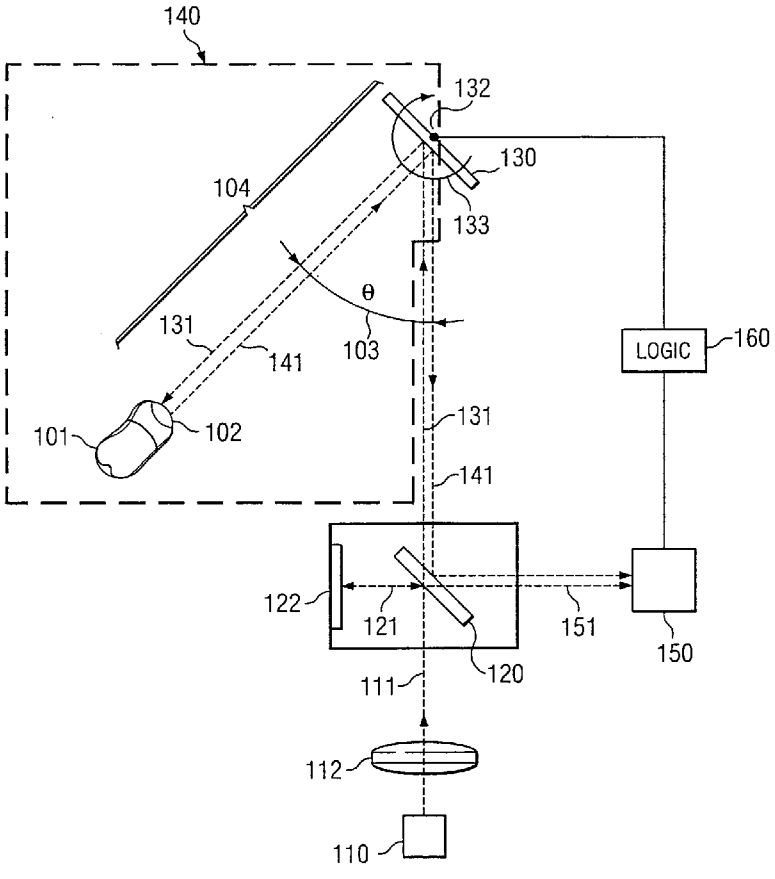

(57) Abstract: Systems and methods for position determination and motion tracking for use in a processor based system (301). Embodiments may incorporate a redirector (130) that moves in at least one direction (133) about a fixed point (132), an object (101) operable to reflect a search beam (131) as a location beam (141), logic (160) operable to determine at least one angle of position (103) for the object from the orientation of the redirector, and logic (160) operable to determine a distance (104) of the object from a fixed point (132).

WO 2005/072500 A2

FR, GB, GR, HU, IE, IS, IT, LT, LU, MC, NL, PL, PT, RO, SE, SI, SK, TR), OAPI (BF, BJ, CF, CG, CI, CM, GA, GN, GQ, GW, ML, MR, NE, SN, TD, TG).

Published:

— *without international search report and to be republished upon receipt of that report*

For two-letter codes and other abbreviations, refer to the "Guidance Notes on Codes and Abbreviations" appearing at the beginning of each regular issue of the PCT Gazette.