(12) INTERNATIONAL APPLICATION PUBLISHED UNDER THE PATENT COOPERATION TREATY (PCT)

(19) World Intellectual Property Organization
International Bureau

(43) International Publication Date
7 October 2010 (07.10.2010)

PCT

(10) International Publication Number
WO 2010/114983 A1

(51) International Patent Classification:
F16L 33/18 (2006.01)

(21) International Application Number:
PCT/US2010/029598

(22) International Filing Date:
1 April 2010 (01.04.2010)

(25) Filing Language: English

(26) Publication Language: English

(30) Priority Data:
61/165,985 2 April 2009 (02.04.2009) US

(71) Applicant *(for all designated States except US)*: **VICTAULIC COMPANY**; 4901 Kesslersville Road, Easton, PA 18040 (US).

(72) Inventors; and

(75) Inventors/Applicants *(for US only)*: **CYGLER, Frank, J., III** [US/US]; 5709 Kesslersville Road, Nazareth, PA 18064 (US). **HENRY, Vance, W.** [US/US]; 720 Maple Lane, Easton, PA 18045 (US). **BOWMAN, Matthew, A.** [US/US]; 2215 Donald Street, Palmer, PA 18045 (US). **WILK, Charles, E., Jr.** [US/US]; 6447 Woodbury Drive, Slatington, PA 18080 (US). **MADARA, Scott, D.** [US/US]; 309 Meyer Road, Nazareth, PA 18064 (US).

(74) Agents: **CHIONCHIO, John, A.** et al.; Ballard Spahr LLP, 999 Peachtree Street, Suite 1000, Atlanta, GA 30309 (US).

(81) Designated States *(unless otherwise indicated, for every kind of national protection available)*: AE, AG, AL, AM, AO, AT, AU, AZ, BA, BB, BG, BH, BR, BW, BY, BZ, CA, CH, CL, CN, CO, CR, CU, CZ, DE, DK, DM, DO, DZ, EC, EE, EG, ES, FI, GB, GD, GE, GH, GM, GT, HN, HR, HU, ID, IL, IN, IS, JP, KE, KG, KM, KN, KP, KR, KZ, LA, LC, LK, LR, LS, LT, LU, LY, MA, MD, ME, MG, MK, MN, MW, MX, MY, MZ, NA, NG, NI, NO, NZ, OM, PE, PG, PH, PL, PT, RO, RS, RU, SC, SD, SE, SG, SK, SL, SM, ST, SV, SY, TH, TJ, TM, TN, TR, TT, TZ, UA, UG, US, UZ, VC, VN, ZA, ZM, ZW.

(84) Designated States *(unless otherwise indicated, for every kind of regional protection available)*: ARIPO (BW, GH, GM, KE, LR, LS, MW, MZ, NA, SD, SL, SZ, TZ, UG, ZM, ZW), Eurasian (AM, AZ, BY, KG, KZ, MD, RU, TJ, TM), European (AT, BE, BG, CH, CY, CZ, DE, DK, EE, ES, FI, FR, GB, GR, HR, HU, IE, IS, IT, LT, LU, LV, MC, MK, MT, NL, NO, PL, PT, RO, SE, SI, SK, SM, TR), OAPI (BF, BJ, CF, CG, CI, CM, GA, GN, GQ, GW, ML, MR, NE, SN, TD, TG).

Published:

— *with international search report (Art. 21(3))*

— *before the expiration of the time limit for amending the claims and to be republished in the event of receipt of amendments (Rule 48.2(h))*

(54) Title: CRIMP-TYPE COUPLING, CRIMPING TOOL, AND METHOD OF CRIMPING

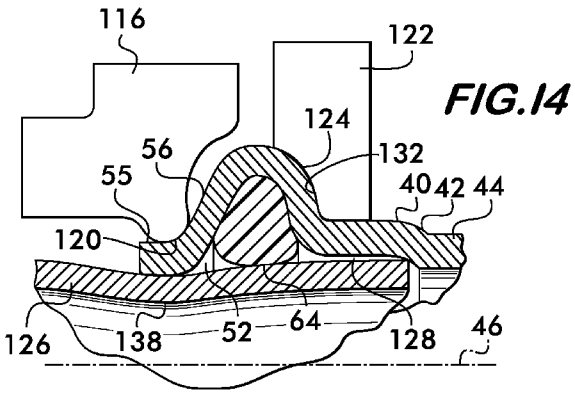

FIG.14

(57) Abstract: A coupling installed by crimping has an angularly oriented conical surface at an open end surrounded by a ring which receives a pipe element. Dies move radially toward the coupling on jaws of a crimping tool and engage the conical surface along a single line of contact to effect a crimp which secures the coupling to the pipe. The radially applied force has radial and axial components. The radial component effects the crimp, the axial component deforms a channel in the coupling in which a seal is located. The seal is deformed between the coupling and the pipe to effect a fluid tight joint. The coupling may have a circumferential rib which projects radially outwardly. Registration dogs engage the coupling and provide a reaction surface against the axial force component.

WO 2010/114983 A1