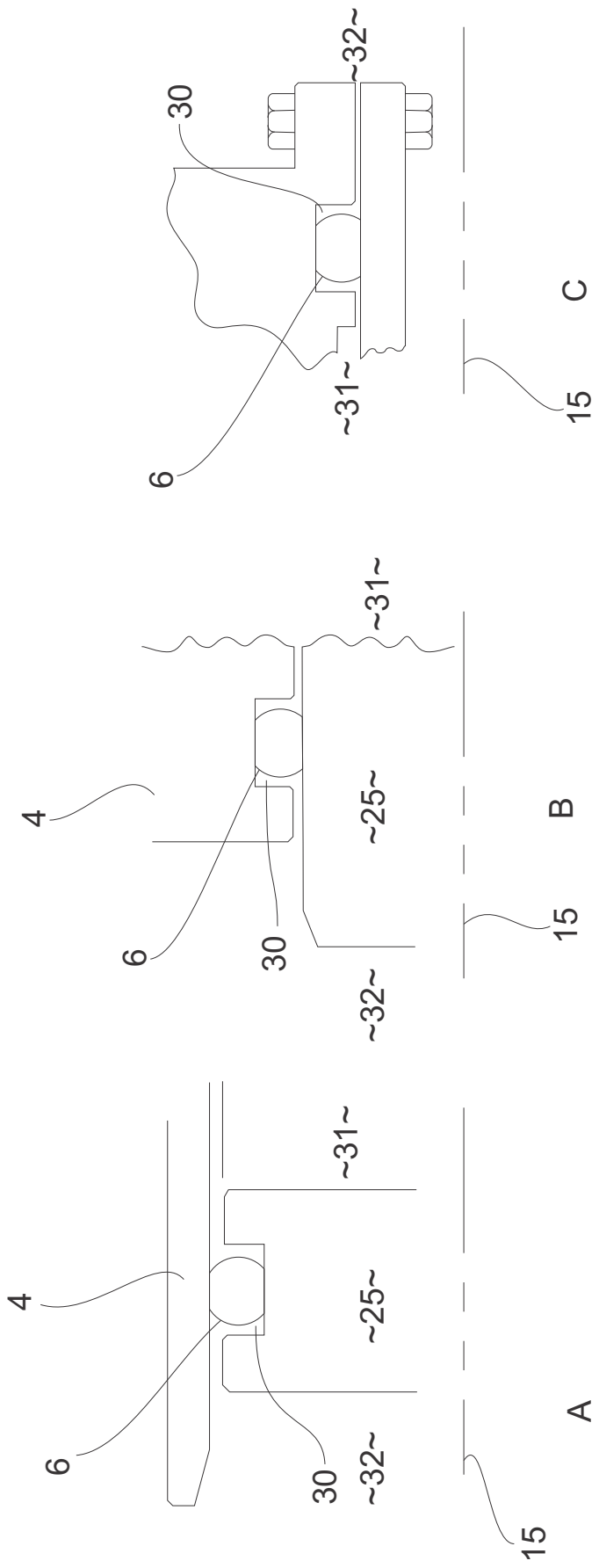

Figure 1

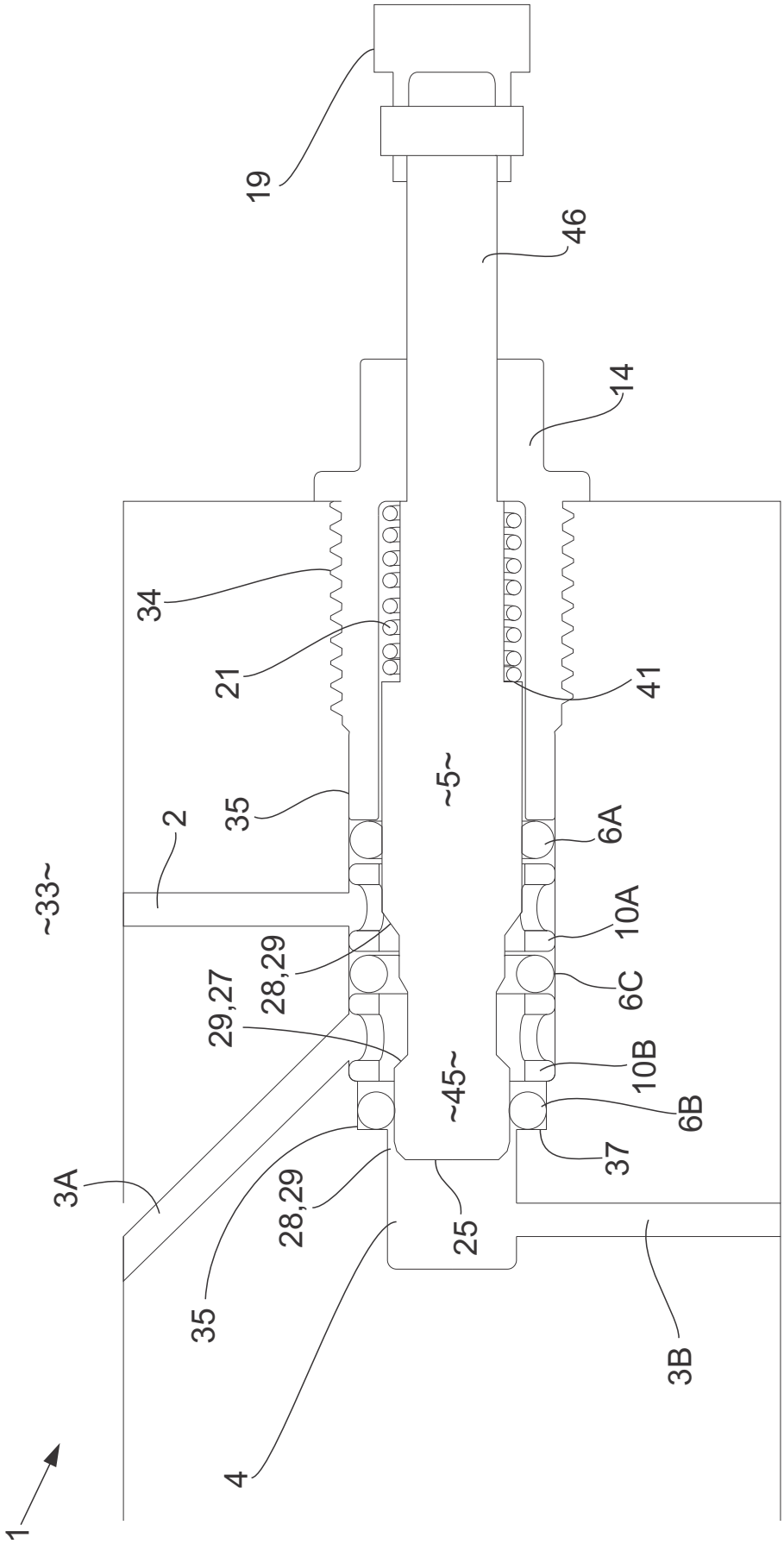
19
46
14
34
21
41
~5~
35
2
6A
~33~
10A
28,29
6C
29,27
10B
~45~
6B
37
3A
28,29
25
35
3B
4
1

Figure 2

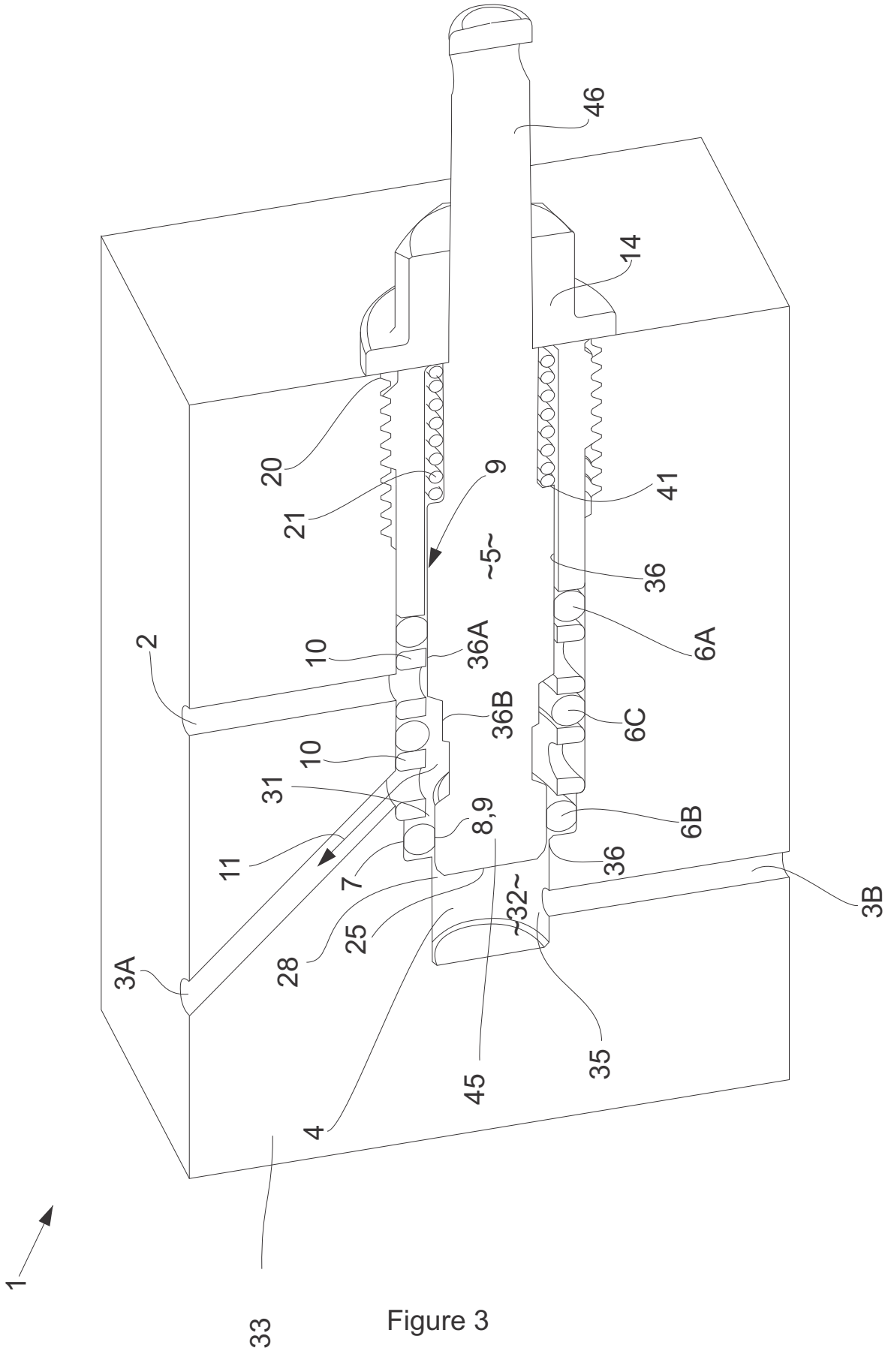
46
14
20
21
9
41
~5~
36
6A
2
10
36A
36B
6C
10
31
8,9
6B
11
7
36
3B
~32~
3A
28
25
45
35
4
1
33

Figure 3

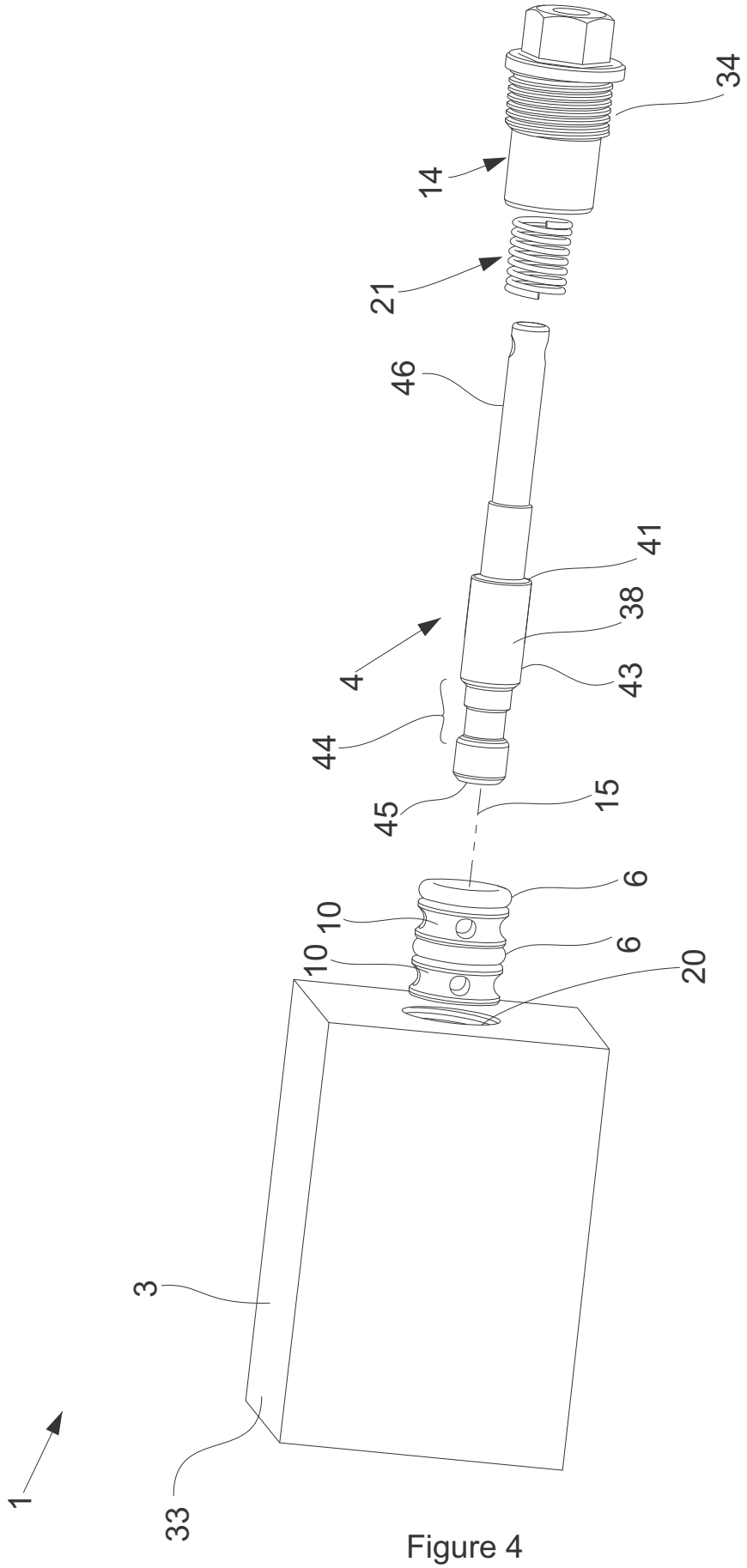

Figure 4

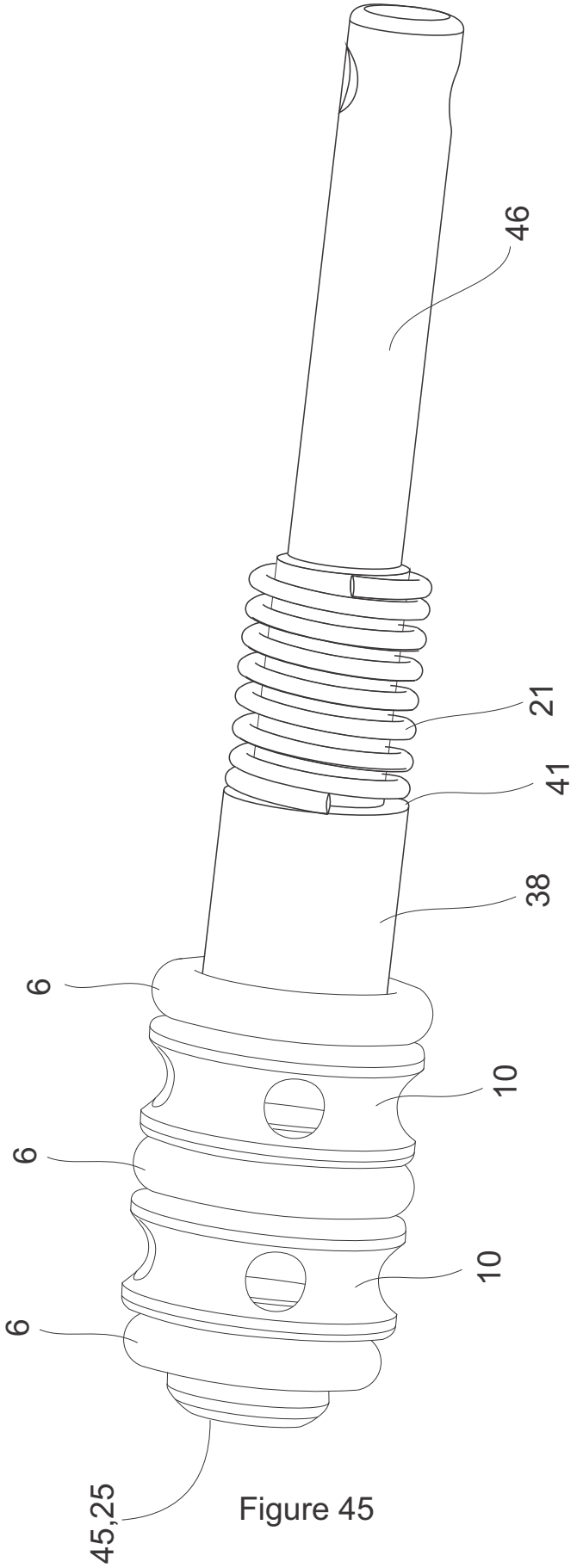

Figure 45

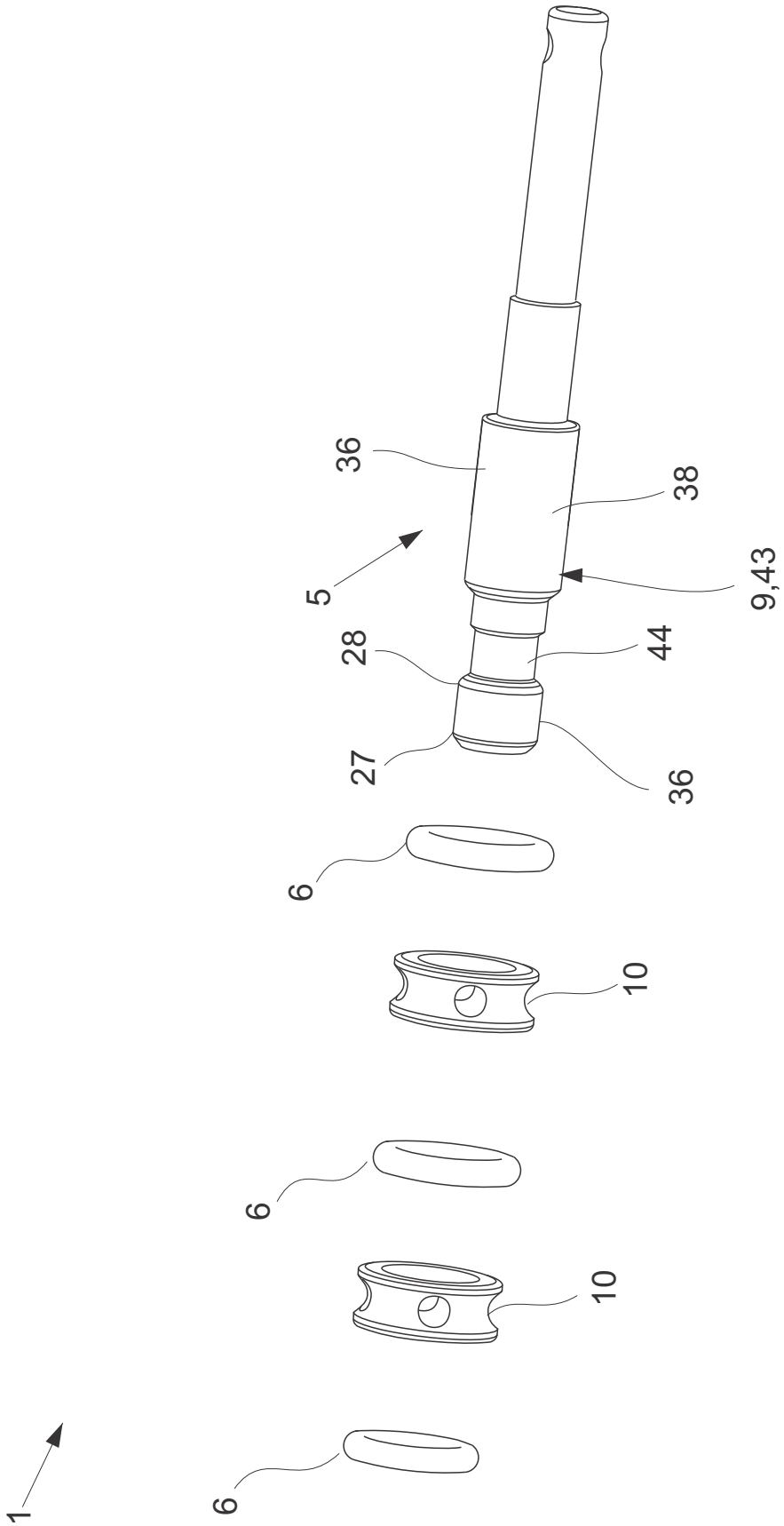

Figure 6

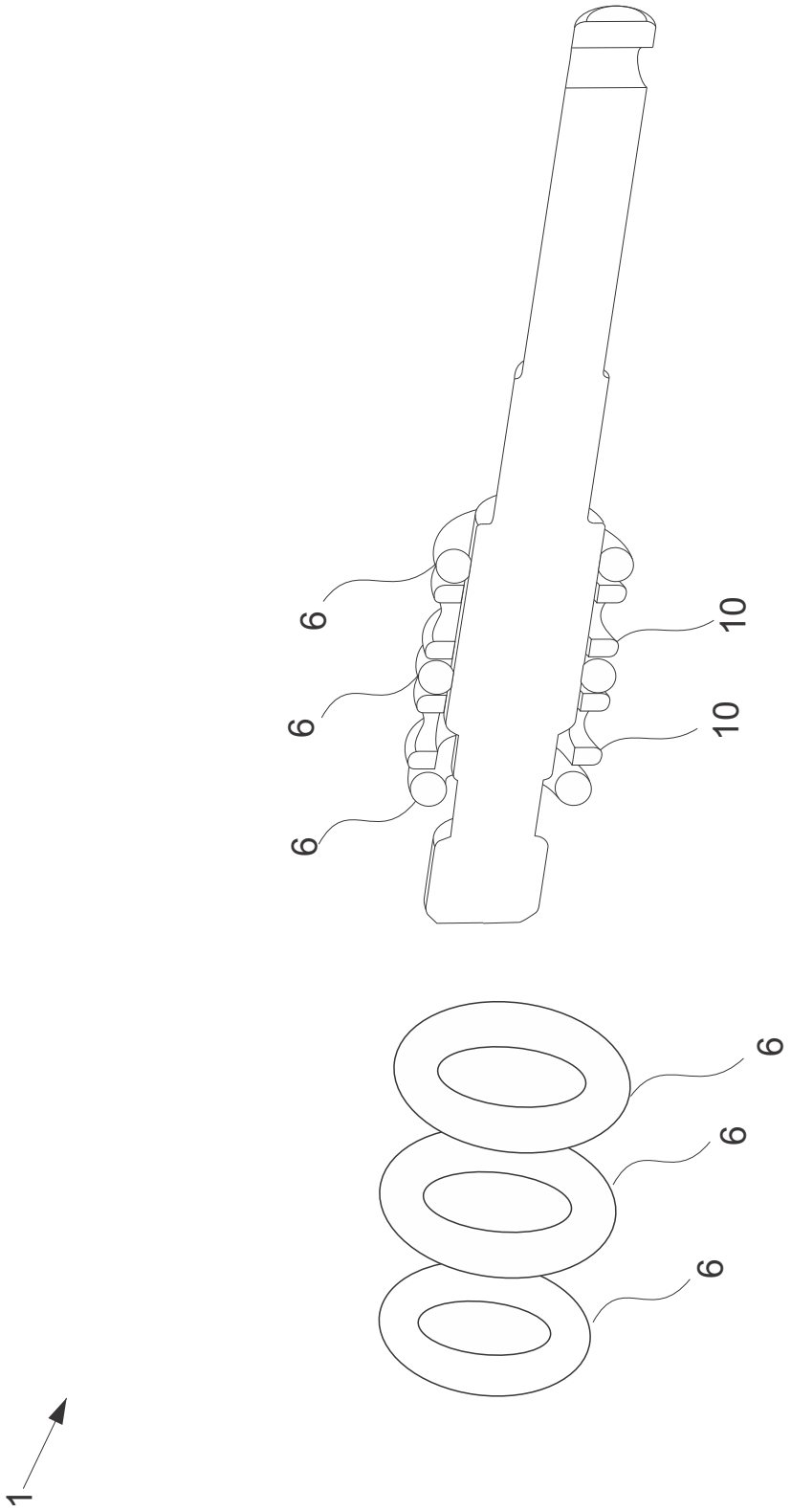

Figure 7

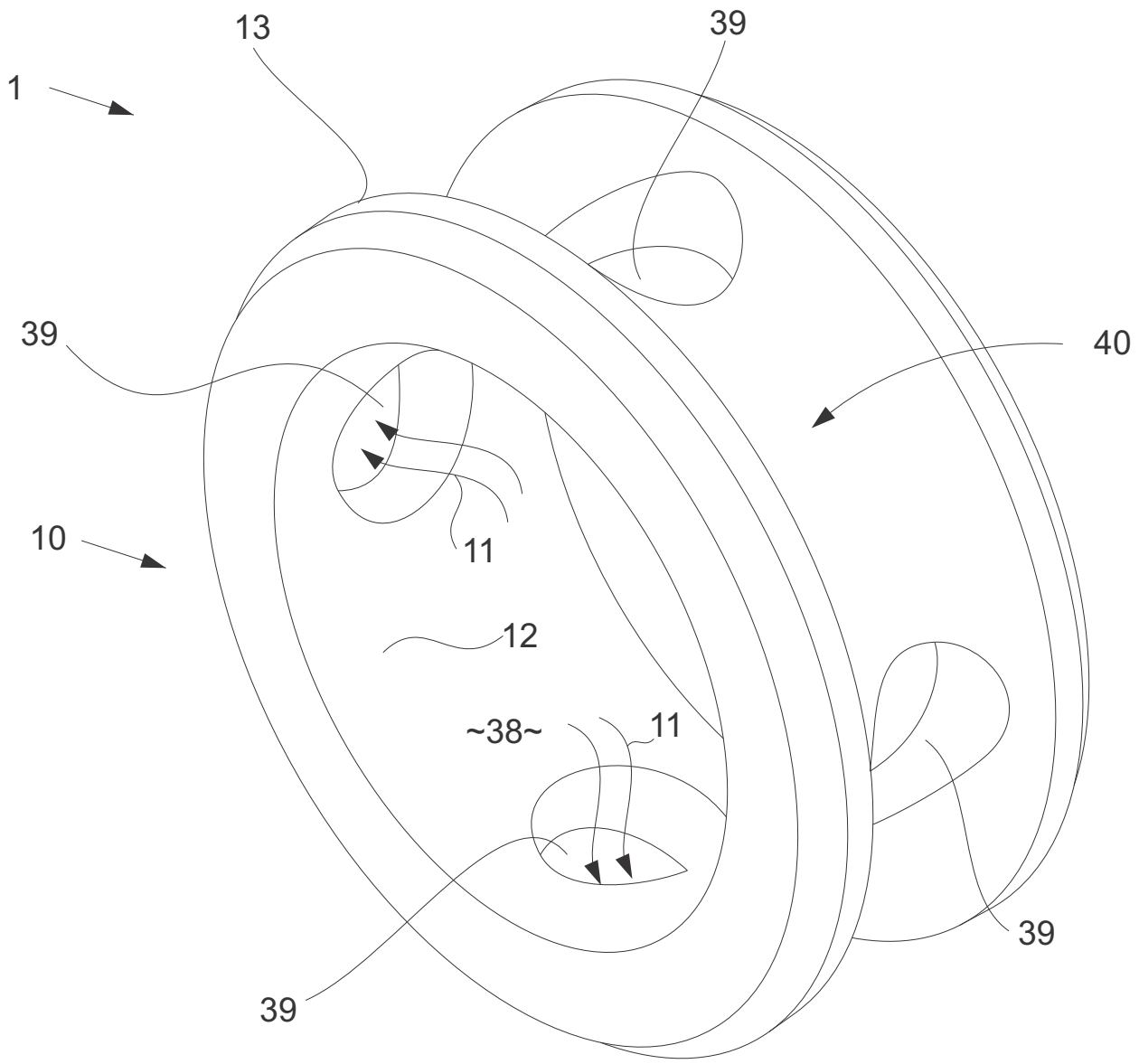

Figure 8

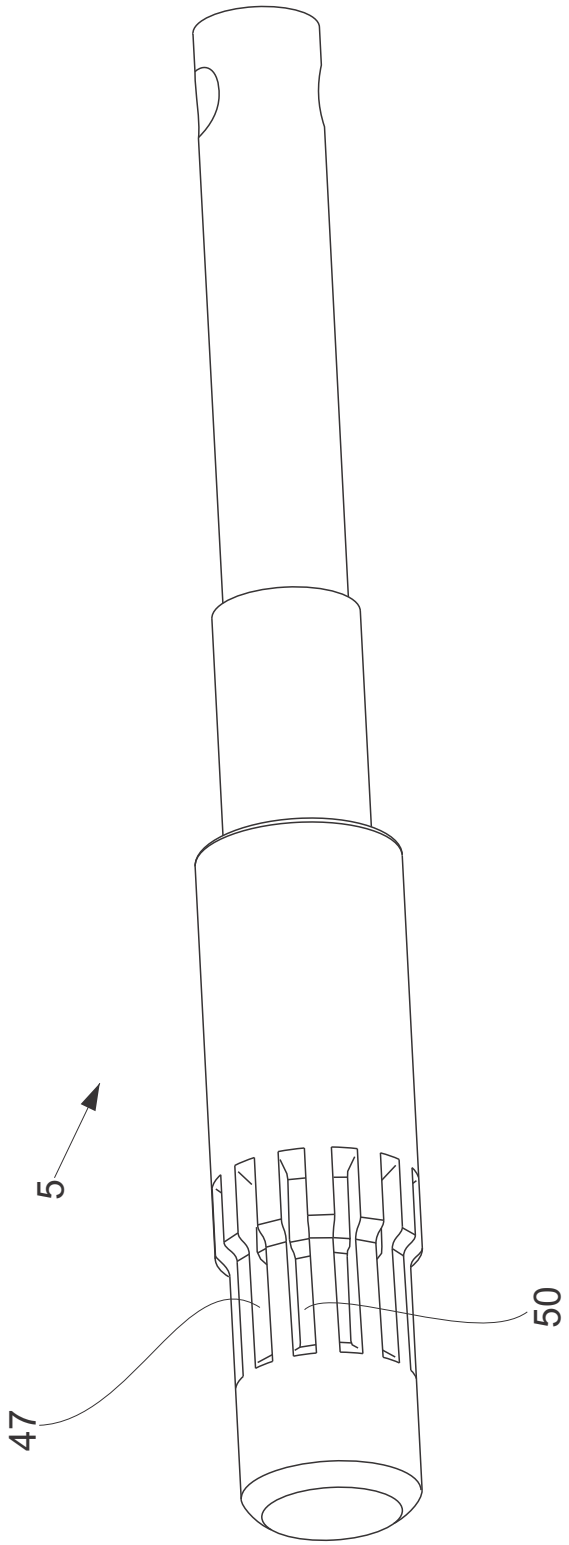

Figure 9

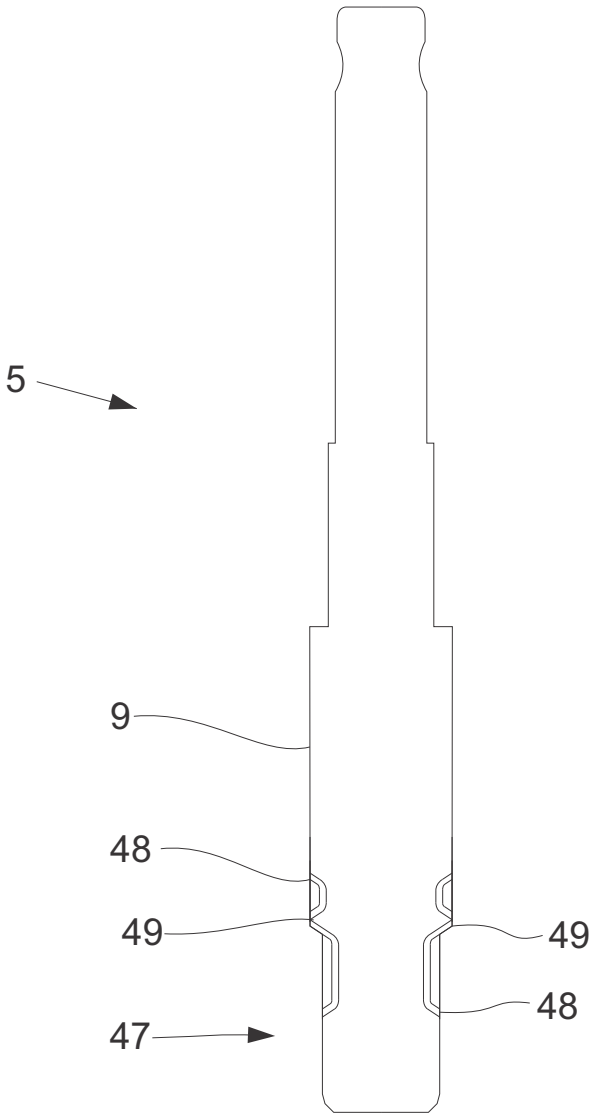

Figure 10

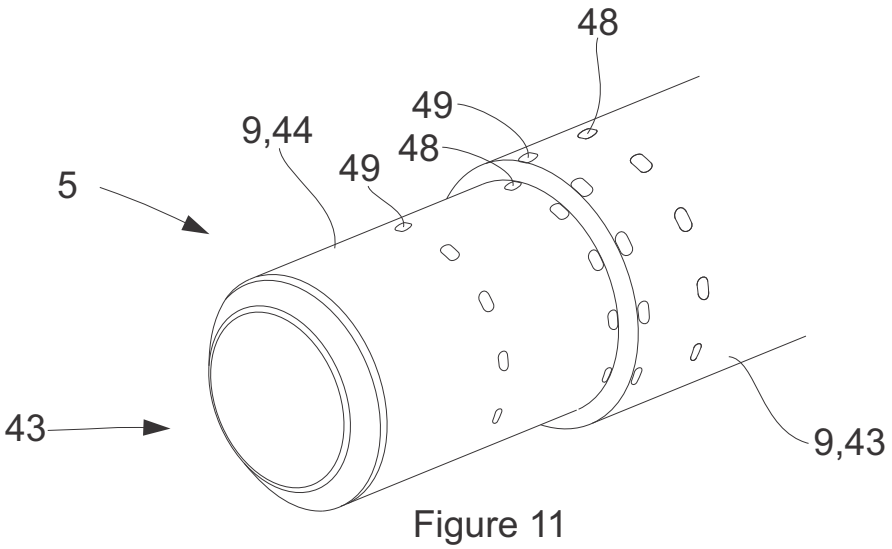

Figure 11

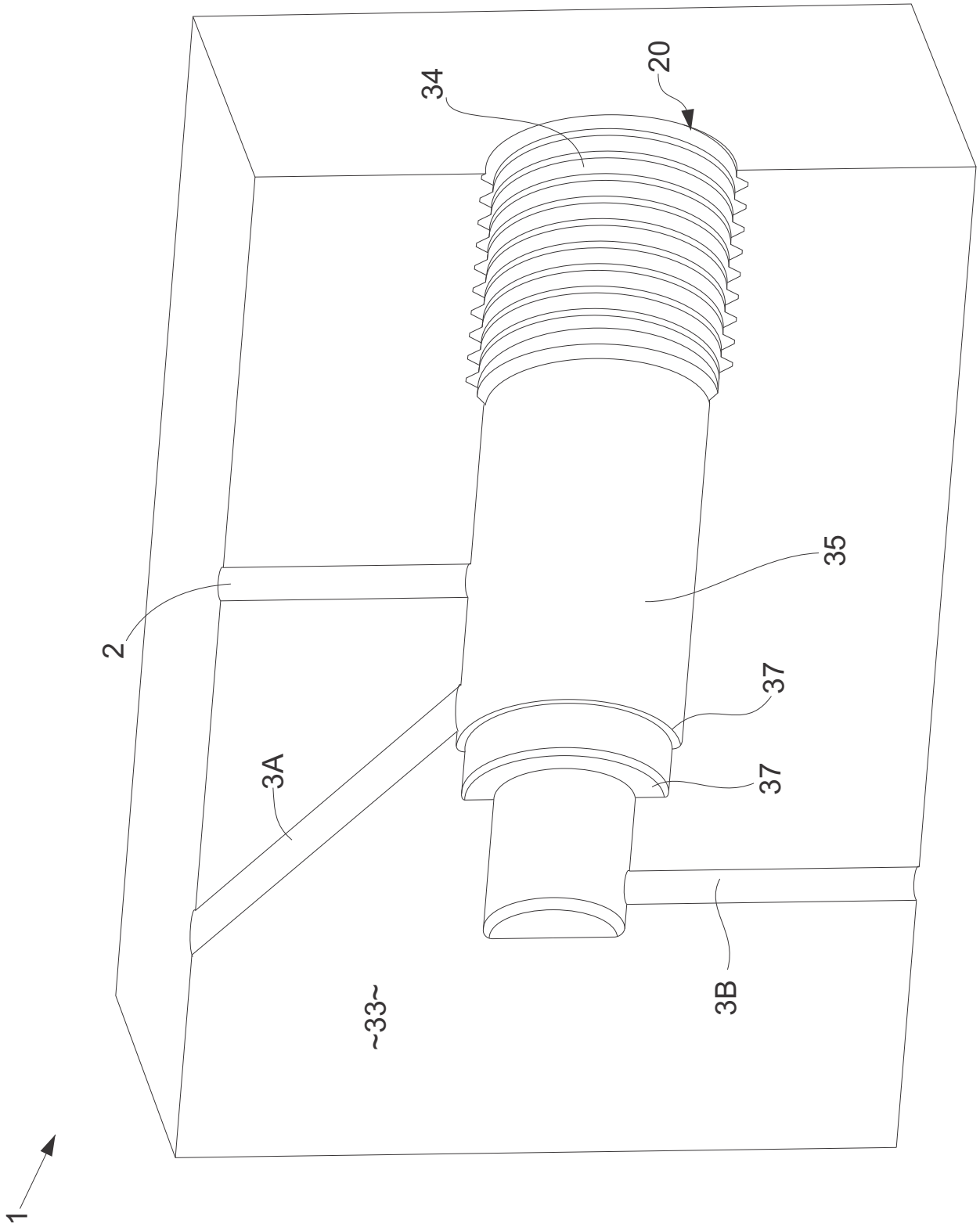

Figure 12

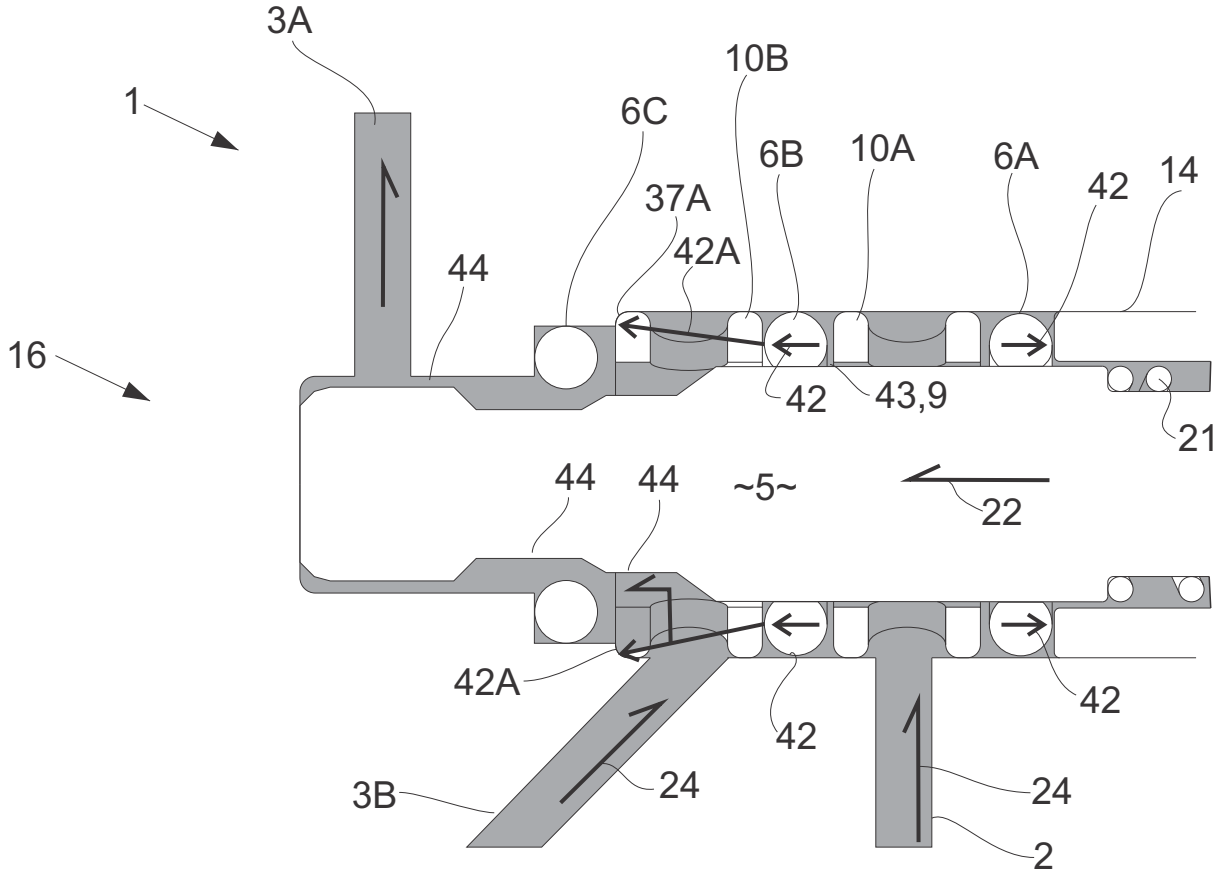
3A
1
10B
6C
6B
10A
6A
42
14
37A
42A
44
16
42
43,9
21
44
44
~5~
22
42A
42
42
3B
24
24
2

A

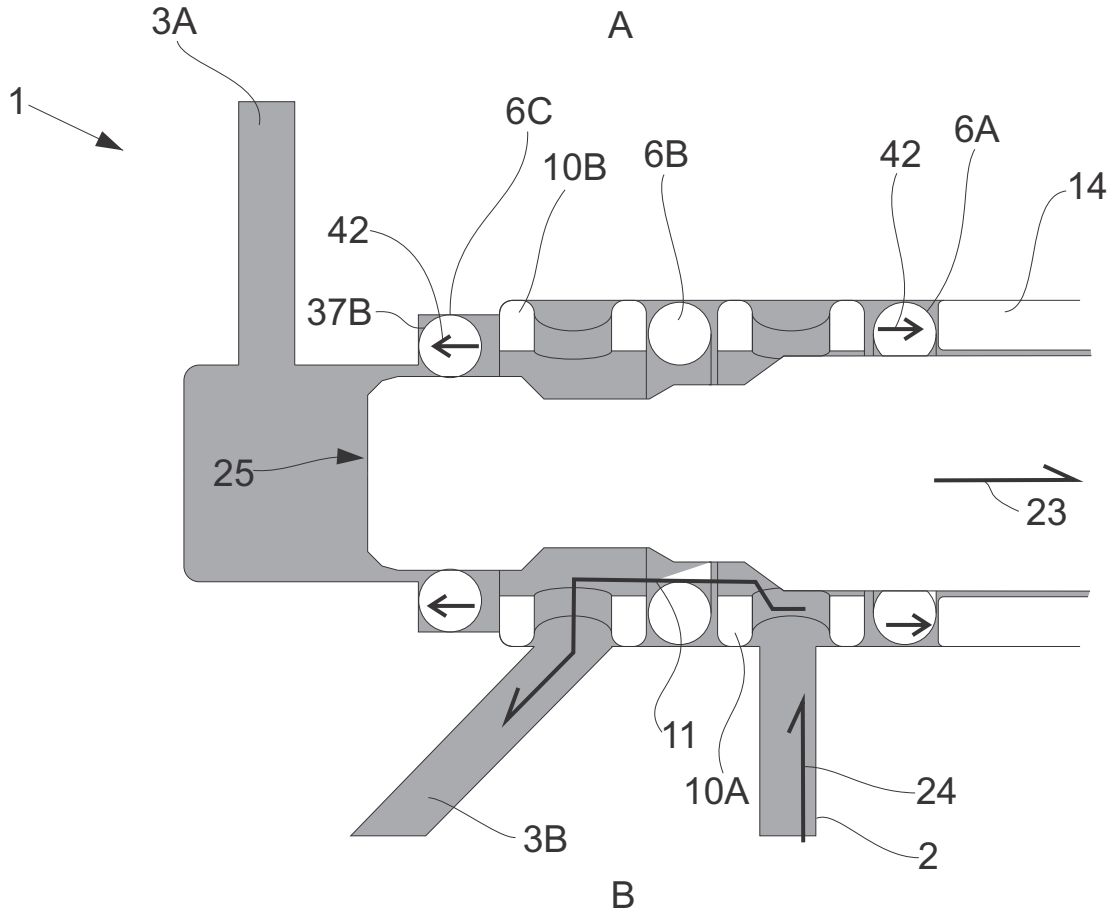
3A
1
6C
10B
6B
42
6A
14
42
37B
25
23
11
10A
24
3B
2

B

Figure 13