(12) INTERNATIONAL APPLICATION PUBLISHED UNDER THE PATENT COOPERATION TREATY (PCT)

(19) World Intellectual Property Organization
International Bureau

(43) International Publication Date
10 May 2001 (10.05.2001)

PCT

(10) International Publication Number
WO 01/33232 A2

(51) International Patent Classification[7]: G01R

(21) International Application Number: PCT/US00/41887

(22) International Filing Date:
3 November 2000 (03.11.2000)

(25) Filing Language: English

(26) Publication Language: English

(30) Priority Data:
60/163,846 5 November 1999 (05.11.1999) US
09/543,265 5 April 2000 (05.04.2000) US

(71) Applicant: **ION DIAGNOSTICS, INC.** [US/US]; 2238 Martin Avenue, Santa Clara, CA 95050 (US).

(72) Inventors: **ANDEEN, Gerry, B.**; 1135 Santa Cruz Avenue, Menlo Park, CA 94025 (US). **LEE, Martin, E.**; 24100 Big Basin Way, Saratoga, CA 95070 (US).

(74) Agents: **JAFFER, David, H.** et al.; Pillsbury Madison & Sutro LLP, 1100 New York Avenue, N.W., Washington, DC 20005 (US).

(81) Designated States *(national)*: AE, AG, AL, AM, AT, AU, AZ, BA, BB, BG, BR, BY, BZ, CA, CH, CN, CR, CU, CZ, DE, DK, DM, DZ, EE, ES, FI, GB, GD, GE, GH, GM, HR, HU, ID, IL, IN, IS, JP, KE, KG, KP, KR, KZ, LC, LK, LR, LS, LT, LU, LV, MA, MD, MG, MK, MN, MW, MX, MZ, NO, NZ, PL, PT, RO, RU, SD, SE, SG, SI, SK, SL, TJ, TM, TR, TT, UA, UG, UZ, VN, YU, ZA, ZW.

(84) Designated States *(regional)*: ARIPO patent (GH, GM, KE, LS, MW, MZ, SD, SL, SZ, TZ, UG, ZW), Eurasian patent (AM, AZ, BY, KG, KZ, MD, RU, TJ, TM), European patent (AT, BE, CH, CY, DE, DK, ES, FI, FR, GB, GR, IE, IT, LU, MC, NL, PT, SE, TR), OAPI patent (BF, BJ, CF, CG, CI, CM, GA, GN, GW, ML, MR, NE, SN, TD, TG).

[Continued on next page]

(54) Title: PRECISION STAGE

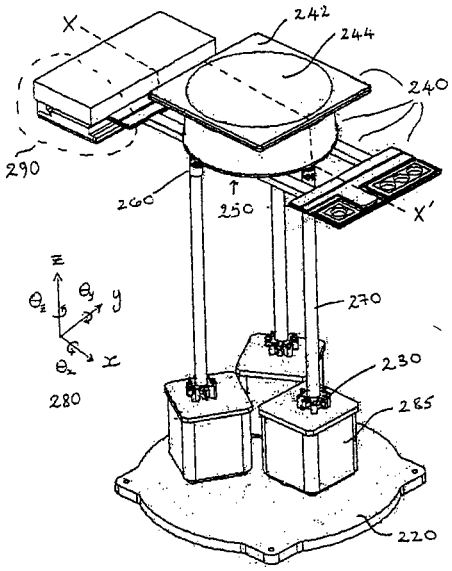

200

(57) Abstract: An ultra-high precision stage incorporating a novel, legged design suitable for applications requiring high voltage and vacuum is disclosed herein. The stage comprises; a base; a frame attached to the base; a platform with a bottom platform surface; at least three adjustable limbs coupled to the base and the bottom platform surface, each limb comprising a raising member attached to the base, a first attachment member attached to the raising member, a leg, a bottom end of the leg attached to the raising member, a second attachment member attached to a top end of the leg and the second attachment member attached to the bottom platform surface; and platform movement members coupled to the platform and the frame, providing precise positioning and movement of the platform. The attachment members can be flexure joints; further, they can be flexural thrust joints. The platform can have six degrees of freedom of movement and accommodate wafers with diameters of 300 mm. The stage can weigh less than 100 lbs.

WO 01/33232 A2

Published:

— *Without international search report and to be republished upon receipt of that report.*

For two-letter codes and other abbreviations, refer to the "Guidance Notes on Codes and Abbreviations" appearing at the beginning of each regular issue of the PCT Gazette.