FIG. 1

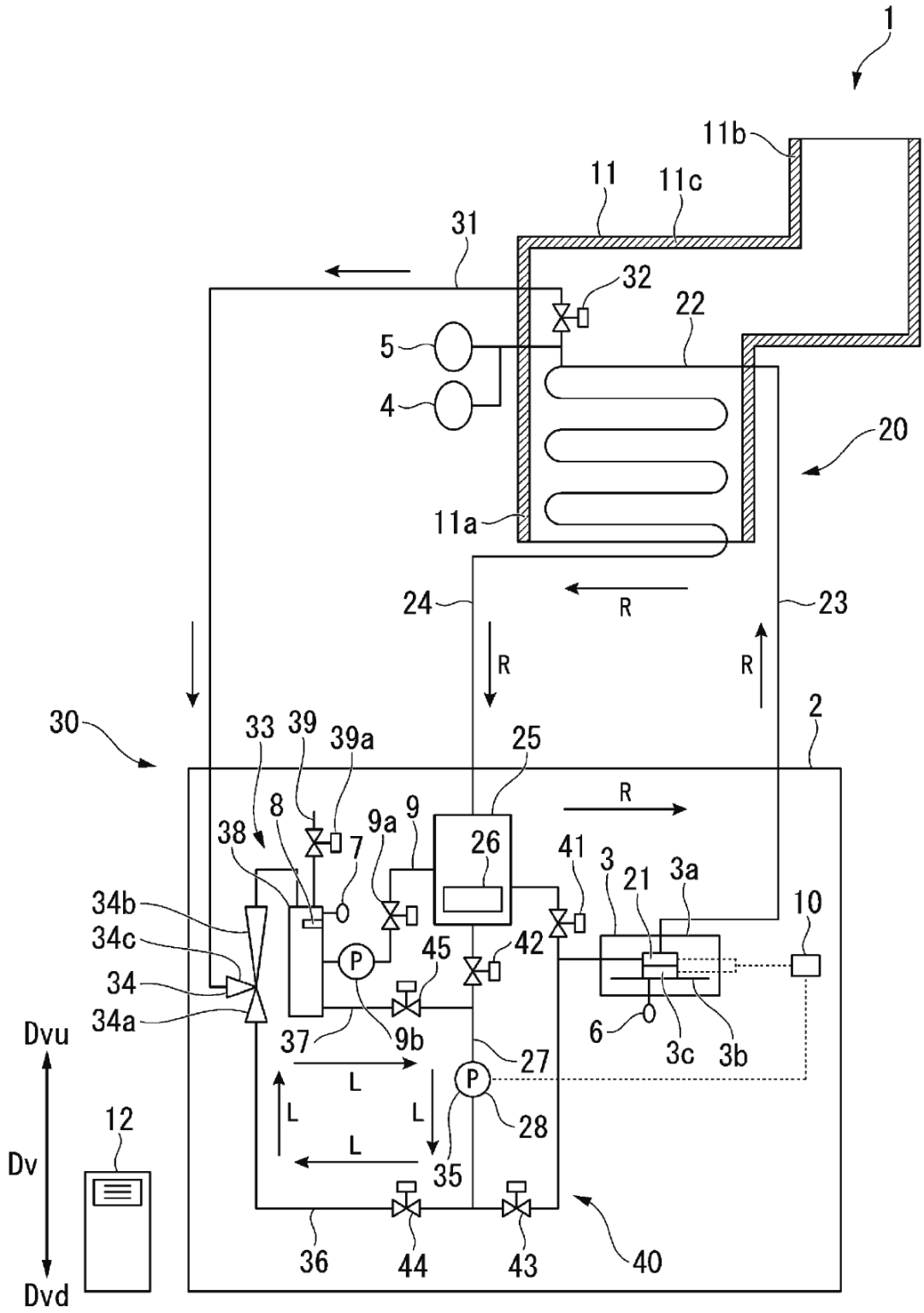
1
11b
11
11c
31
32
22
5
4
20
11a
24
R
23
R
R
30
33
39
39a
25
2
R
8
9a
9
38
7
26
41
3
21
3a
34b
34c
10
P
45
42
34
34a
37
9b
6
3c
3b
Dvu
27
L
P
L
L
28
12
L
Dv
35
36
44
43
40
Dvd

FIG. 2

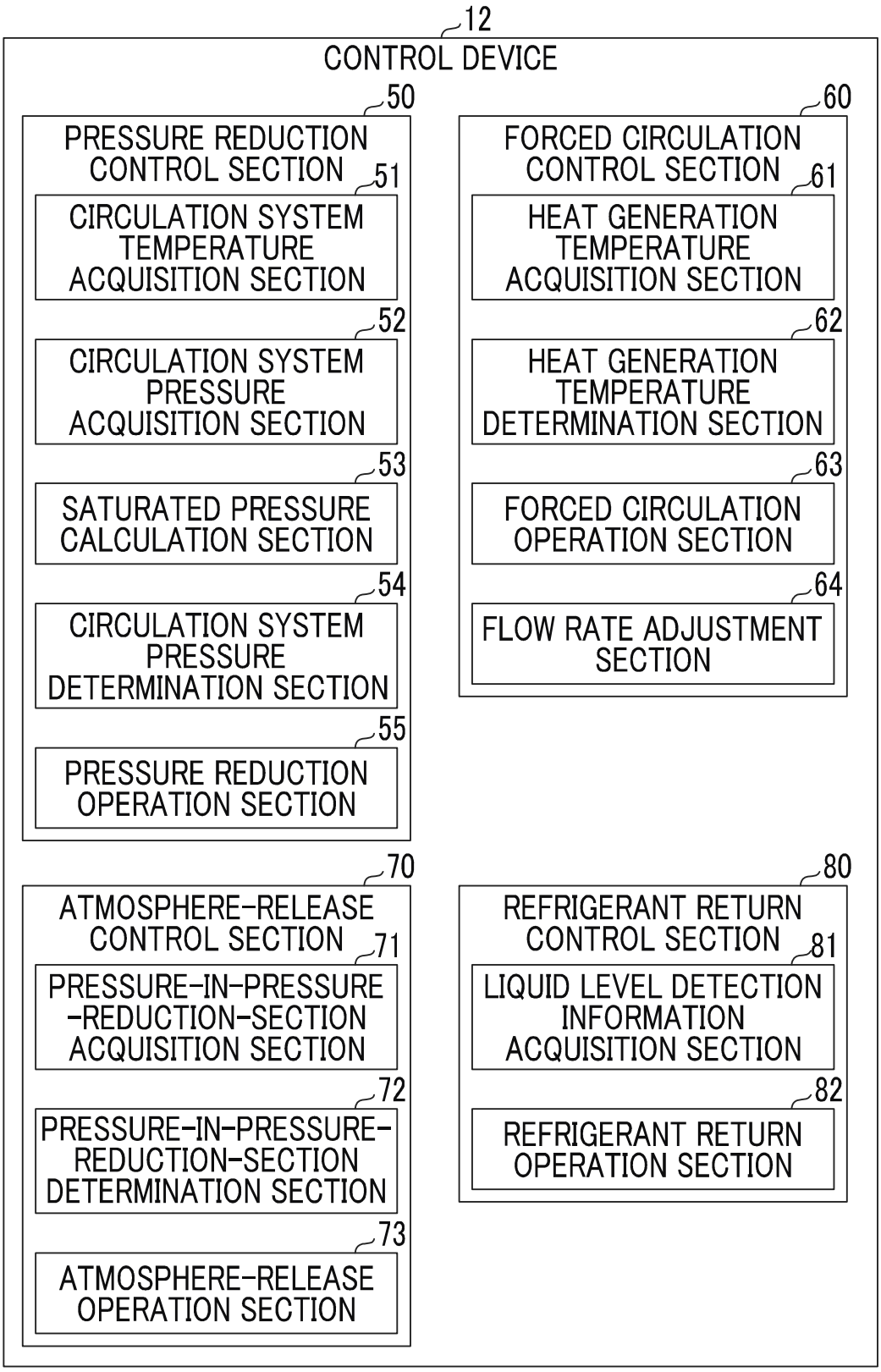
12
CONTROL DEVICE
50
PRESSURE REDUCTION CONTROL SECTION
51
CIRCULATION SYSTEM TEMPERATURE ACQUISITION SECTION
52
CIRCULATION SYSTEM PRESSURE ACQUISITION SECTION
53
SATURATED PRESSURE CALCULATION SECTION
54
CIRCULATION SYSTEM PRESSURE DETERMINATION SECTION
55
PRESSURE REDUCTION OPERATION SECTION
60
FORCED CIRCULATION CONTROL SECTION
61
HEAT GENERATION TEMPERATURE ACQUISITION SECTION
62
HEAT GENERATION TEMPERATURE DETERMINATION SECTION
63
FORCED CIRCULATION OPERATION SECTION
64
FLOW RATE ADJUSTMENT SECTION
70
ATMOSPHERE-RELEASE CONTROL SECTION
71
PRESSURE-IN-PRESSURE-REDUCTION-SECTION ACQUISITION SECTION
72
PRESSURE-IN-PRESSURE-REDUCTION-SECTION DETERMINATION SECTION
73
ATMOSPHERE-RELEASE OPERATION SECTION
80
REFRIGERANT RETURN CONTROL SECTION
81
LIQUID LEVEL DETECTION INFORMATION ACQUISITION SECTION
82
REFRIGERANT RETURN OPERATION SECTION

FIG. 3

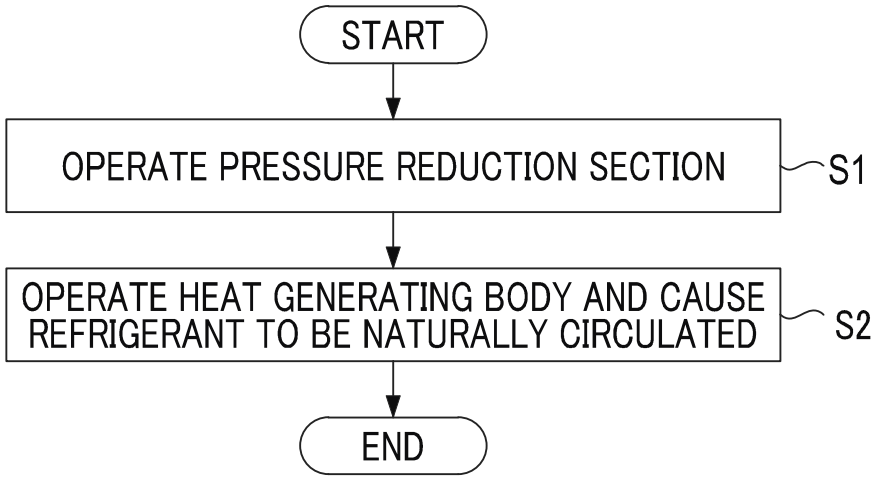
START
OPERATE PRESSURE REDUCTION SECTION
S1
OPERATE HEAT GENERATING BODY AND CAUSE REFRIGERANT TO BE NATURALLY CIRCULATED
S2
END

FIG. 4

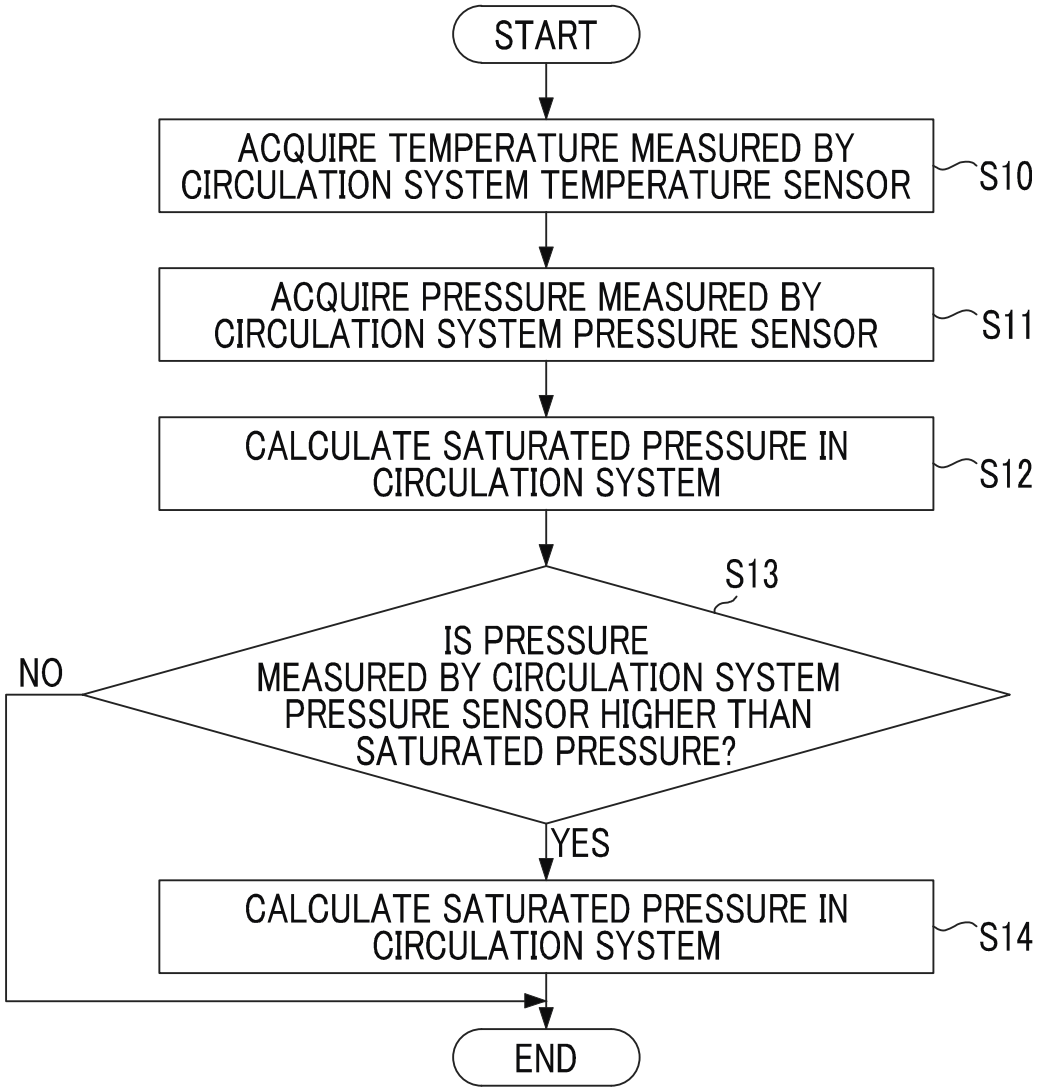
START
ACQUIRE TEMPERATURE MEASURED BY CIRCULATION SYSTEM TEMPERATURE SENSOR
S10
ACQUIRE PRESSURE MEASURED BY CIRCULATION SYSTEM PRESSURE SENSOR
S11
CALCULATE SATURATED PRESSURE IN CIRCULATION SYSTEM
S12
S13
IS PRESSURE MEASURED BY CIRCULATION SYSTEM PRESSURE SENSOR HIGHER THAN SATURATED PRESSURE?
NO
YES
CALCULATE SATURATED PRESSURE IN CIRCULATION SYSTEM
S14
END

FIG. 5

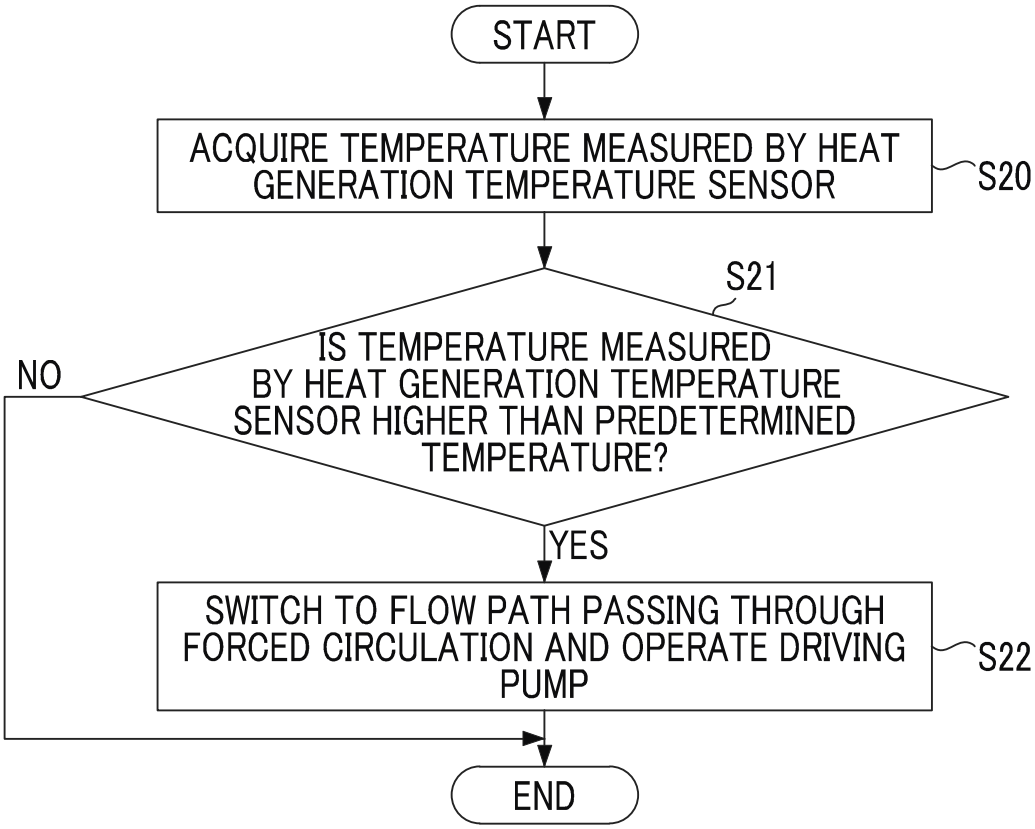
START
ACQUIRE TEMPERATURE MEASURED BY HEAT GENERATION TEMPERATURE SENSOR
S20
S21
IS TEMPERATURE MEASURED BY HEAT GENERATION TEMPERATURE SENSOR HIGHER THAN PREDETERMINED TEMPERATURE?
NO
YES
SWITCH TO FLOW PATH PASSING THROUGH FORCED CIRCULATION AND OPERATE DRIVING PUMP
S22
END

FIG. 6

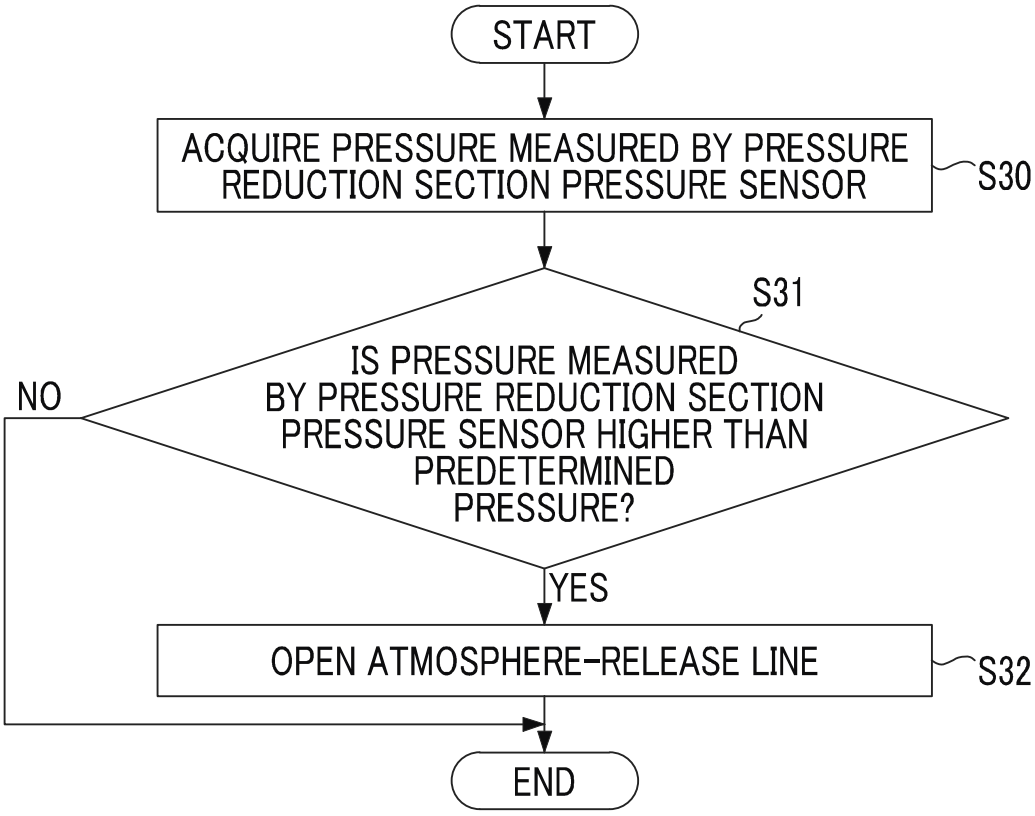
START
ACQUIRE PRESSURE MEASURED BY PRESSURE REDUCTION SECTION PRESSURE SENSOR
S30
S31
IS PRESSURE MEASURED BY PRESSURE REDUCTION SECTION PRESSURE SENSOR HIGHER THAN PREDETERMINED PRESSURE?
NO
YES
OPEN ATMOSPHERE-RELEASE LINE
S32
END

FIG. 7

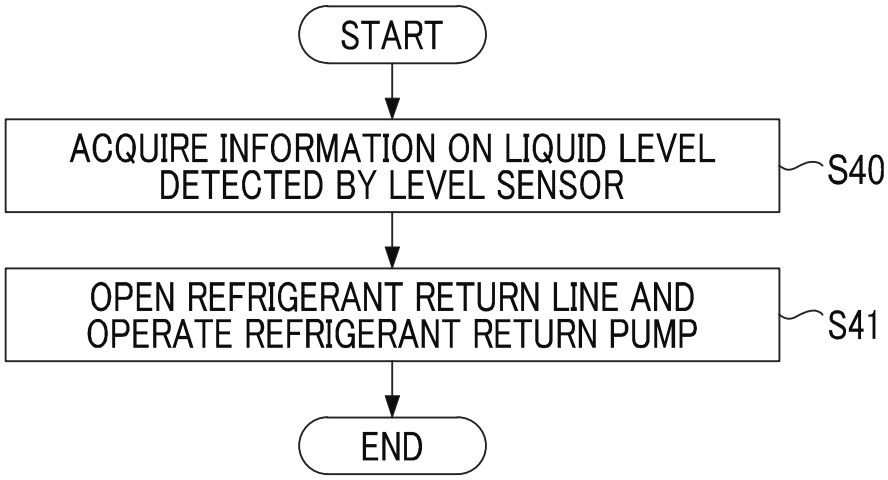
START
ACQUIRE INFORMATION ON LIQUID LEVEL DETECTED BY LEVEL SENSOR
S40
OPEN REFRIGERANT RETURN LINE AND OPERATE REFRIGERANT RETURN PUMP
S41
END

FIG. 8

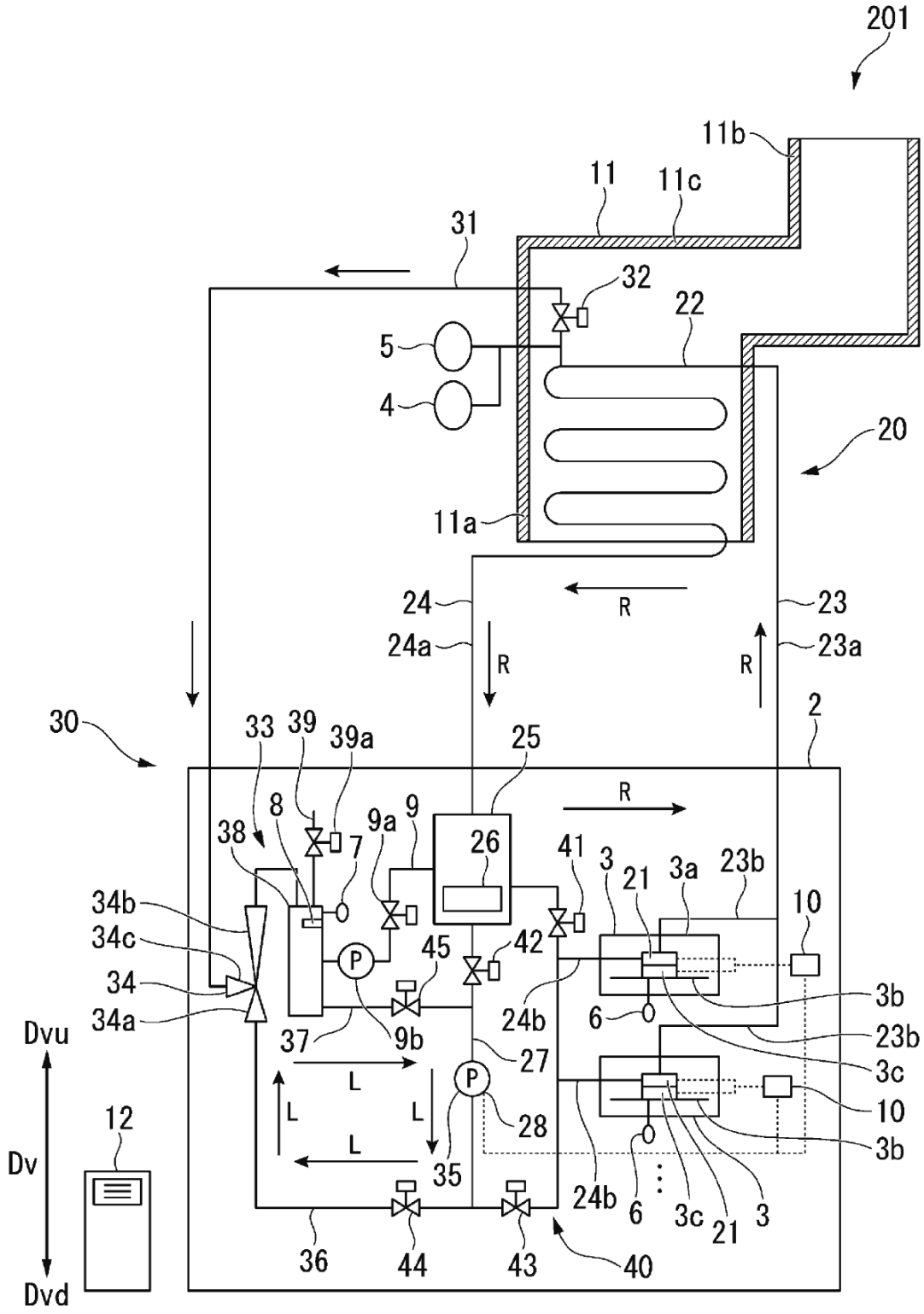
201
11b
11
11c
31
32
22
5
4
20
11a
24
R
23
24a
R
R
23a
30
33
39
39a
25
2
R
8
9a
9
38
7
26
41
3
21
3a
23b
34b
10
34c
45
42
P
34
3b
34a
24b
6
Dvu
37
9b
23b
27
3c
L
P
10
12
L
L
28
3b
L
Dv
35
24b
6
3c
21
3
36
44
43
40
Dvd

FIG. 9

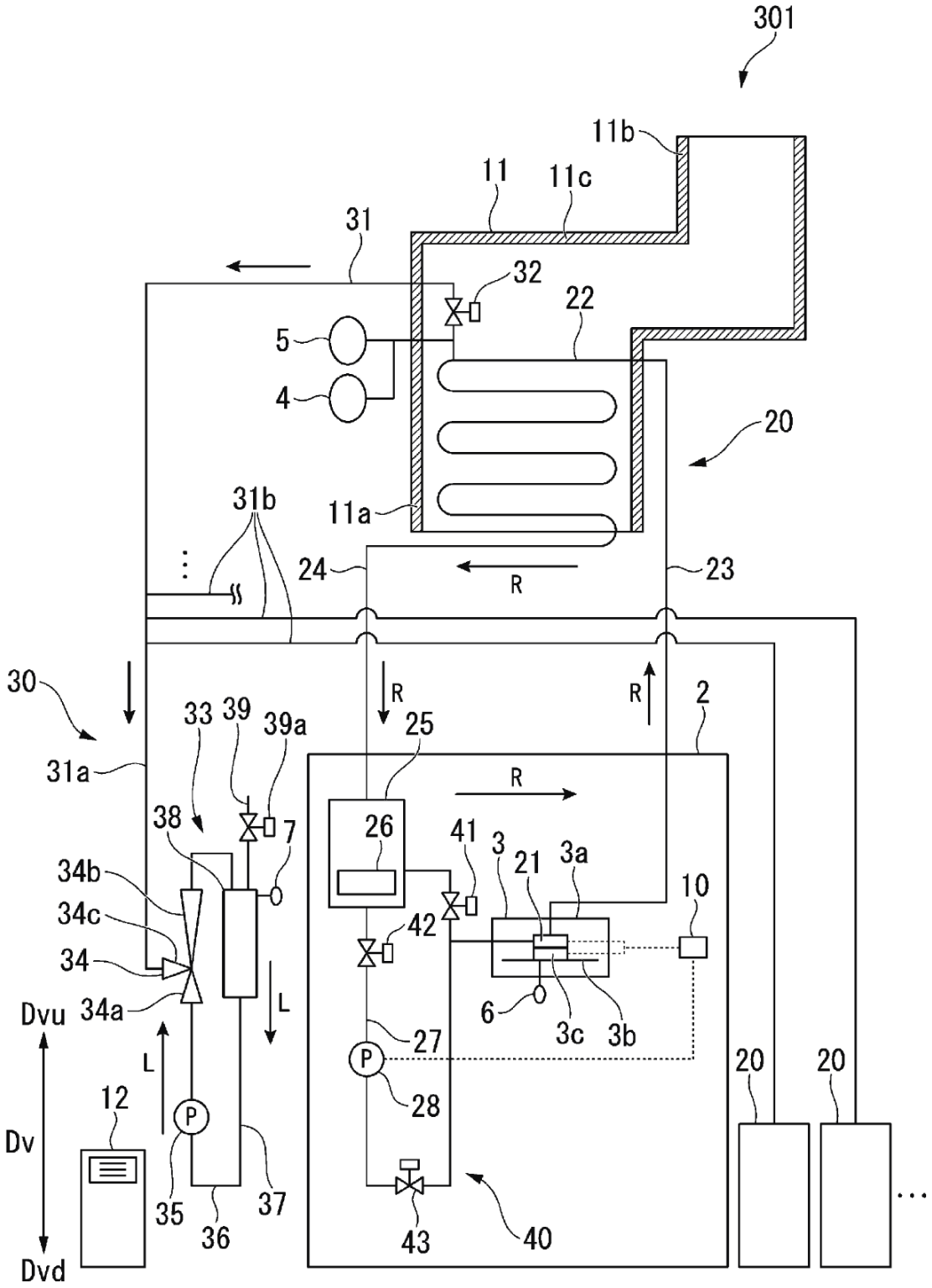
301
11b
11
11c
31
32
22
5
4
20
31b
11a
24
R
23
30
33
39
39a
25
R
R
2
31a
38
7
26
41
3
21
3a
10
34b
34c
42
34
34a
6
3c
3b
Dvu
L
27
L
20
20
12
P
28
Dv
35
36
37
43
40
Dvd

FIG. 10

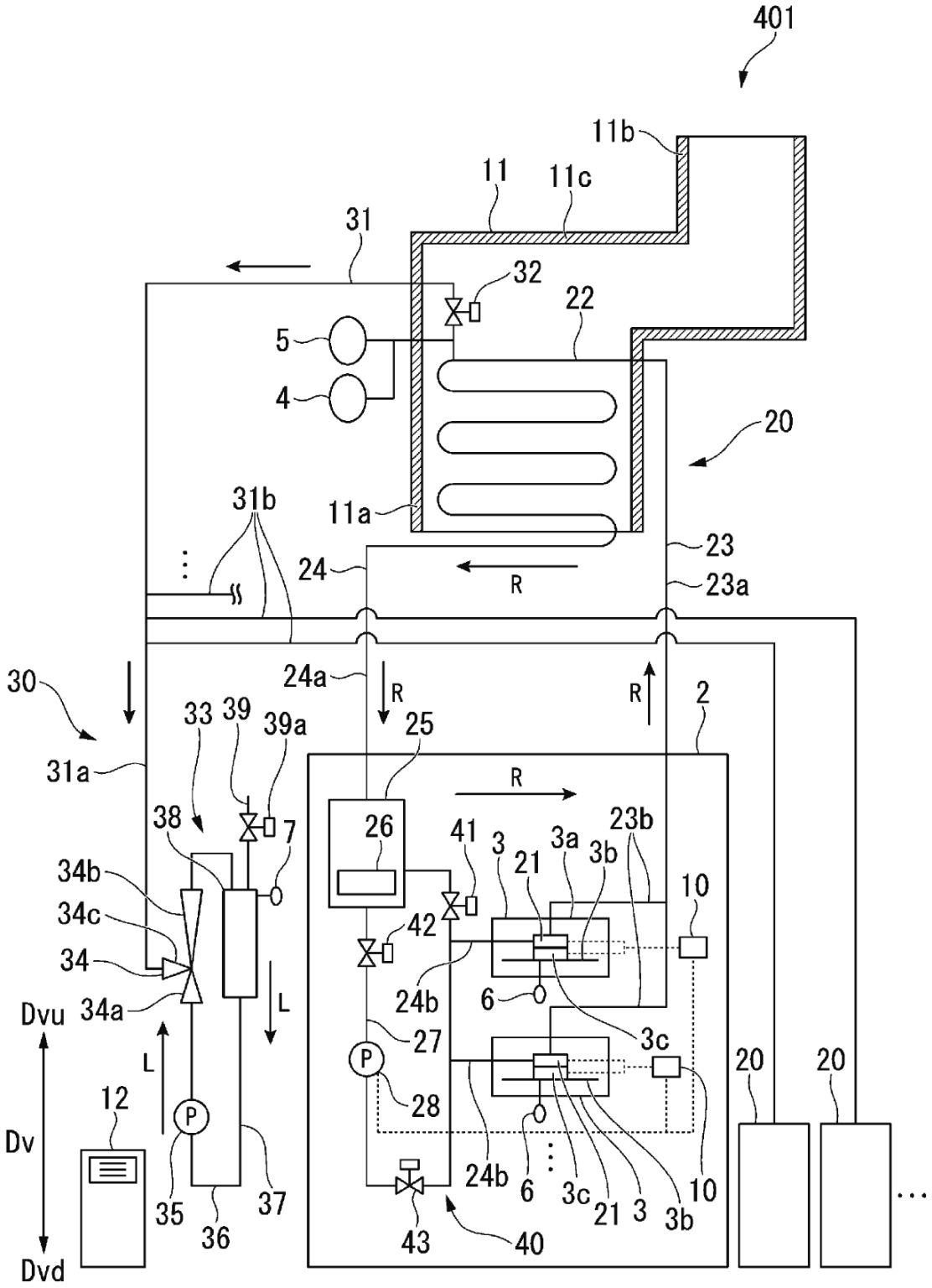
401
11b
11
11c
31
32
22
5
4
20
31b
11a
23
24
R
23a
30
24a
R
R
2
33
39
39a
25
31a
R
38
7
26
41
3
21
3a
3b
23b
10
34b
34c
42
34
24b
6
3c
Dvu
34a
L
27
L
P
20
20
12
28
P
Dv
24b
6
3c
21
3
3b
10
35
36
37
43
40
Dvd

FIG. 11

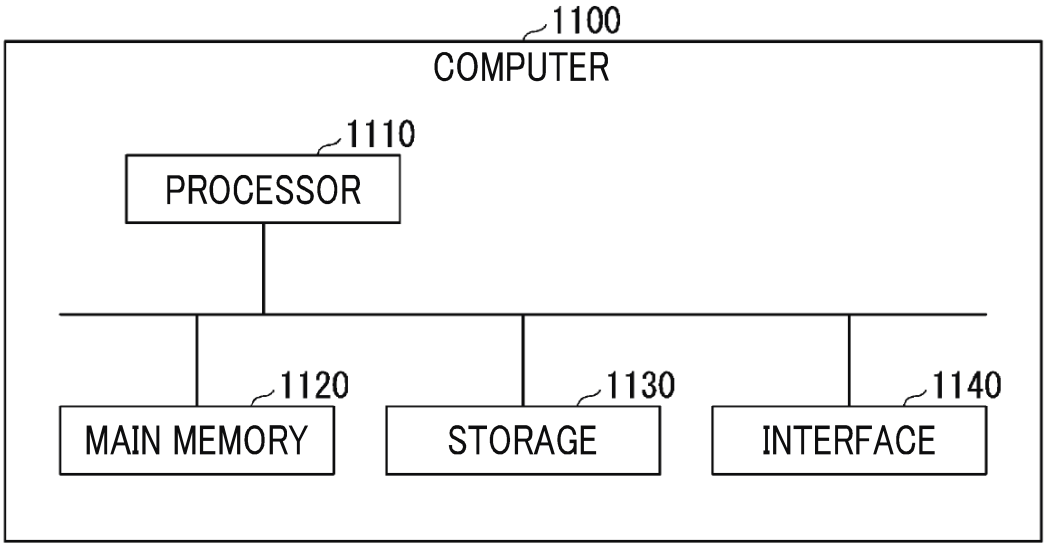
1100
COMPUTER
1110
PROCESSOR
1120
MAIN MEMORY
1130
STORAGE
1140
INTERFACE