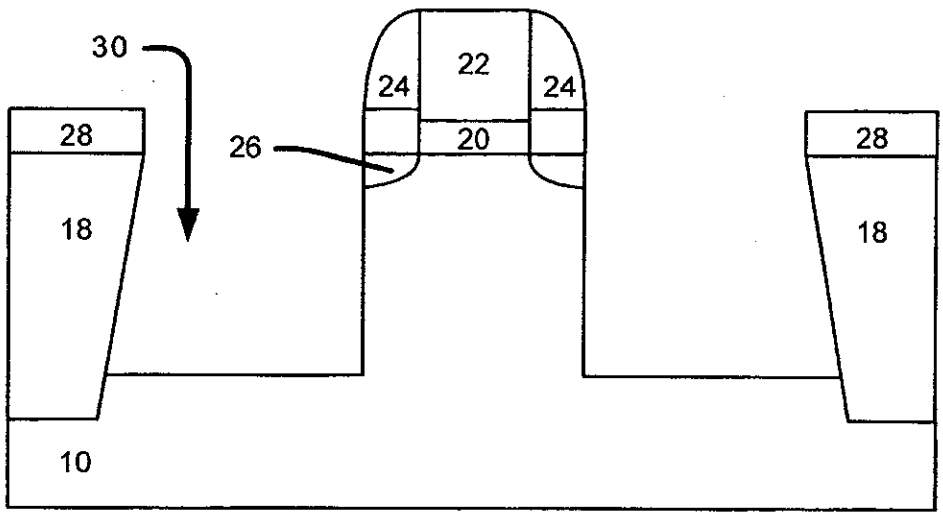

FIGURE 1A

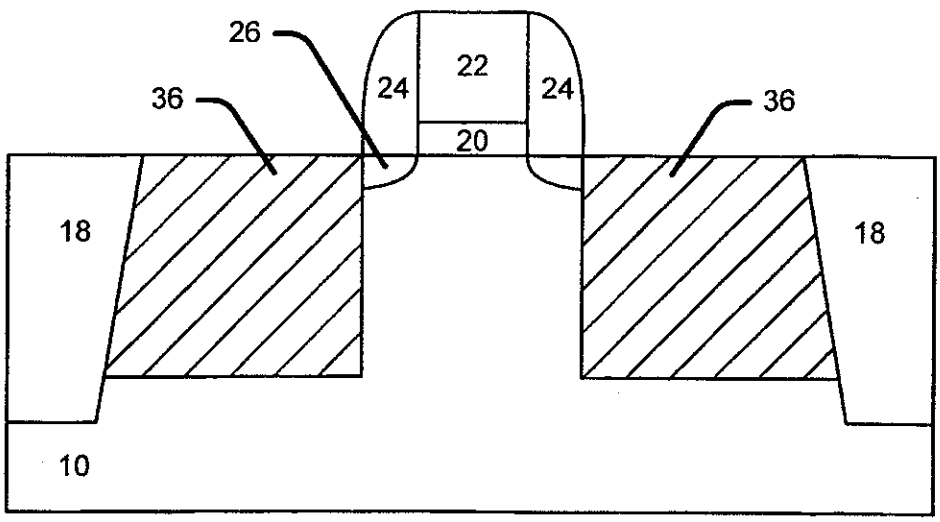

FIGURE 1B

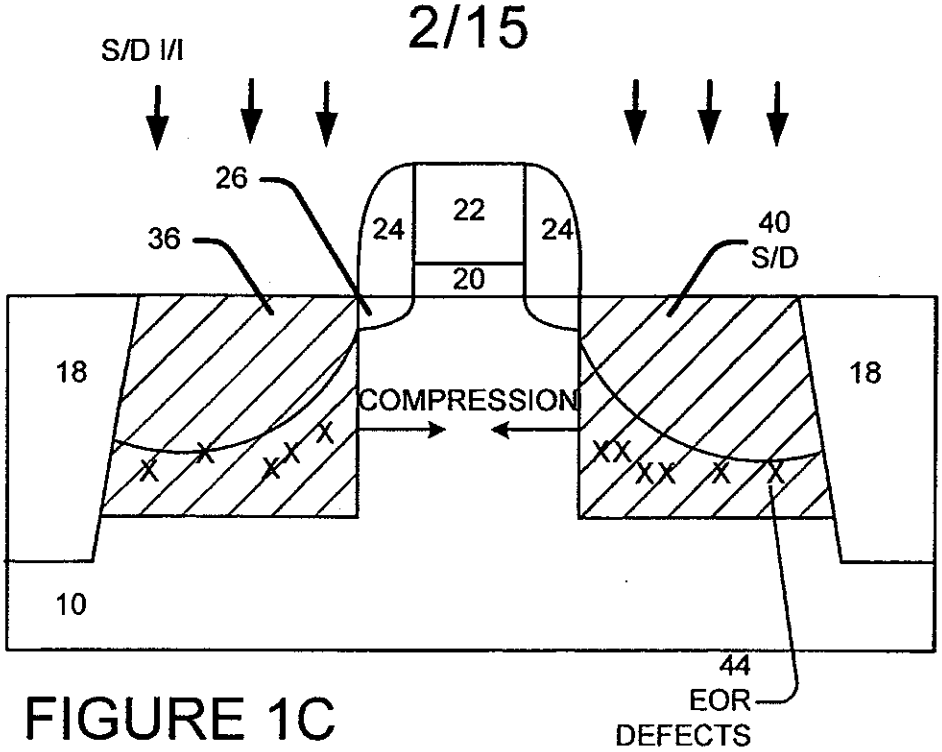

FIGURE 1C

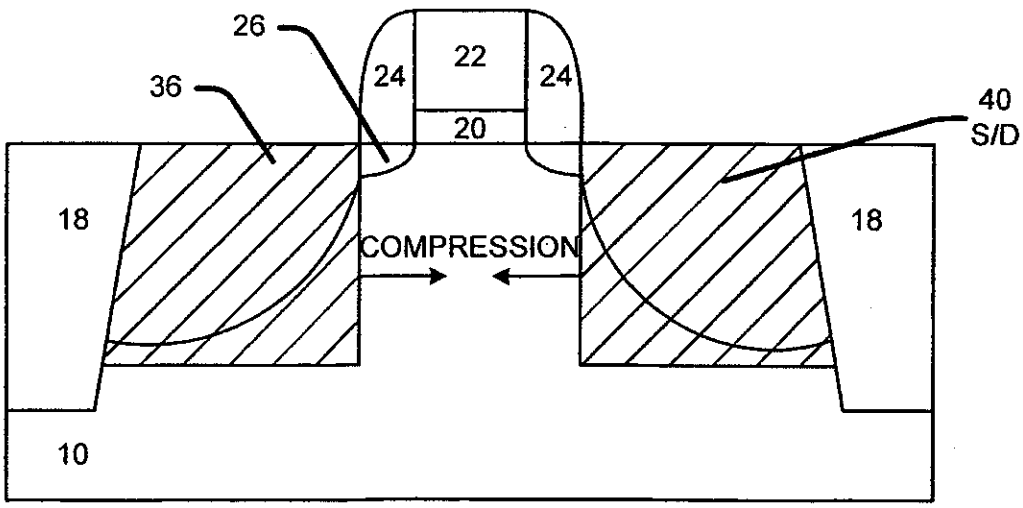

FIGURE 1D

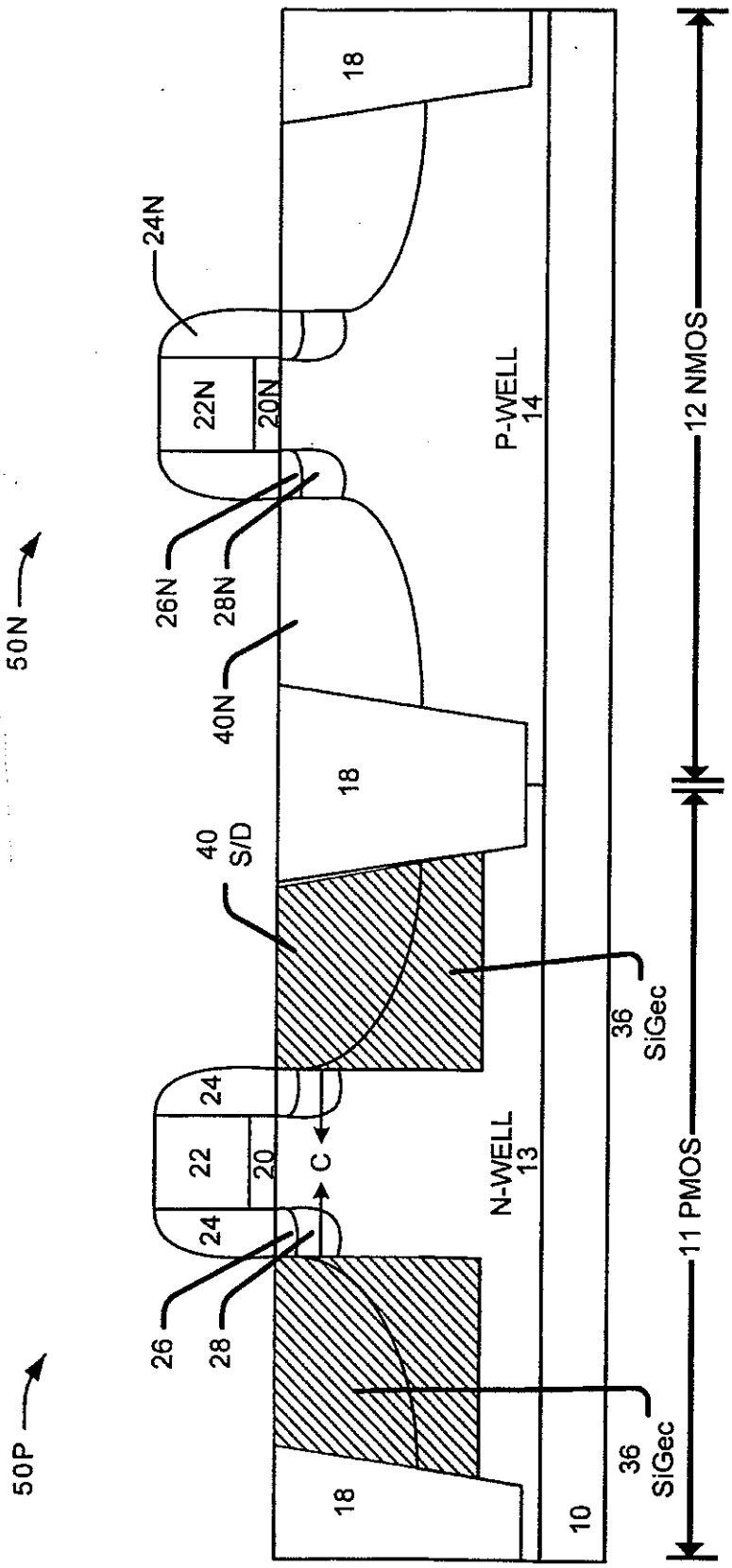
50N
50P
18
24N
22N
20N
P-WELL
14
26N
28N
40N
18
40
S/D
36
SiGec
24
22
20
C
N-WELL
13
24
26
28
18
10
36
SiGec
12 NMOS
11 PMOS

FIGURE 1E

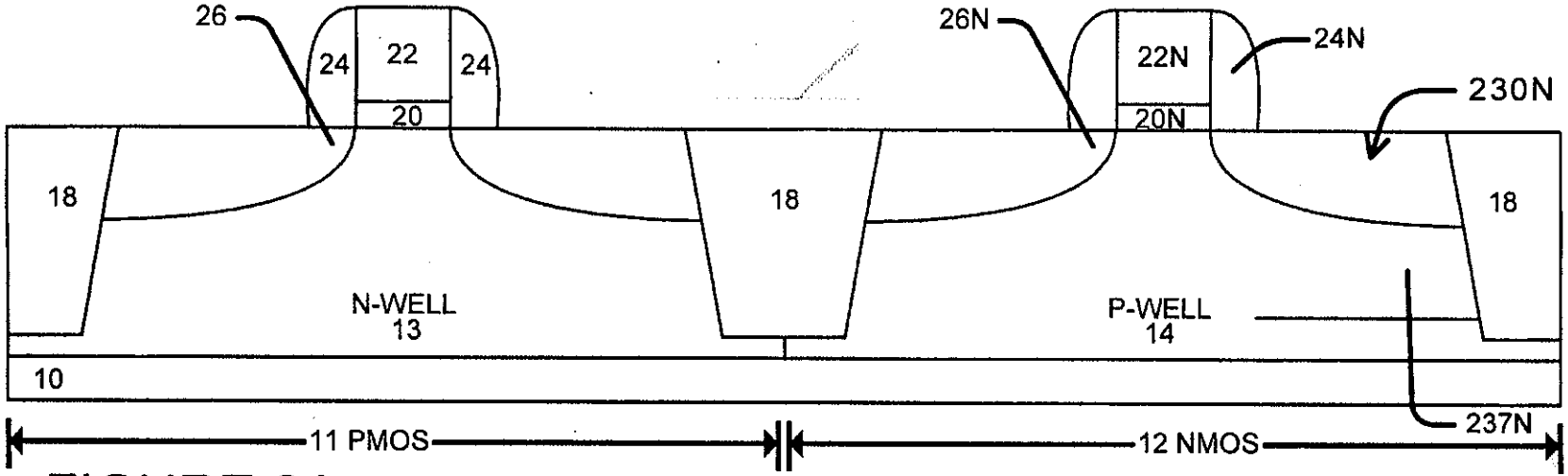

FIGURE 2A

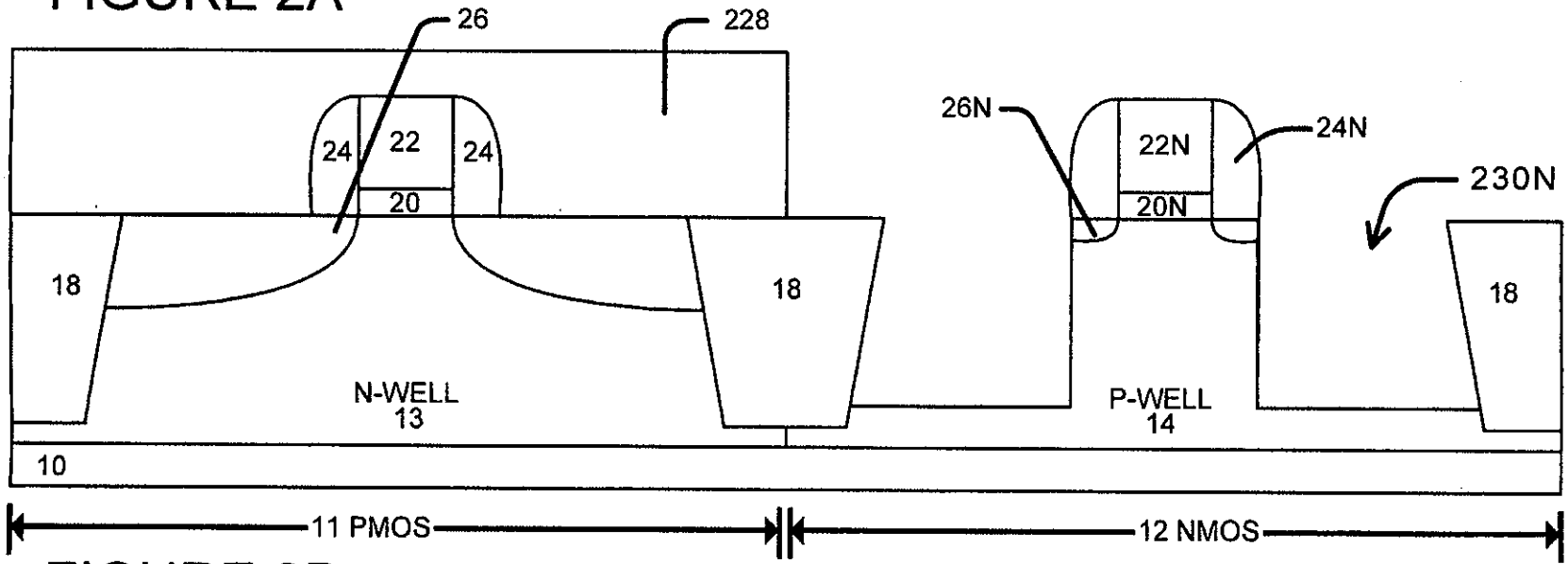

FIGURE 2B

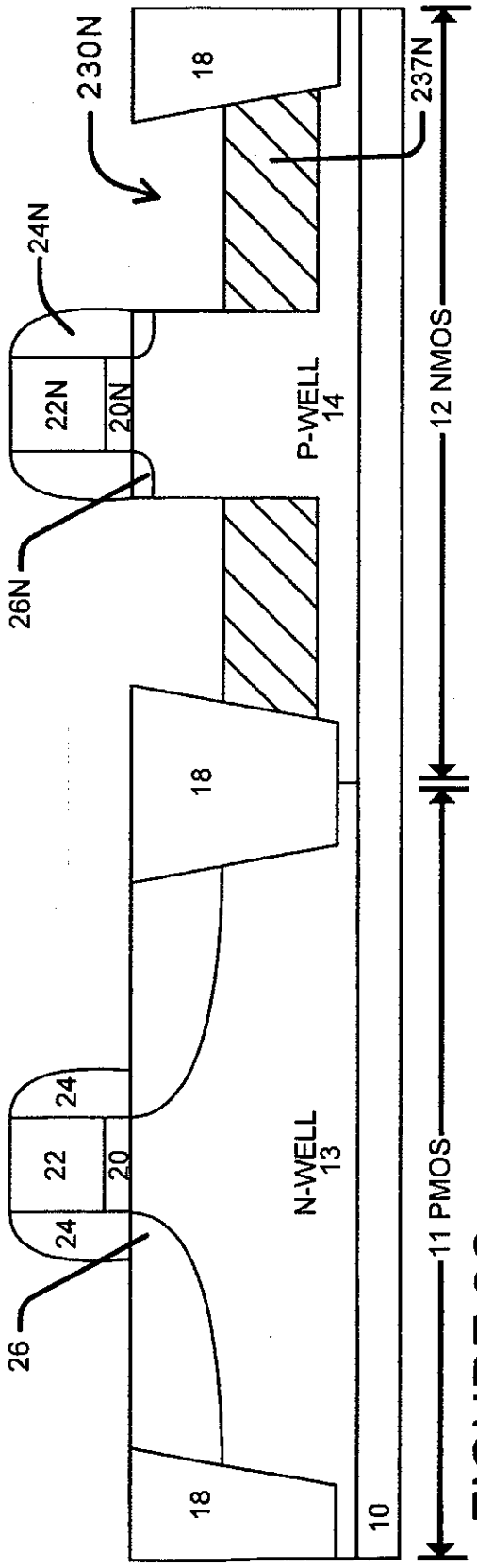

FIGURE 2C

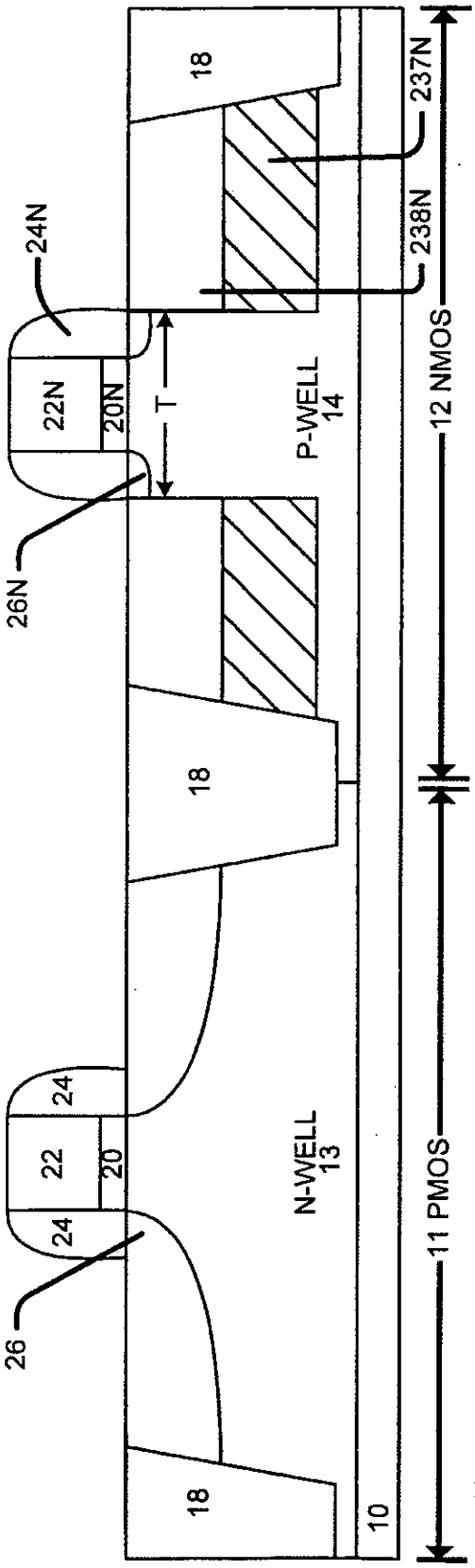

FIGURE 2D

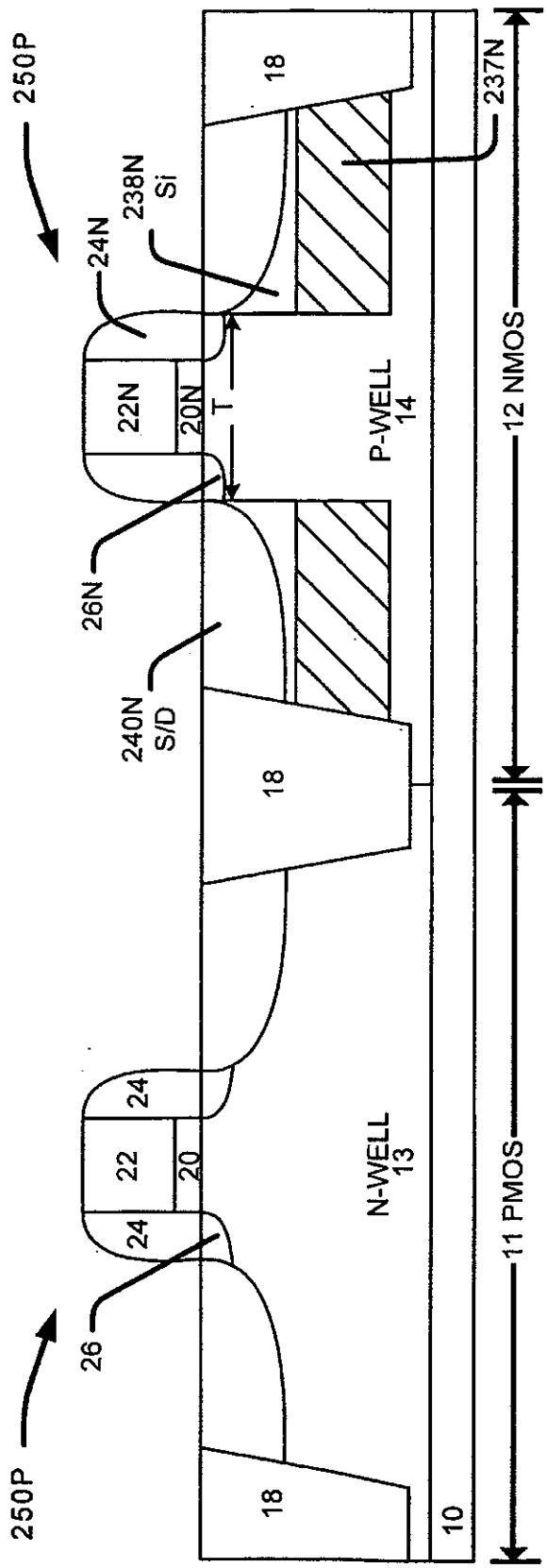
250P
24N
238N
Si
18
237N
22N
20N
T
P-WELL
14
12 NMOS
26N
240N
S/D
18
24
22
20
24
N-WELL
13
11 PMOS
26
250P
18
10

FIGURE 2E

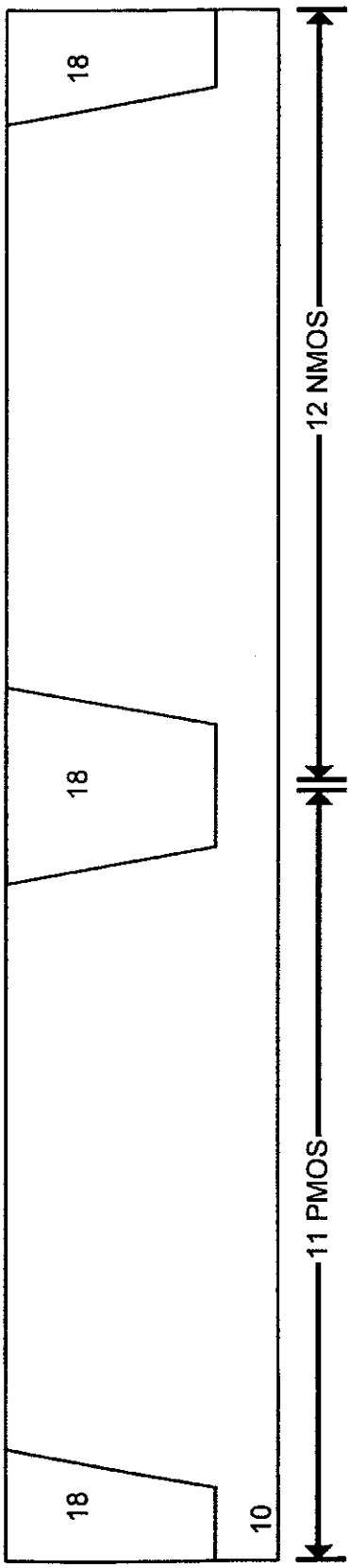

FIGURE 3A

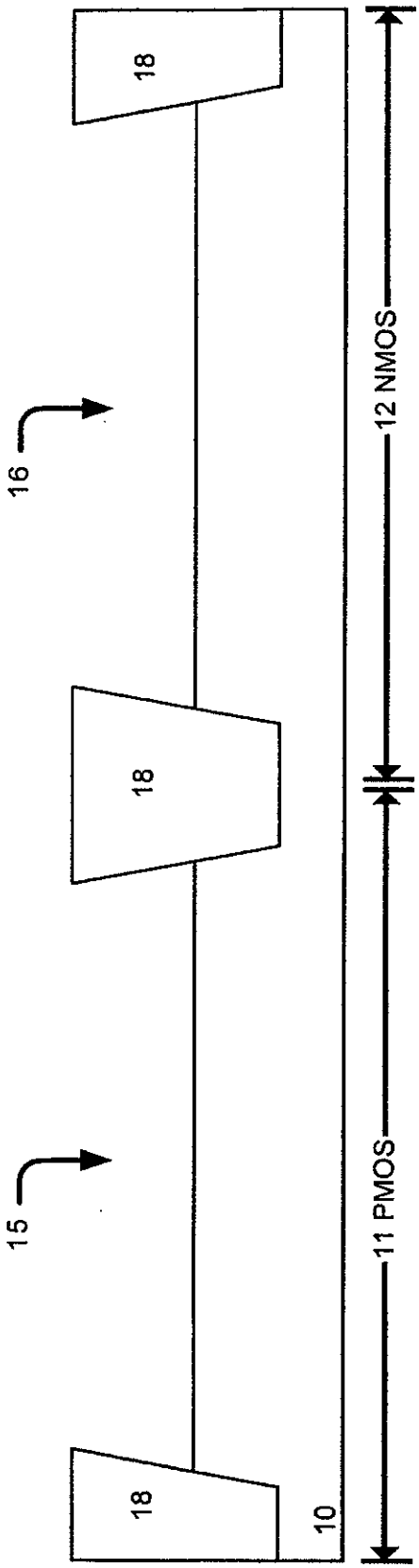

FIGURE 3B

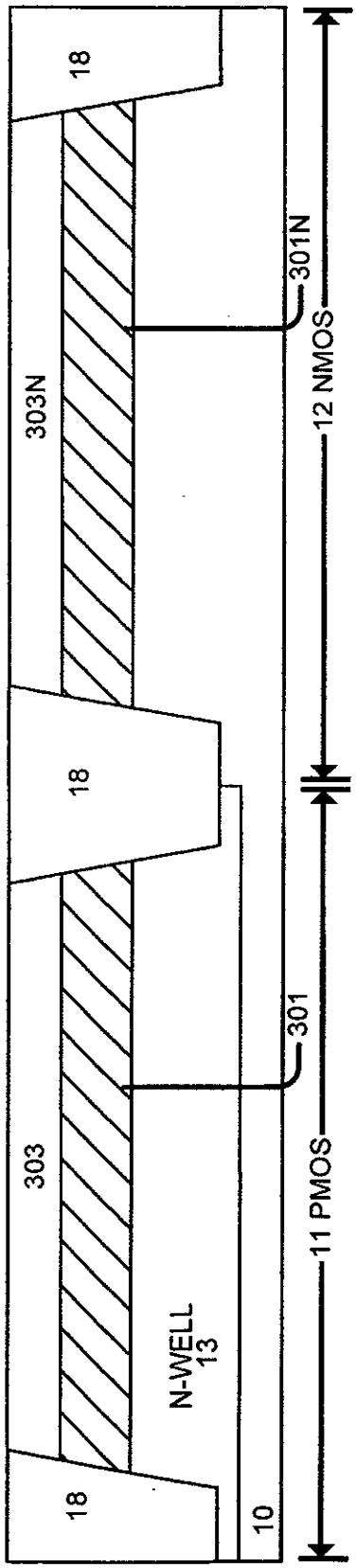

FIGURE 3C

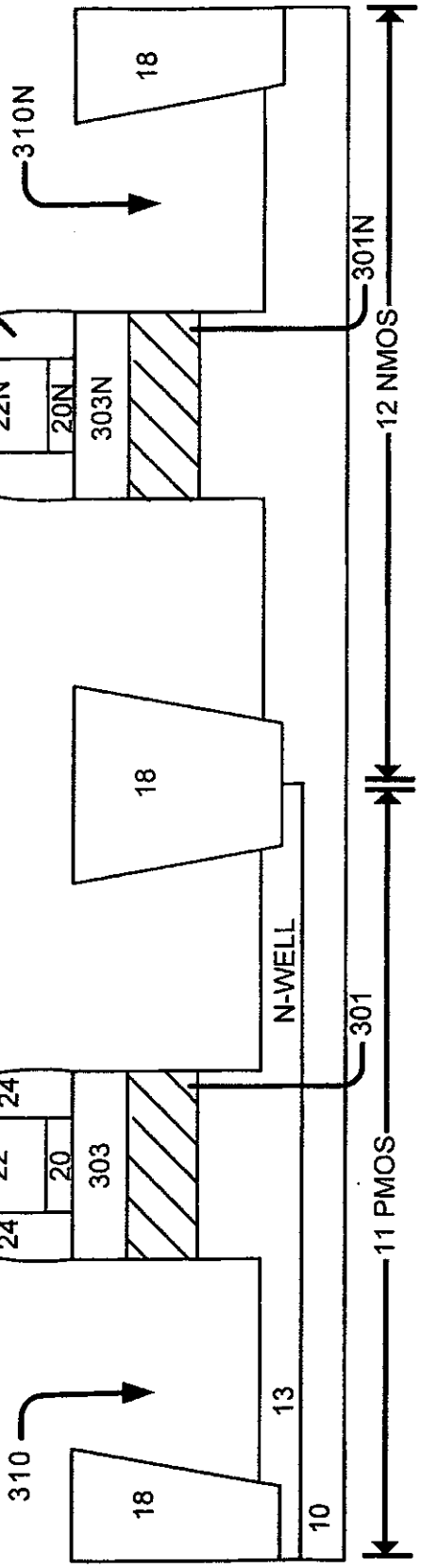

FIGURE 3D

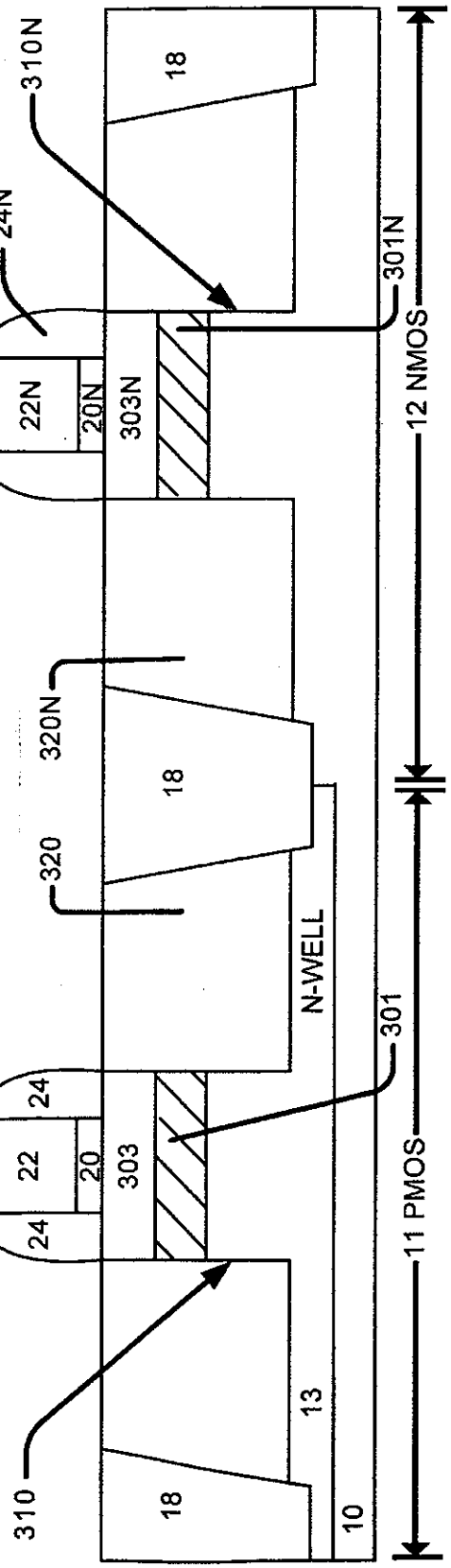

FIGURE 3E

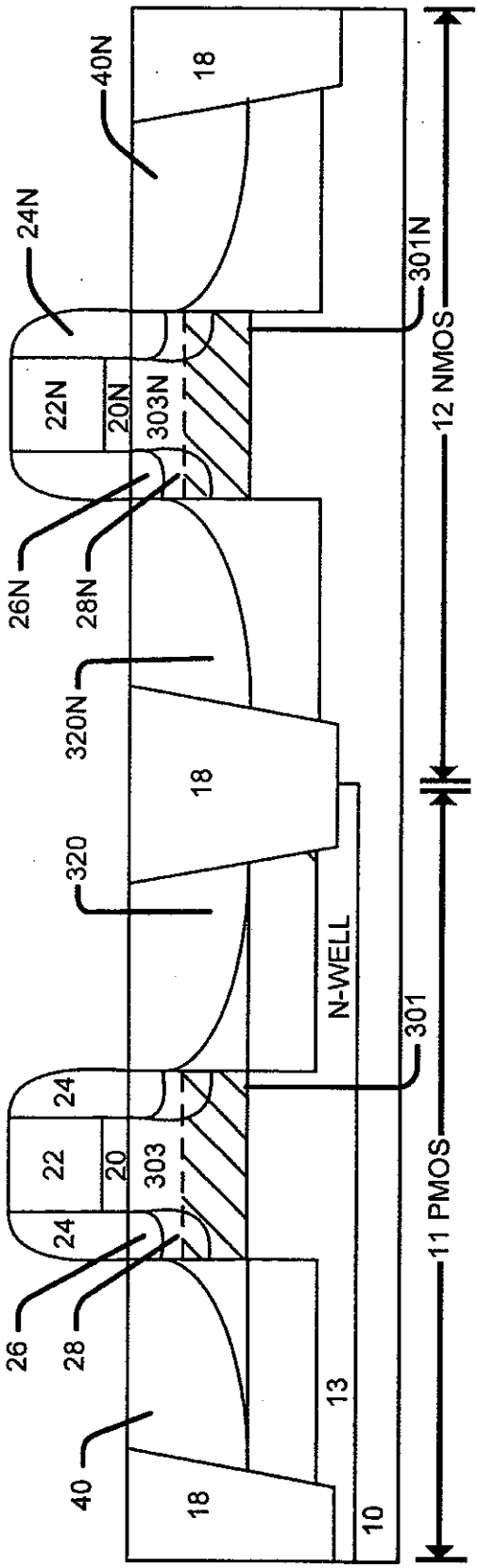

FIGURE 3F

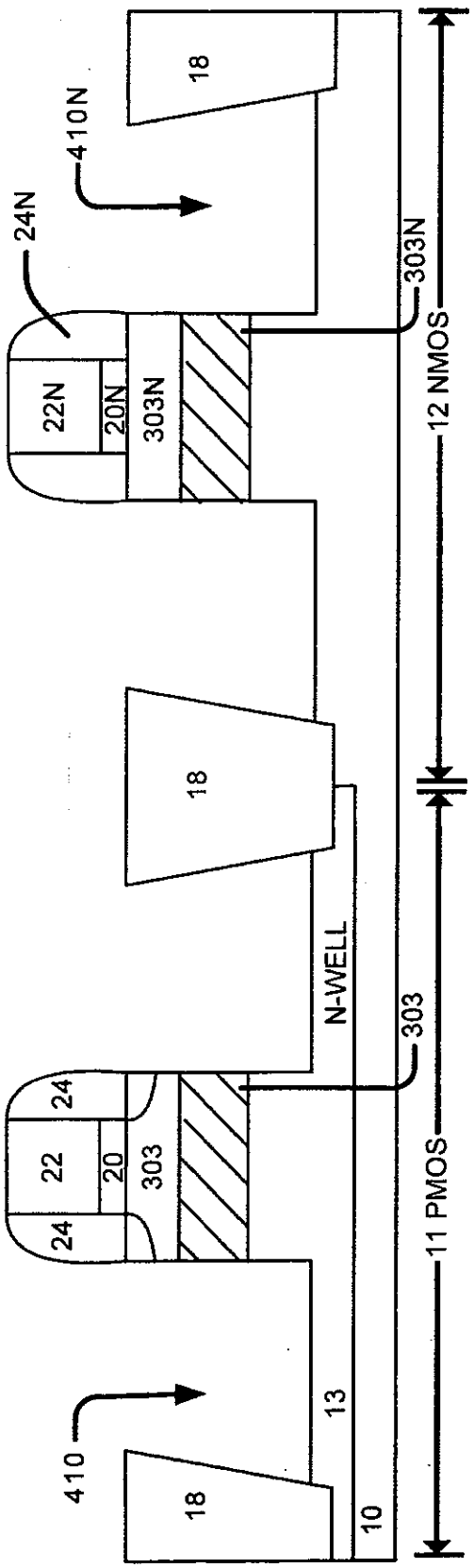

FIGURE 4A

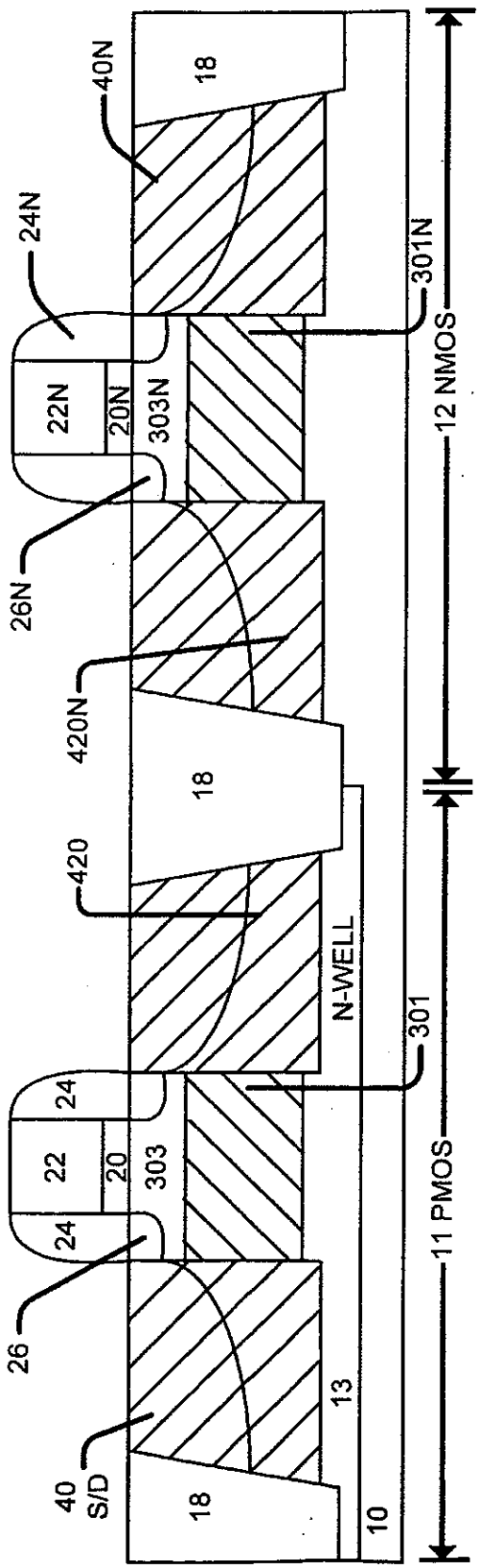

FIGURE 4B

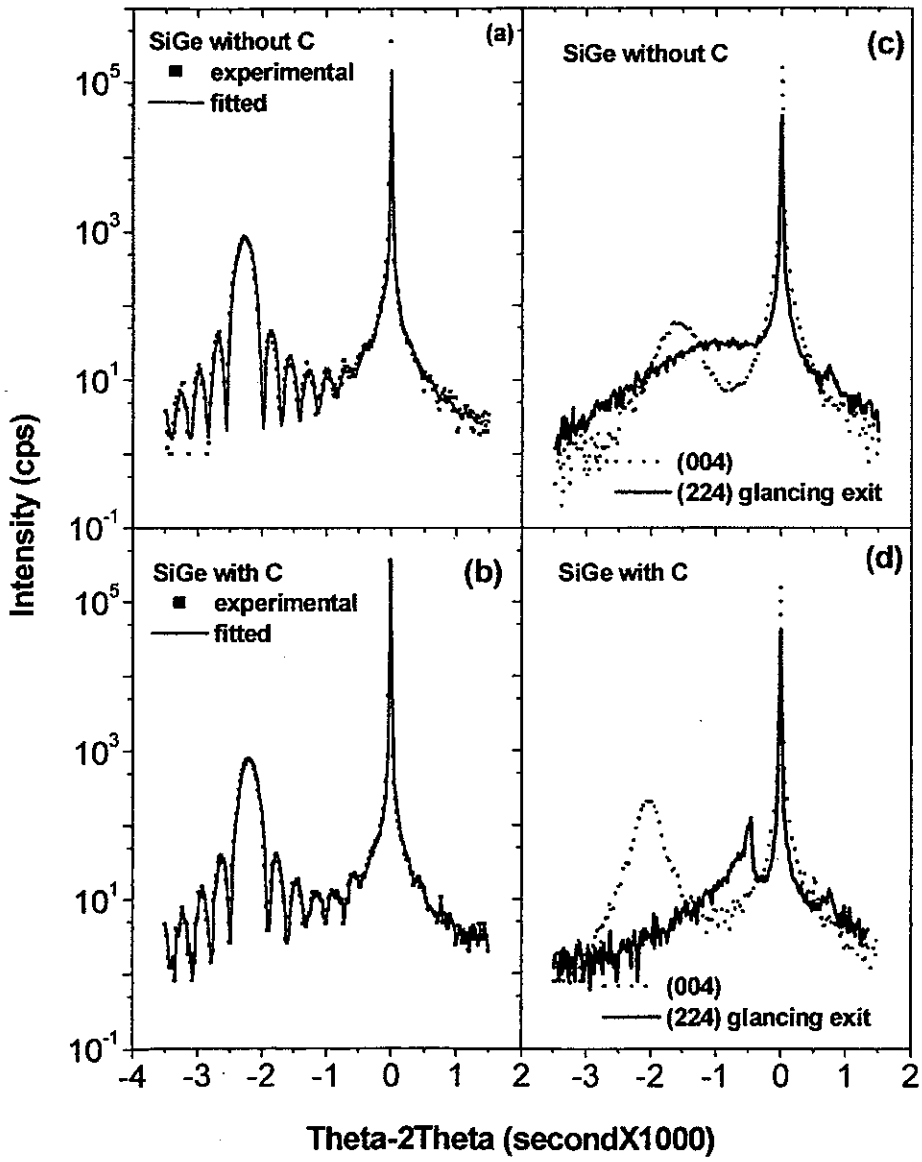
SiGe without C
experimental
fitted
(a)
SiGe without C
(c)
(004)
(224) glancing exit
SiGe with C
experimental
fitted
(b)
SiGe with C
(d)
(004)
(224) glancing exit
Intensity (cps)
Theta-2Theta (secondX1000)

FIGURE 5A

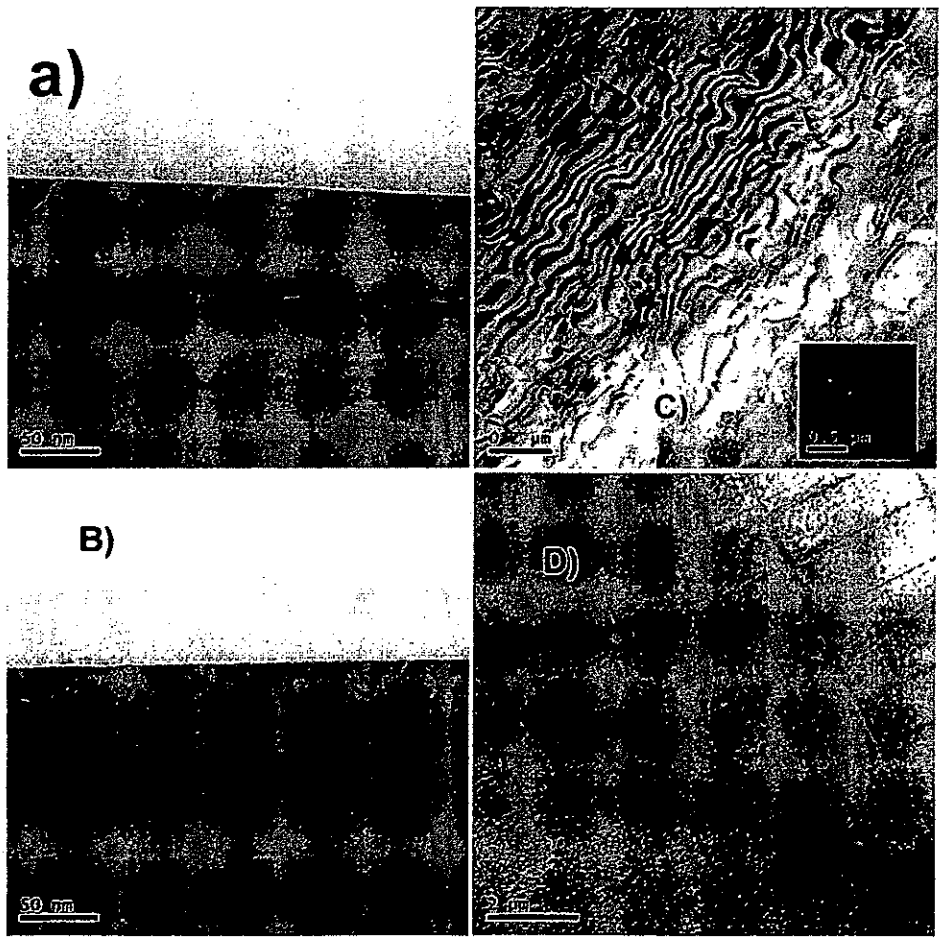

FIGURE 5B

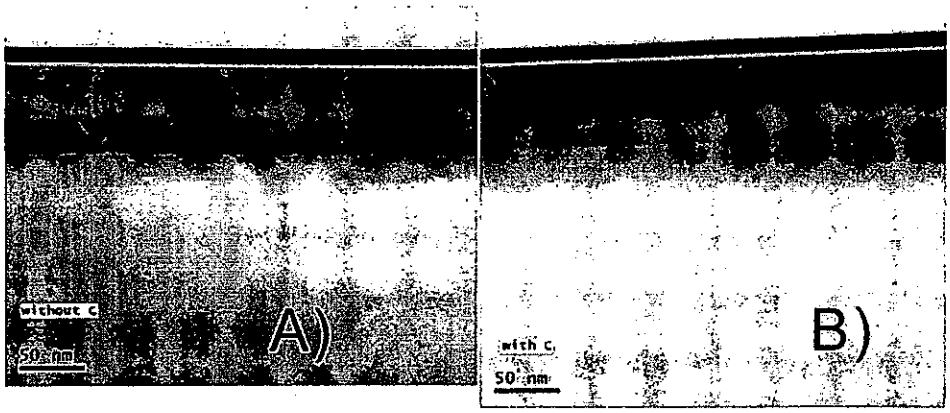

FIGURE 5C

Table 1

IMPlant process 57KeV, 5.2e13 As

Process	Stress (As deposited)	After As implant+RTA	Percentage of the retained stress
SiGe POS Without B	-1.65E+09	-2.98E+08	18.07
with MMS, CN=0.5 sccm	-1.64E+09	-8.17E+08	49.83
with MMS, CN=1.2 sccm	-1.52E+09	-8.05E+08	52.84

Table 2

IMPlant process 3KeV, 6e14, BF2

Process	Stress (As deposited)	After BF2 implant+RTA	Percentage of the retained stress
SiGe POS Without B	-1.65E+09	-1.56E+09	94.29
with MMS, CN=0.5 sccm	-1.64E+09	-1.55E+09	94.82
with MMS, CN=1.2 sccm	-1.52E+09	-1.46E+09	95.88

table 3

IMPlant process 7KeV, 1.5e15 B

Process	Stress (As deposited)	After B implant+RTA	Percentage of the retained stress
SiGe POS Without B	-1.65E+09	-6.10E+08	36.94
with MMS, CN=0.5 sccm	-1.64E+09	-1.03E+09	62.86
with MMS, CN=1.2 sccm	-1.52E+09	-1.25E+09	82.22

table 4

IMPlant process 17KeV, 2.5e15, BF2

Process	Stress (As deposited)	After BF2 implant+RTA	Percentage of the retained stress
SiGe POS Without B	-1.65E+09	-8.02E+08	48.62
with MMS, CN=0.5 sccm	-1.64E+09	-9.89E+08	60.35
with MMS, CN=1.2 sccm	-1.52E+09	-1.05E+09	69.13

FIGURE 6A

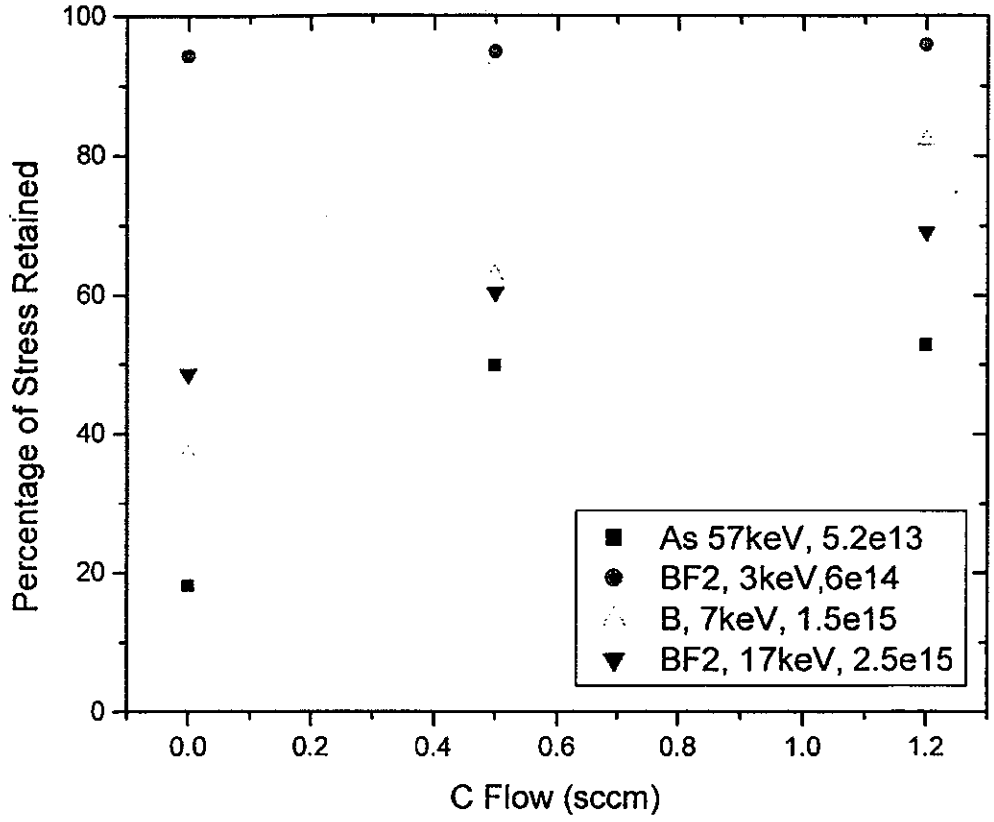
Percentage of Stress Retained
100
80
60
40
20
0
0.0
0.2
0.4
0.6
0.8
1.0
1.2
C Flow (sccm)
As 57keV, 5.2e13
BF2, 3keV,6e14
B, 7keV, 1.5e15
BF2, 17keV, 2.5e15

FIGURE 6B