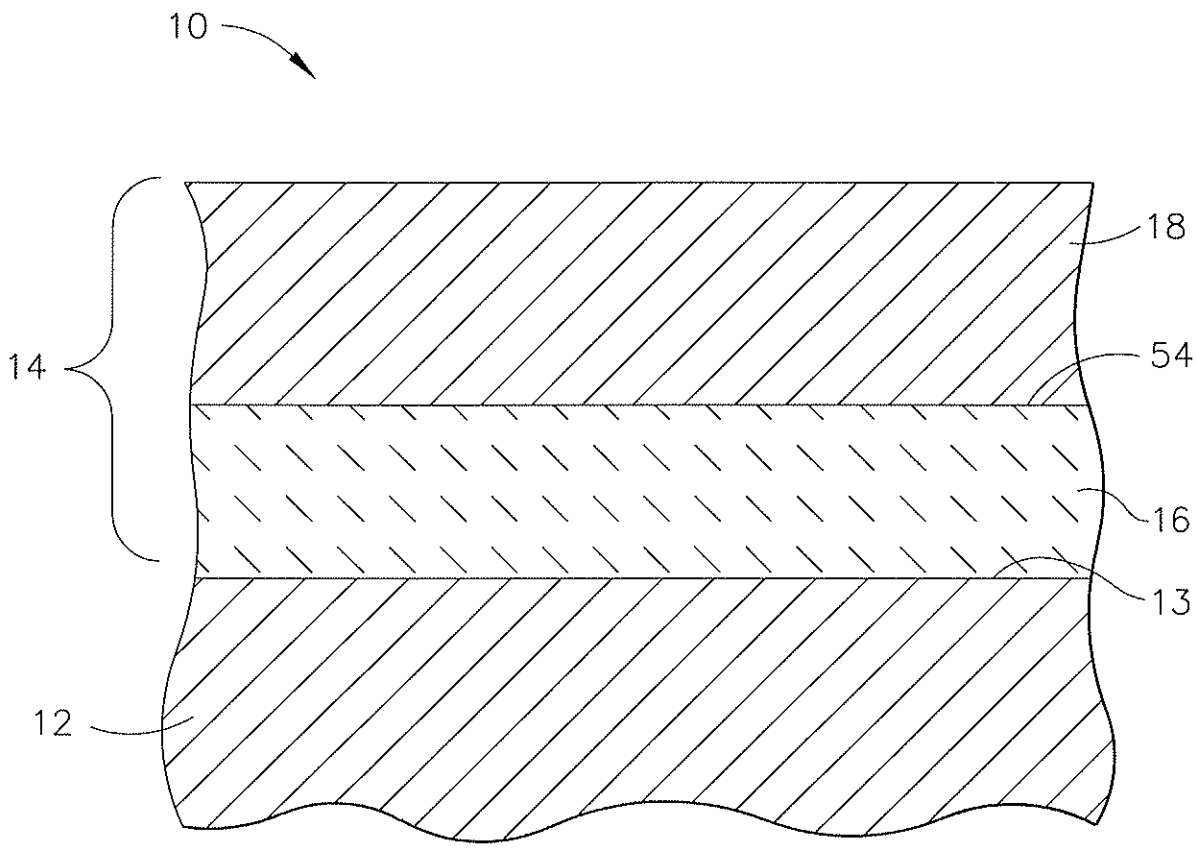

FIG. 1

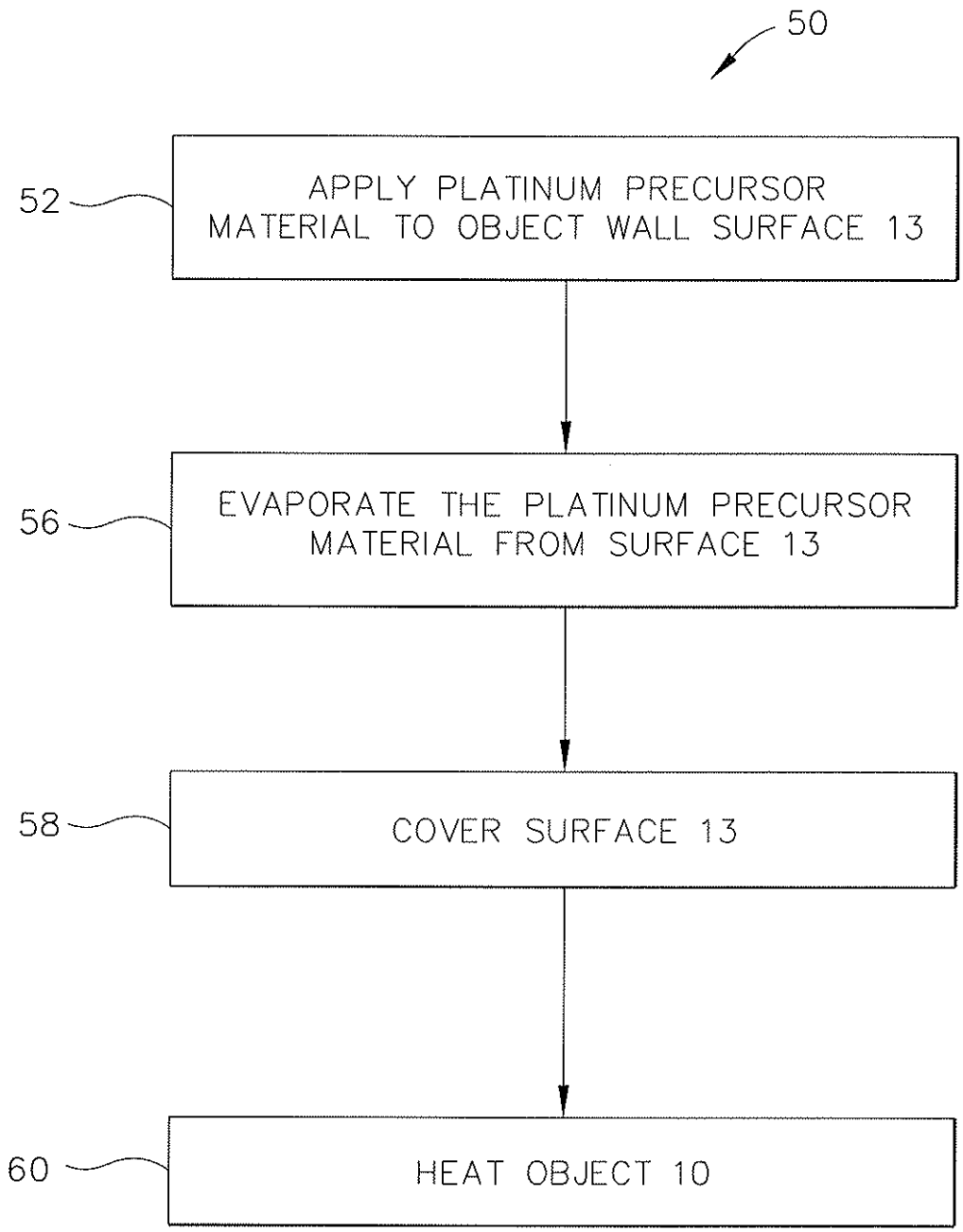
50
52
APPLY PLATINUM PRECURSOR MATERIAL TO OBJECT WALL SURFACE 13
56
EVAPORATE THE PLATINUM PRECURSOR MATERIAL FROM SURFACE 13
58
COVER SURFACE 13
60
HEAT OBJECT 10

FIG. 2