REPLACEMENT DRAWINGS

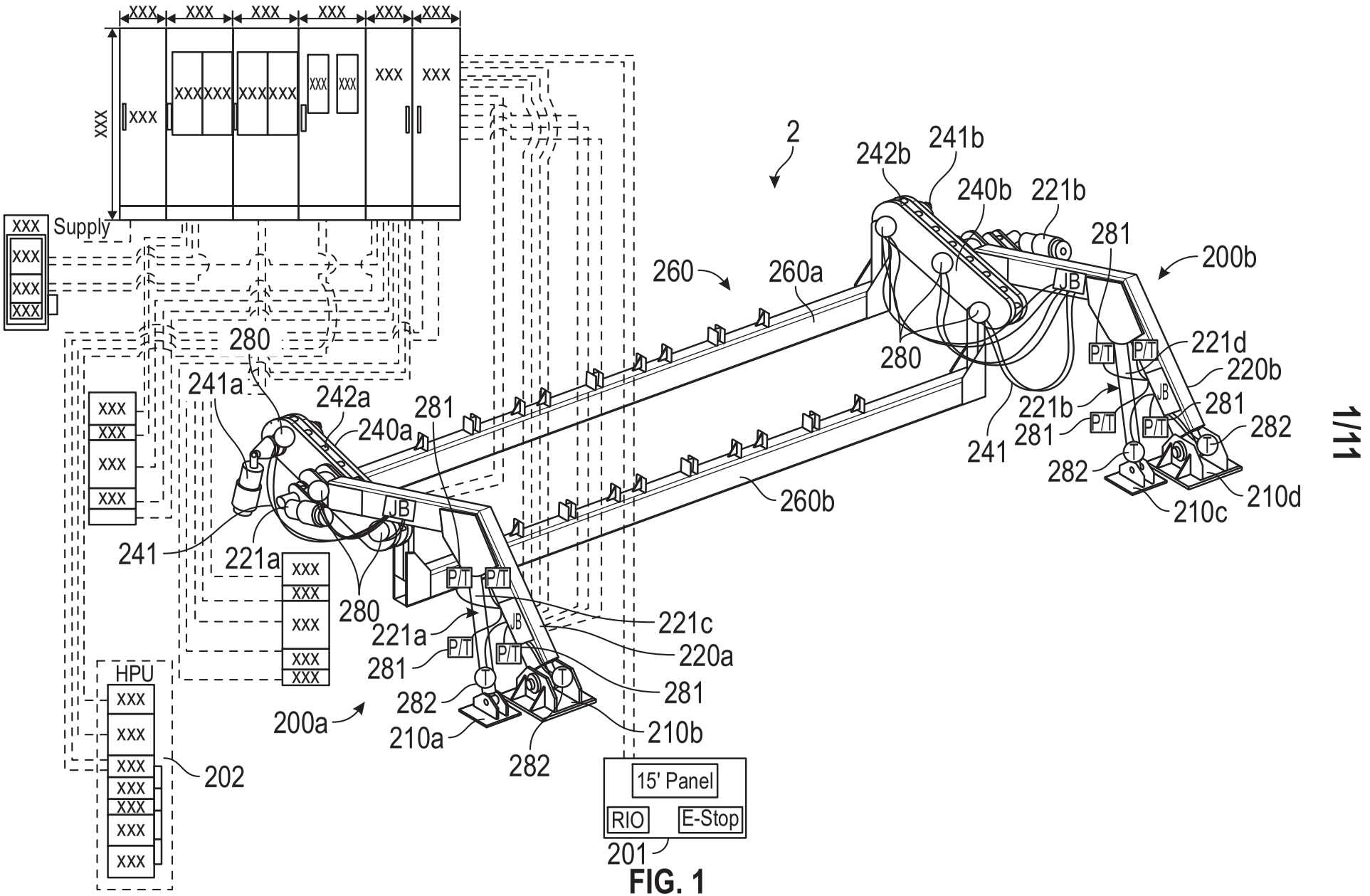

FIG. 1

REPLACEMENT DRAWINGS

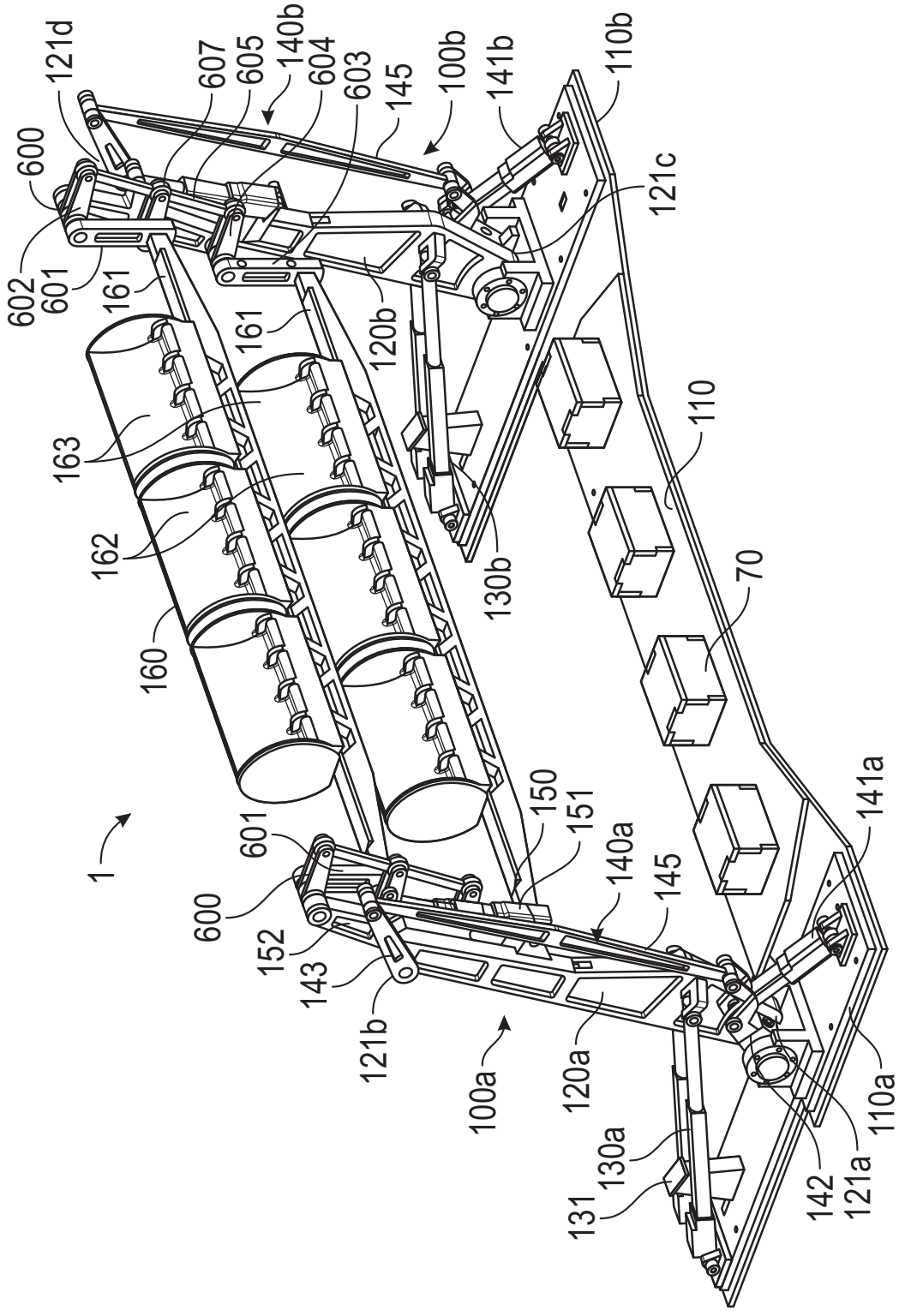

FIG. 2

REPLACEMENT DRAWINGS

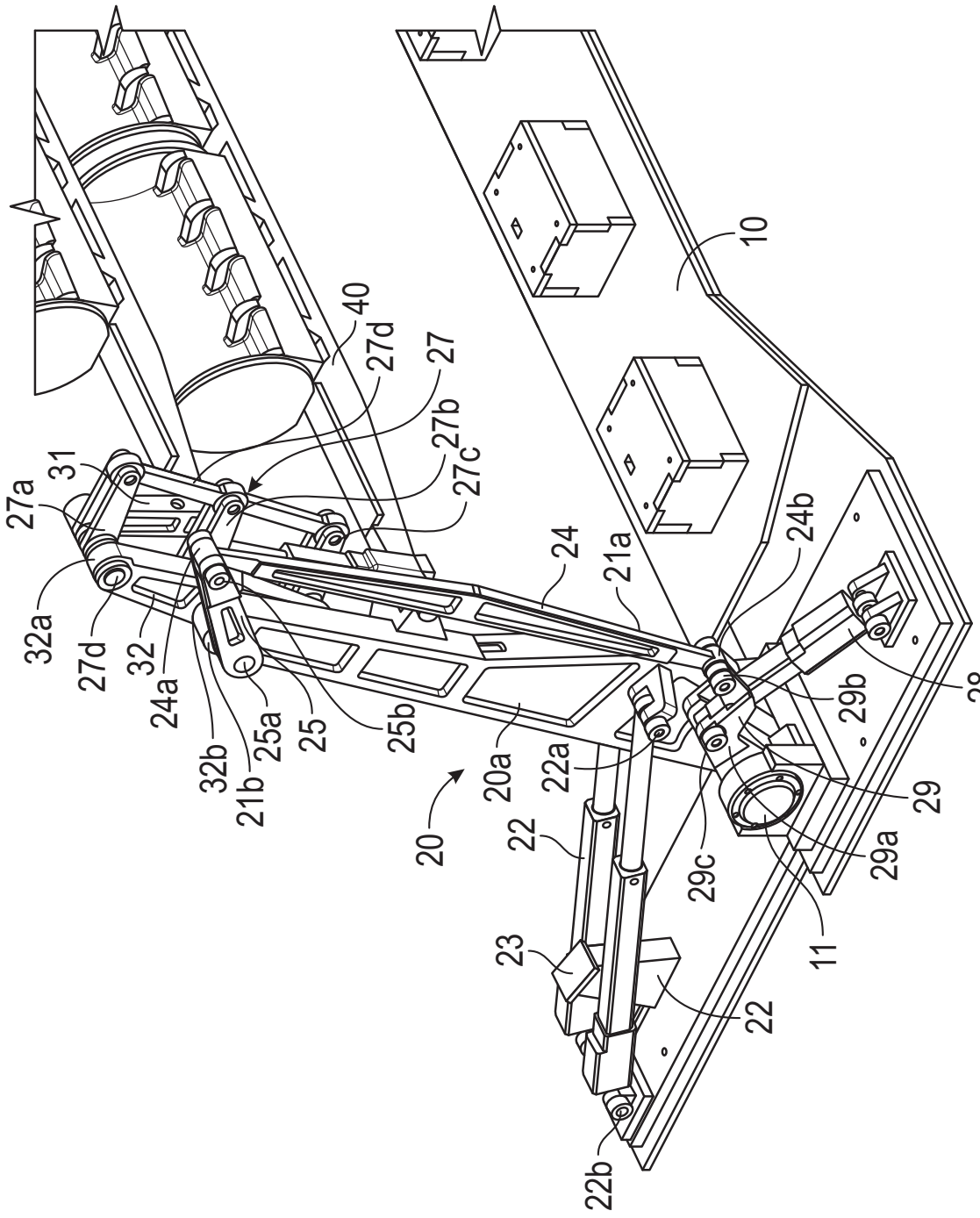

FIG. 3

REPLACEMENT DRAWINGS

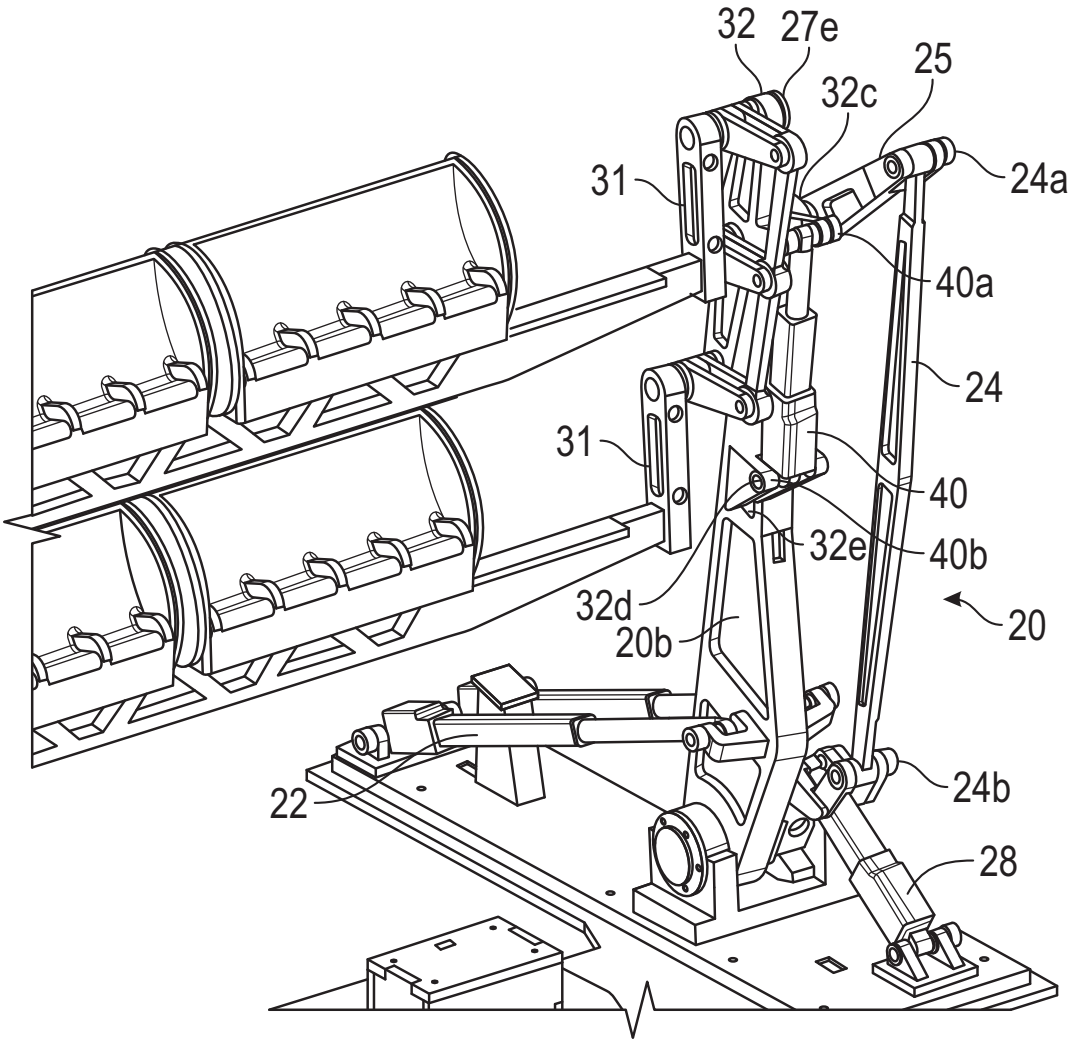

FIG. 4

REPLACEMENT DRAWINGS

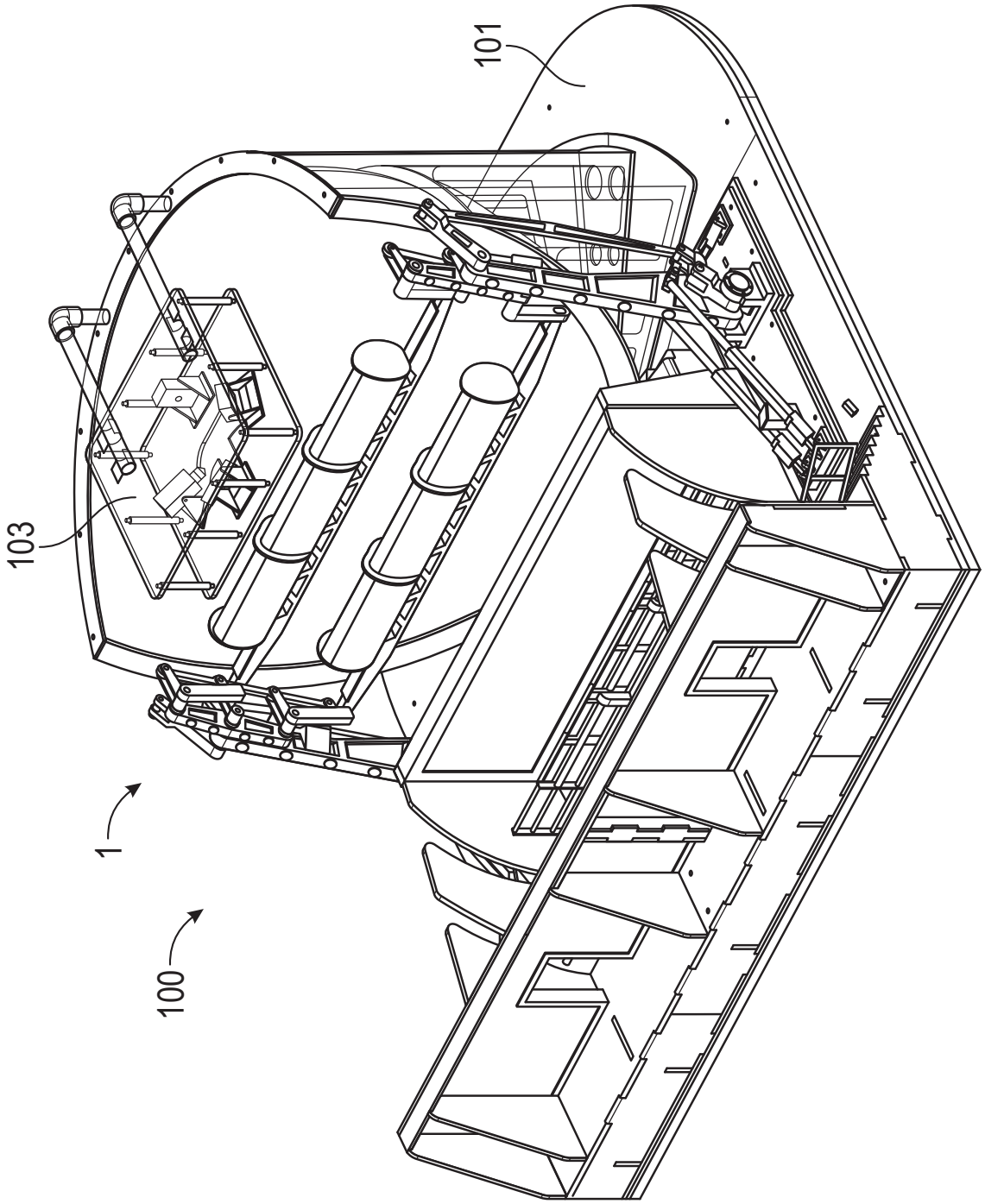

FIG. 5

REPLACEMENT DRAWINGS

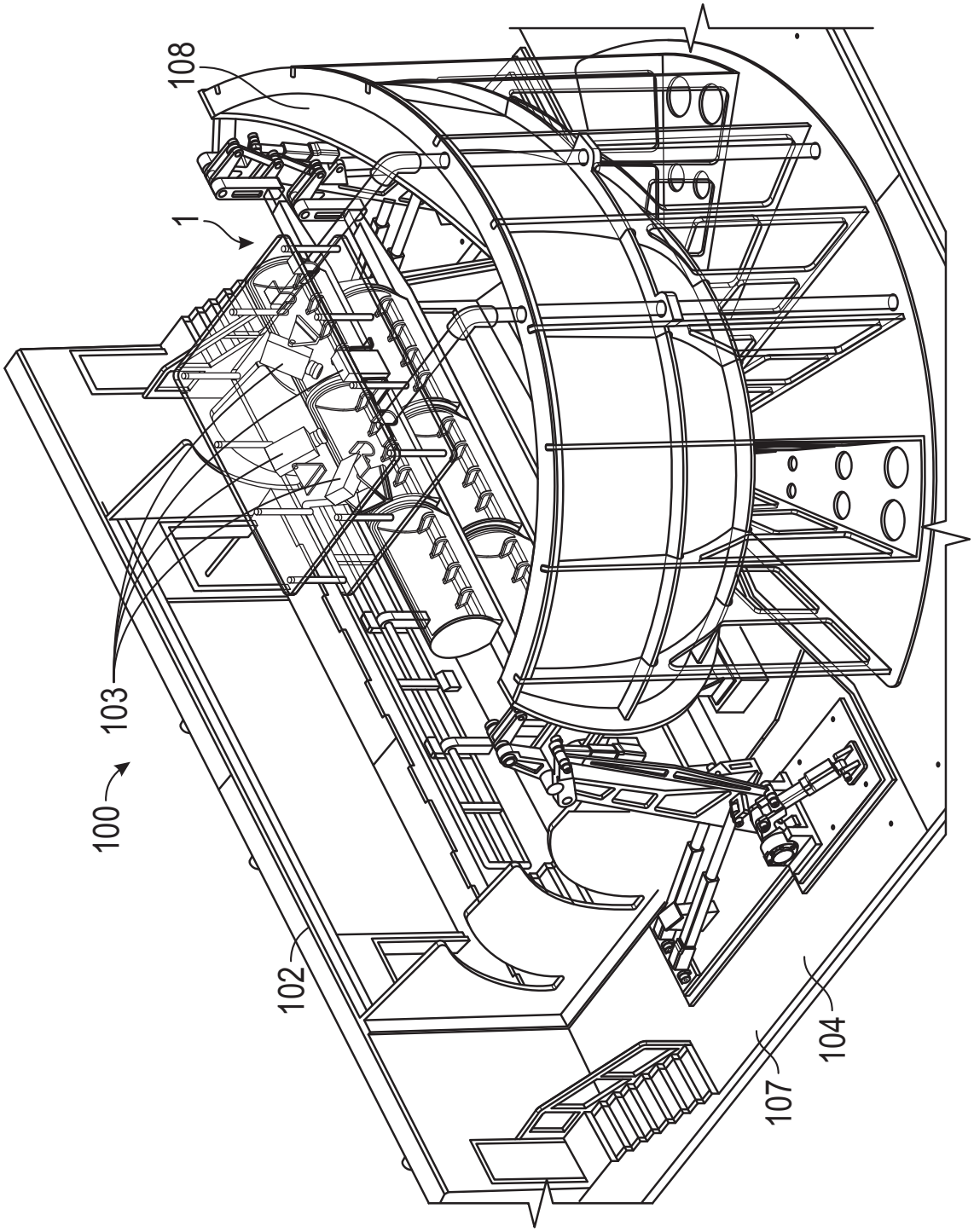

FIG. 6

REPLACEMENT DRAWINGS

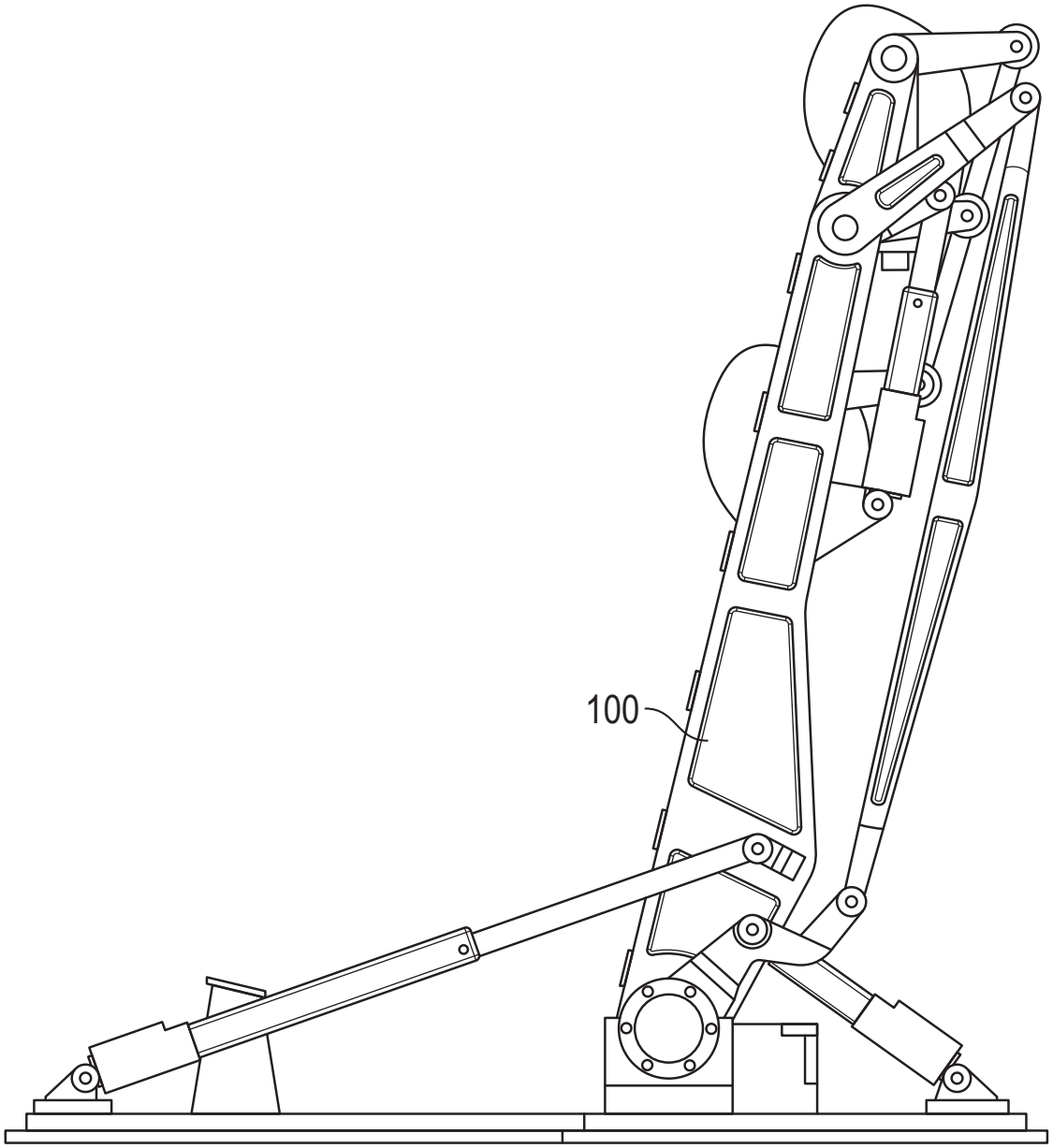

FIG. 7

REPLACEMENT DRAWINGS

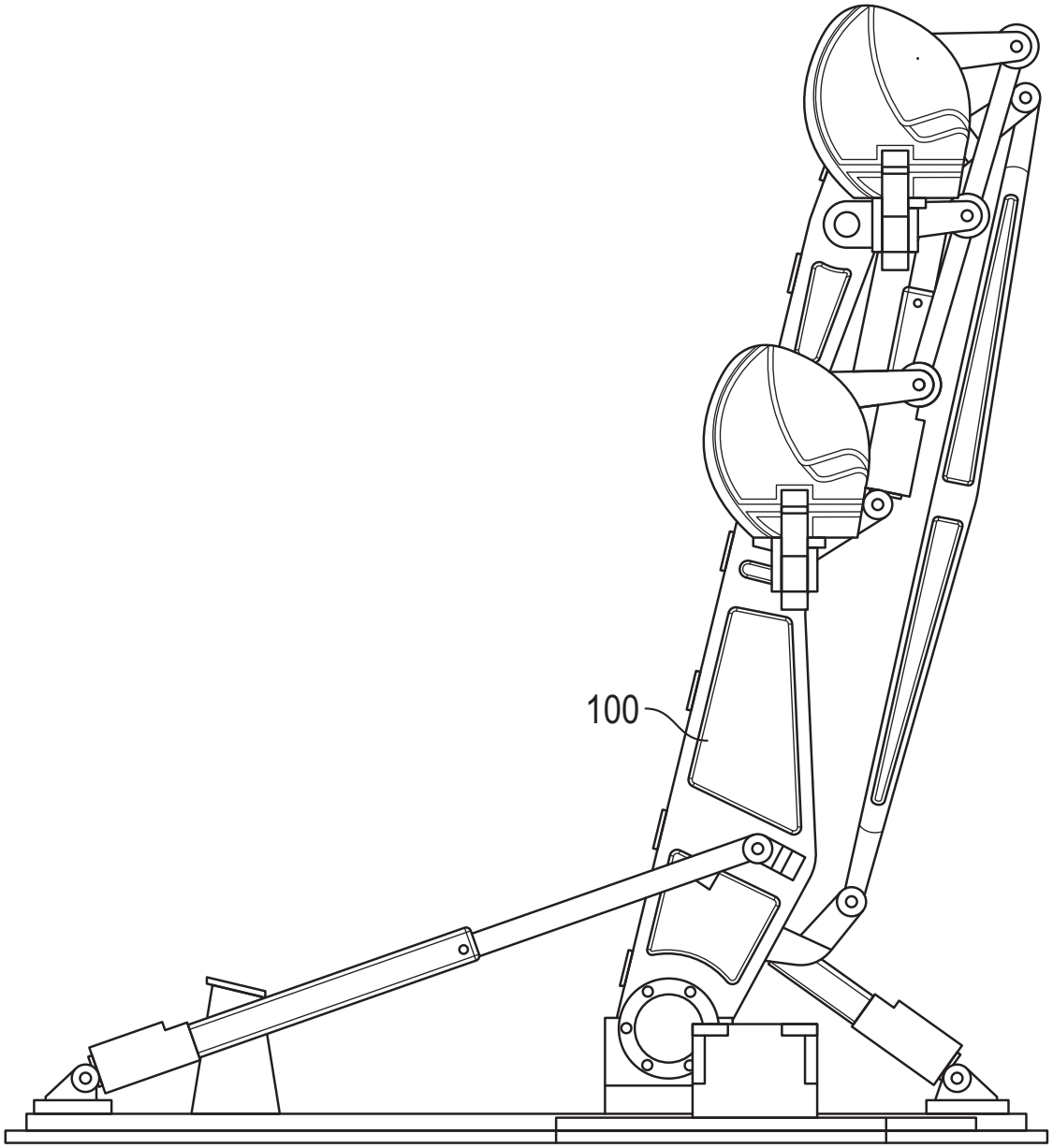

FIG. 8

REPLACEMENT DRAWINGS

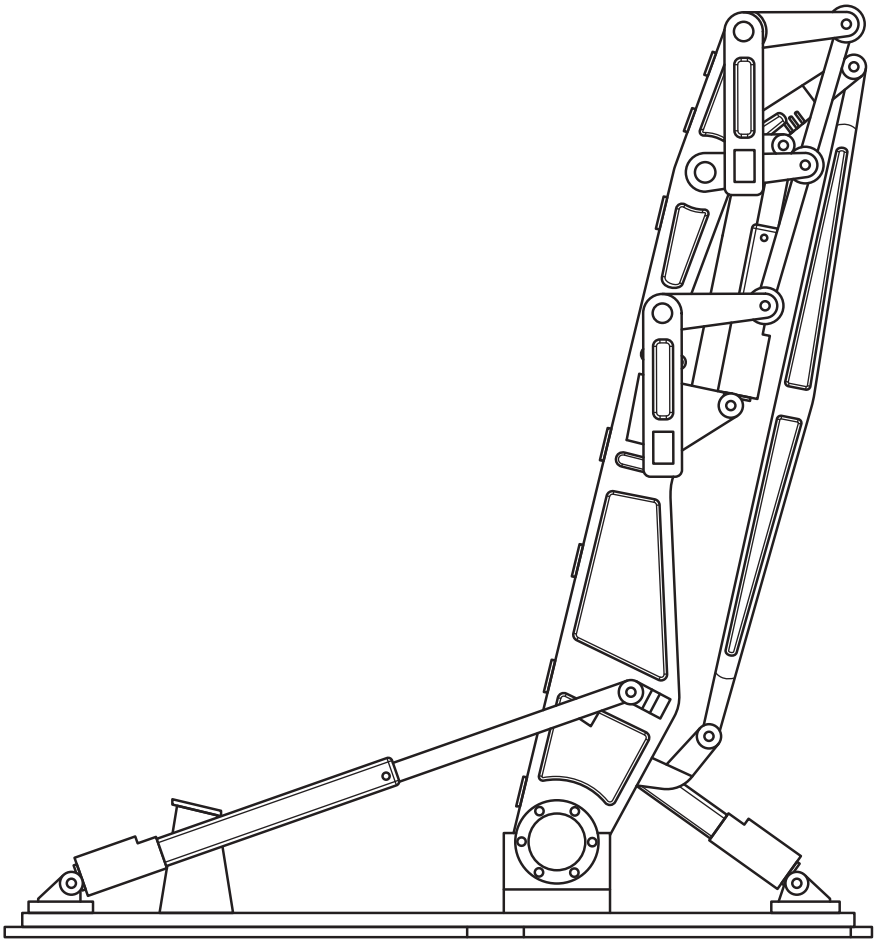

FIG. 9

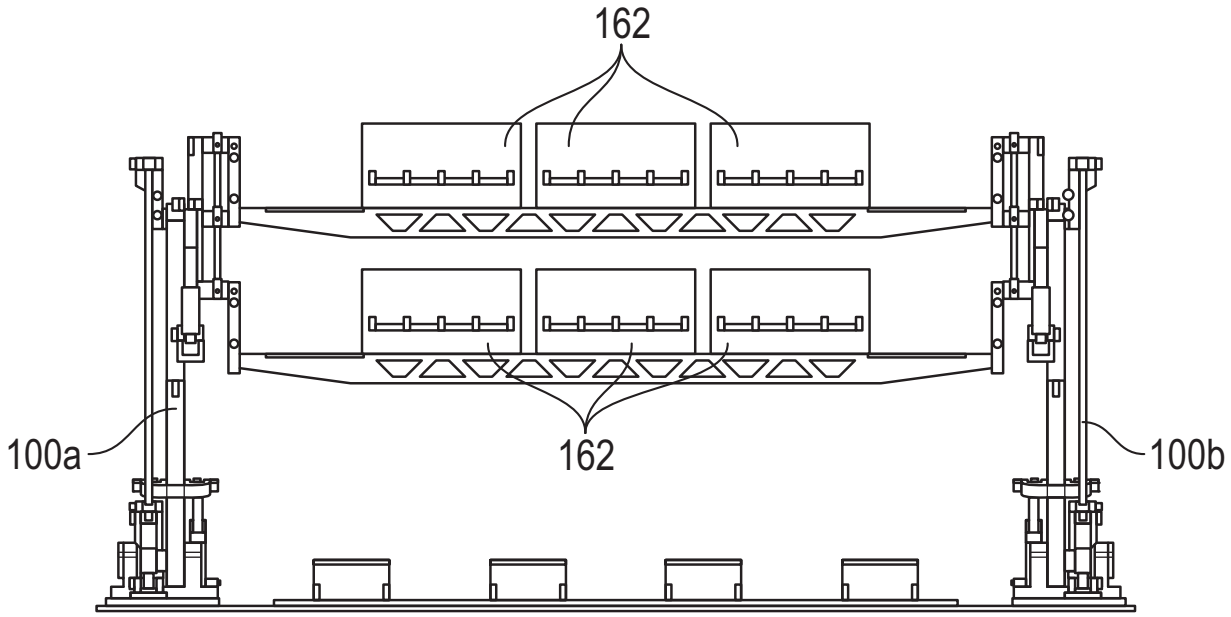

FIG. 10

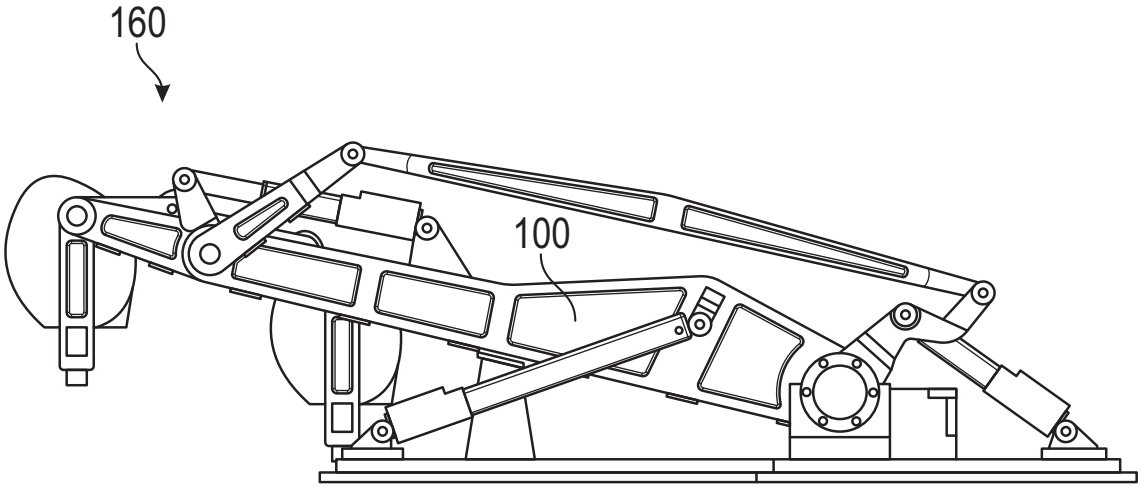

FIG. 11

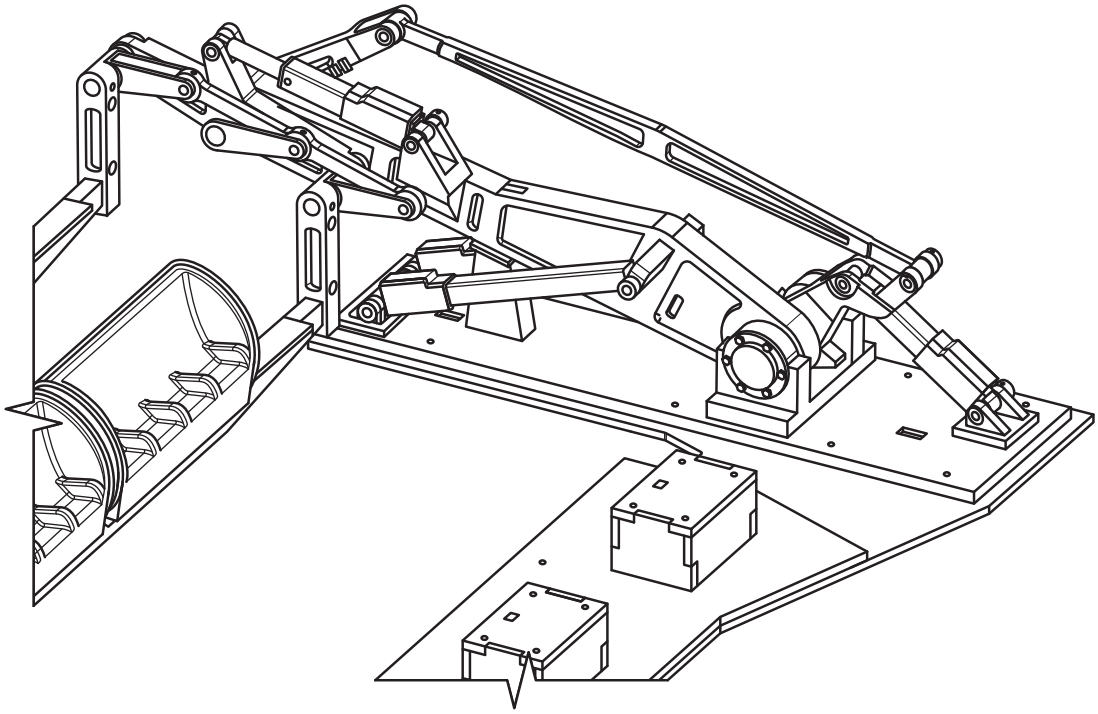

FIG. 12

REPLACEMENT DRAWINGS

REPLACEMENT DRAWINGS

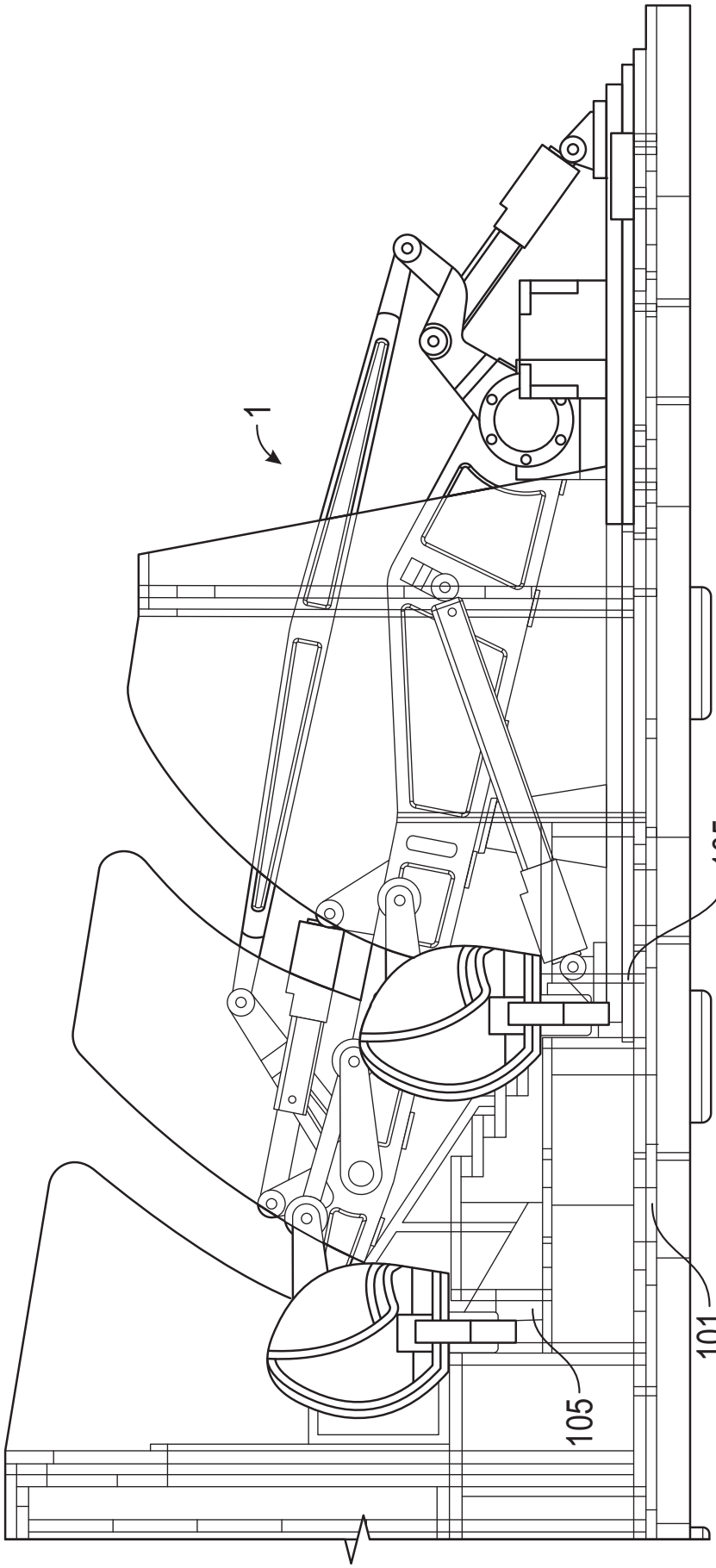

FIG. 13