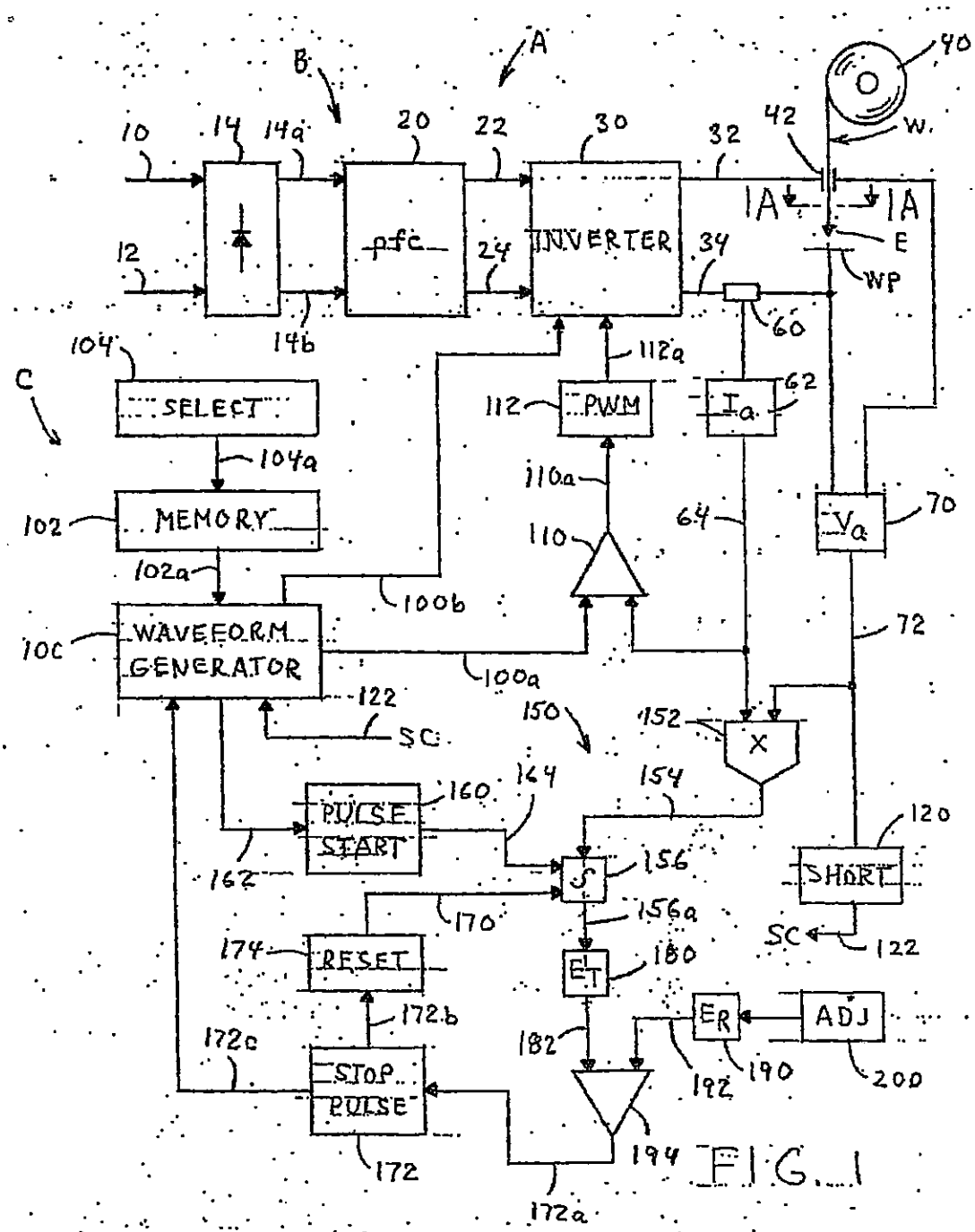
A
B
C
10
12
14
14a
14b
20
pfc
22
24
30
INVERTER
32
34
40
42
W
IA
IA
E
WP
60
104
SELECT
104a
102
MEMORY
102a
100b
100a
10C
WAVEFORM GENERATOR
122
SC
112
PWM
112a
110a
110
Ia
62
64
Va
70
72
150
152
X
154
160
PULSE START
162
164
156
156a
170
174
RESET
172b
172c
STOP PULSE
172
172a
ET
180
182
ER
190
192
ADJ
200
194
120
SHORT
SC
122

FIG. 1

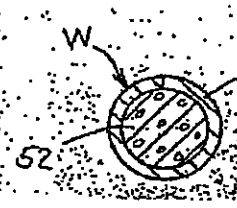
W
50
52

FIG. 1A

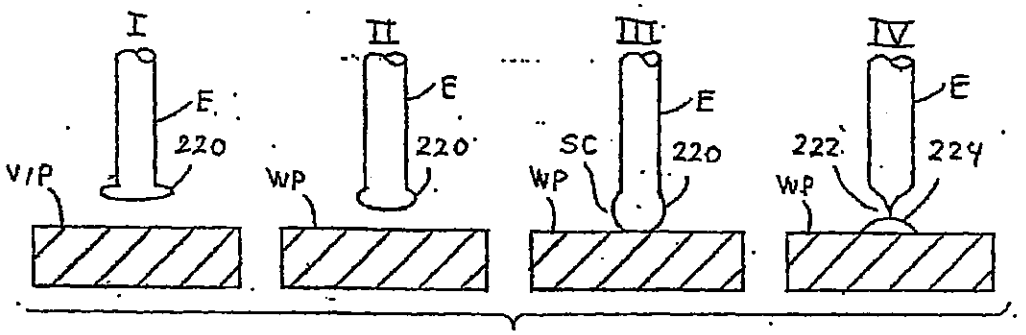
I
II
III
IV
E
220
222
224
SC
WP
VIP

FIG. 2

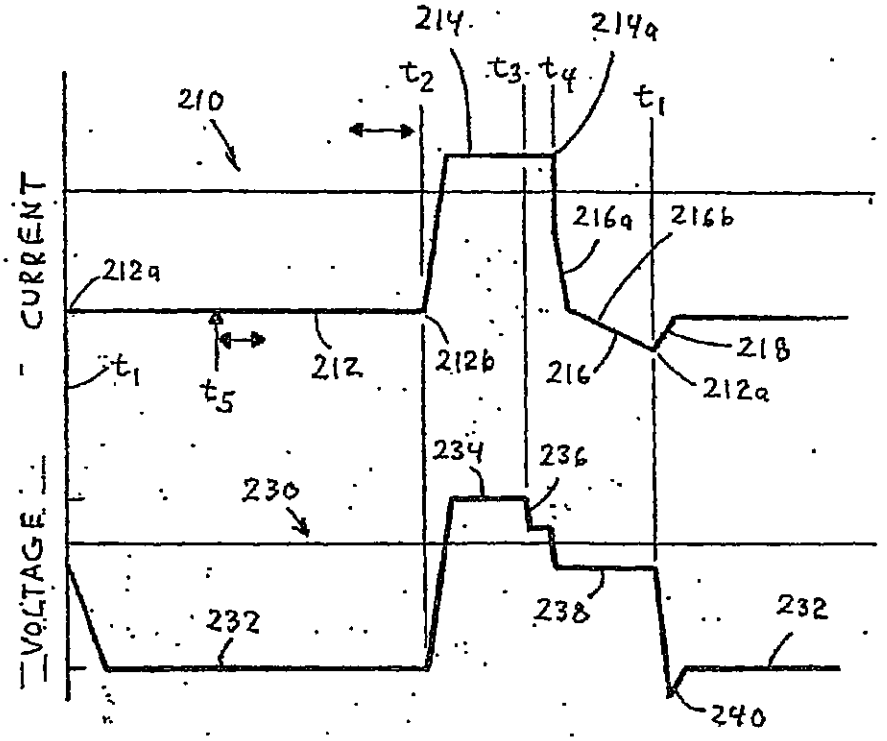
214
214a
t_2
t_3
t_4
t_1
210
216a
216b
212a
t_1
t_5
212
212b
216
218
212a
234
236
230
232
238
232
240
CURRENT
VOLTAGE

FIG. 3

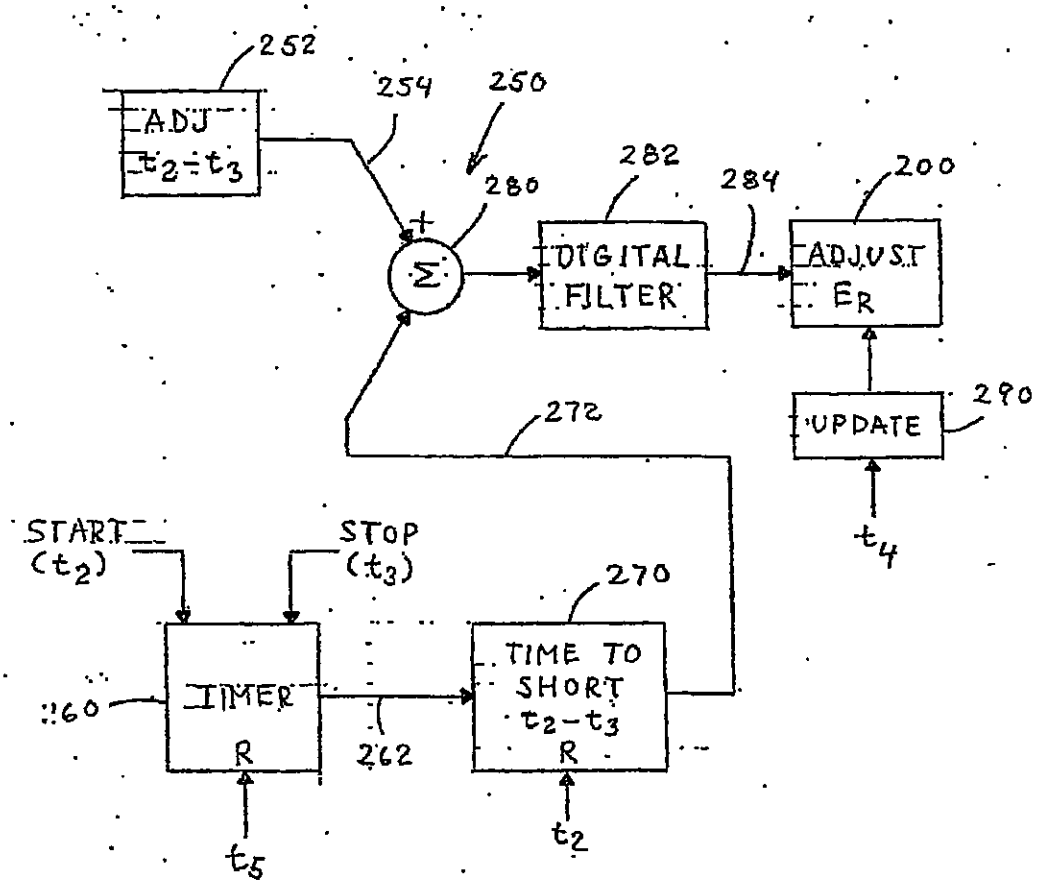
252
ADJ
$t_2 - t_3$
254
250
280
+
Σ
282
DIGITAL FILTER
284
200
ADJUST E_R
UPDATE
290
272
START (t_2)
STOP (t_3)
270
260
TIMER
R
262
TIME TO SHORT
$t_2 - t_3$
R
t_4
t_5
t_2

FIG. 4

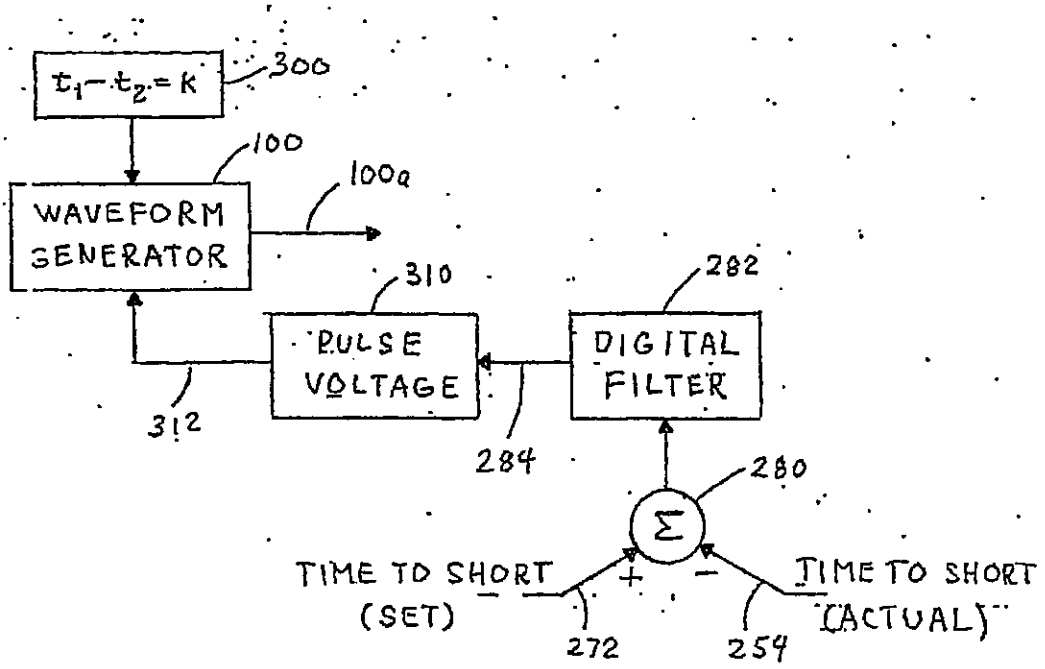
$t_1 - t_2 = K$
300
100
100a
WAVEFORM GENERATOR
310
282
PULSE VOLTAGE
DIGITAL FILTER
312
284
280
Σ
TIME TO SHORT (SET)
+
−
TIME TO SHORT (ACTUAL)
272
254

FIG. 5

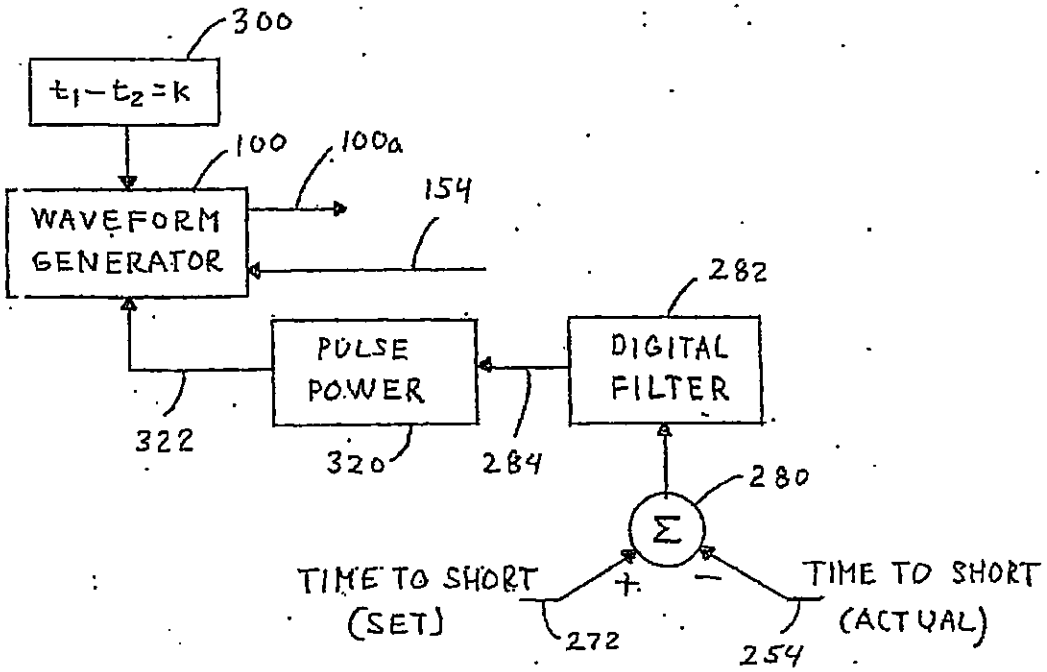
300
$t_1 - t_2 = K$
100
100a
154
WAVEFORM GENERATOR
282
PULSE POWER
DIGITAL FILTER
322
320
284
280
Σ
TIME TO SHORT (SET)
+
−
TIME TO SHORT (ACTUAL)
272
254

FIG. 6

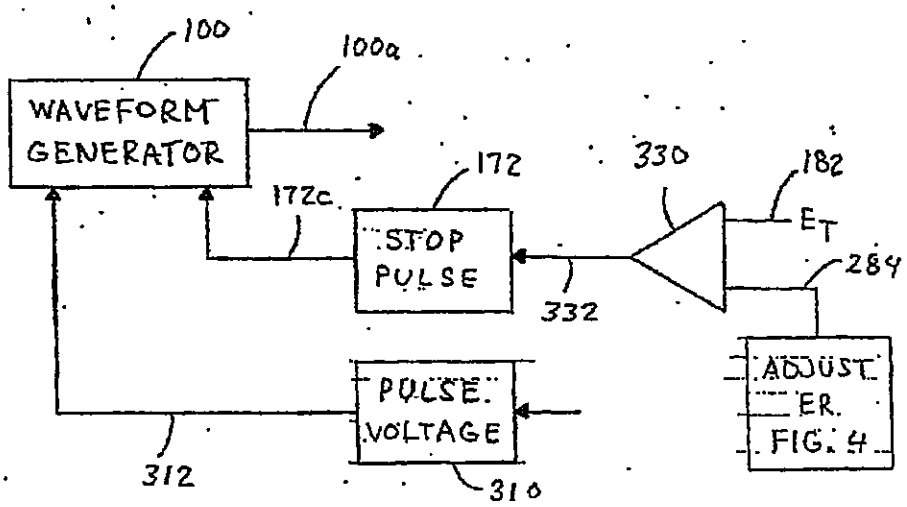
100
100a
WAVEFORM GENERATOR
172
330
182
172c
STOP PULSE
E_T
284
332
ADJUST ER. FIG. 4
PULSE VOLTAGE
312
310

FIG. 7

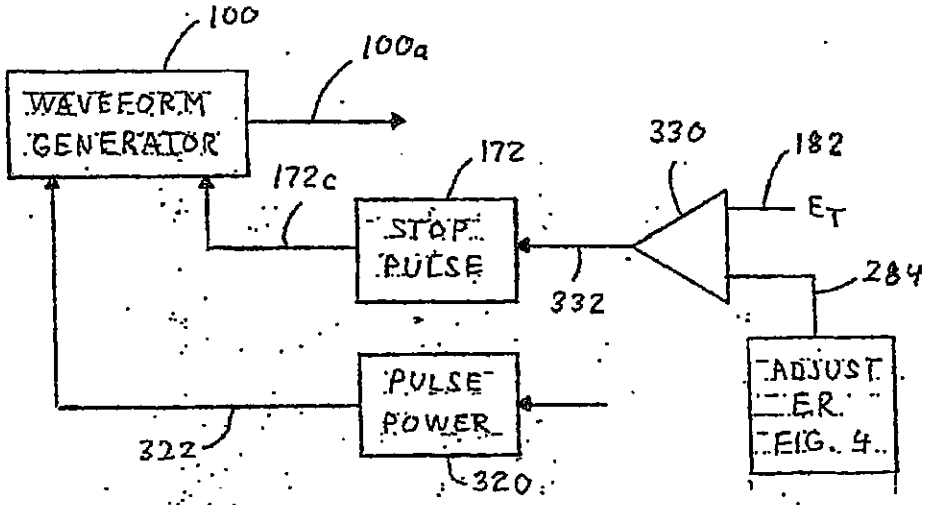
100
100a
WAVEFORM GENERATOR
172
330
182
172c
STOP PULSE
E_T
284
332
ADJUST ER. FIG. 4
PULSE POWER
322
320

FIG. 8

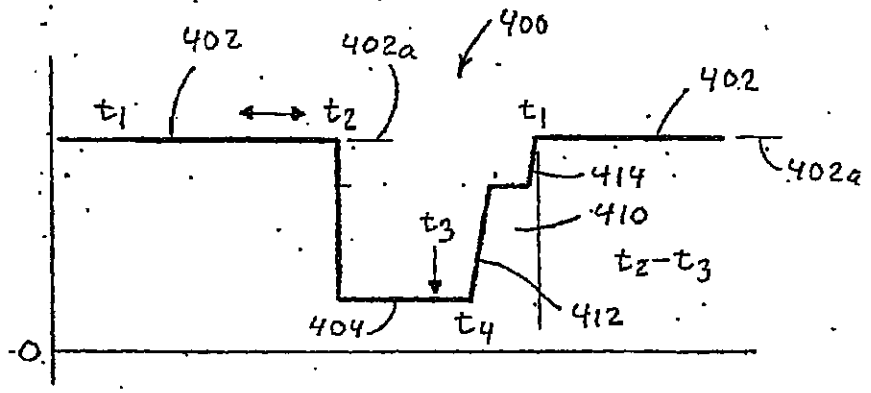
402
402a
400
t_1
t_2
t_1
402
414
402a
410
t_3
t_2-t_3
404
t_4
412
0

FIG. 9

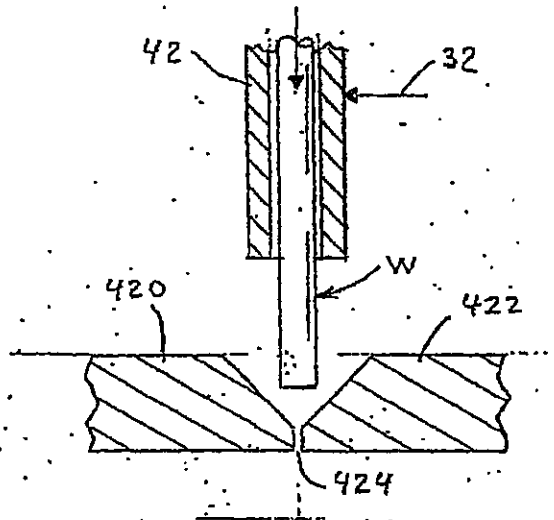
42
32
W
420
422
424

FIG. 10

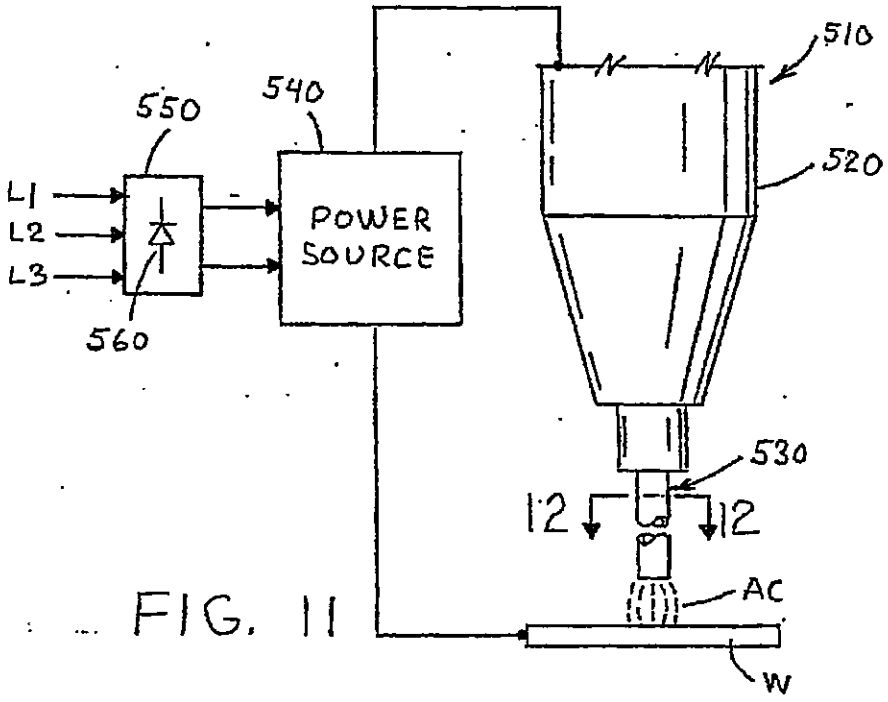
510
520
550
540
L1
L2
L3
POWER SOURCE
560
530
12
12
AC
W

FIG. 11

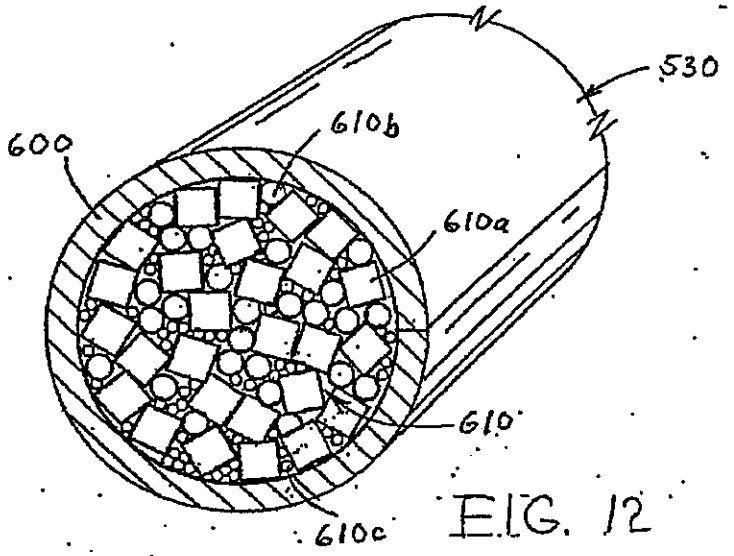
530
600
610b
610a
610
610c

FIG. 12

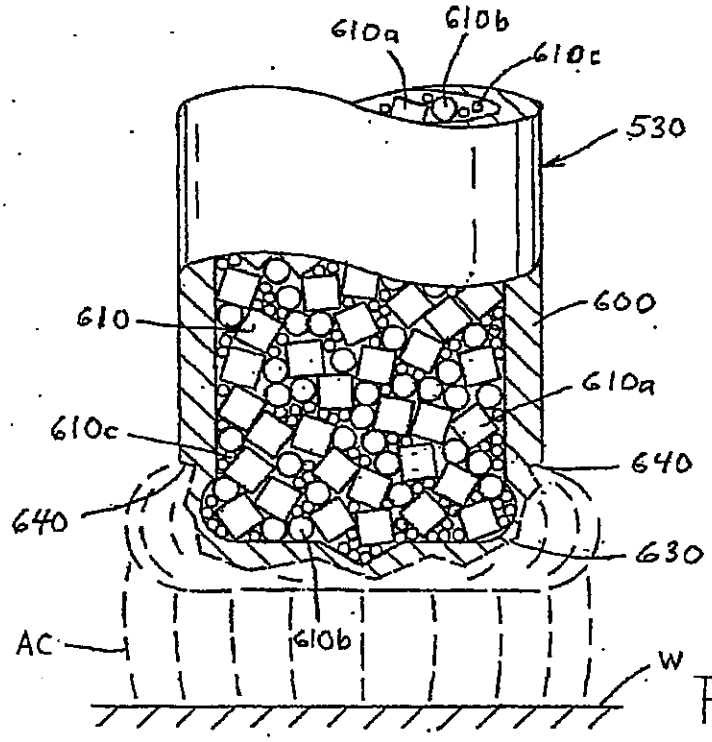
610a
610b
610c
530
610
600
610a
610c
640
640
630
AC
610b
W

FIG. 13

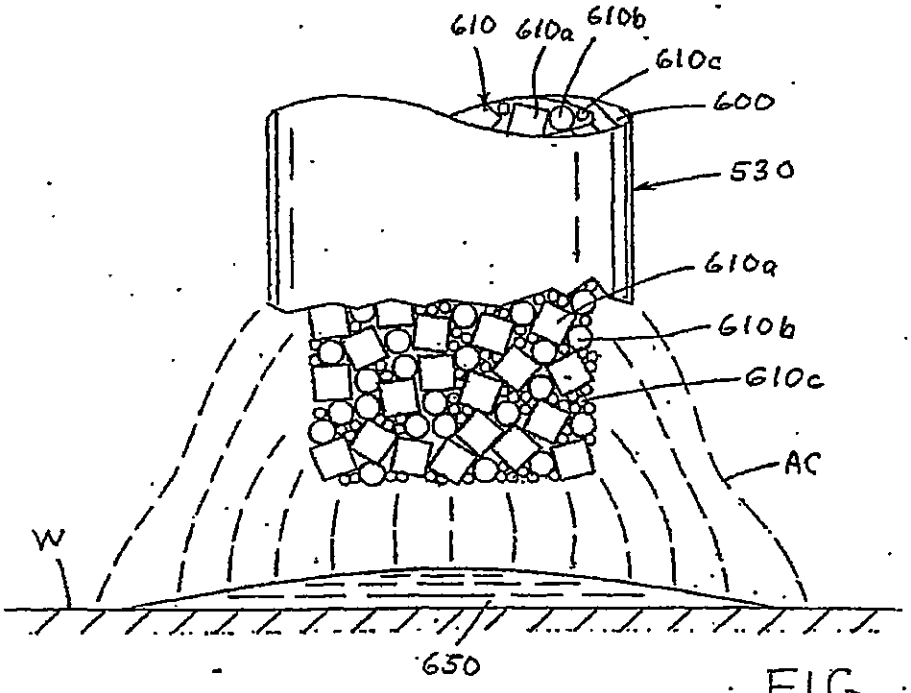
610
610a
610b
610c
600
530
610a
610b
610c
AC
W
650

FIG. 14

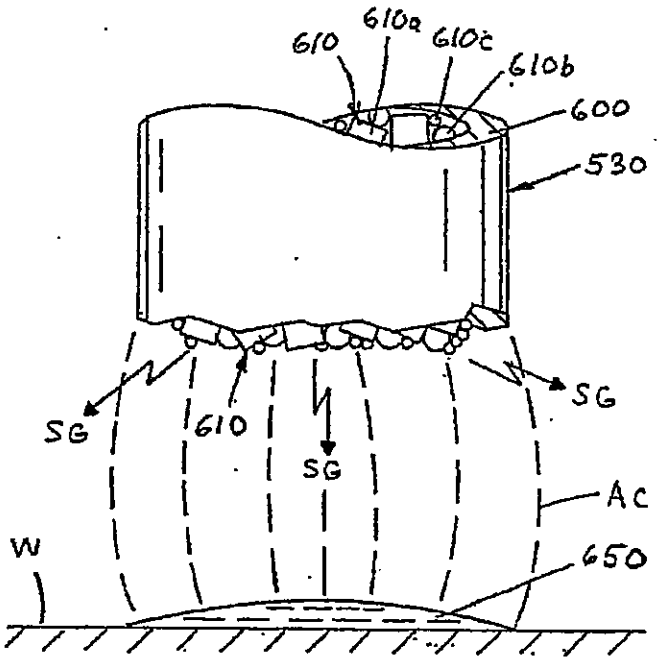
610
610a
610c
610b
600
530
SG
SG
610
SG
Ac
W
650

FIG. 15

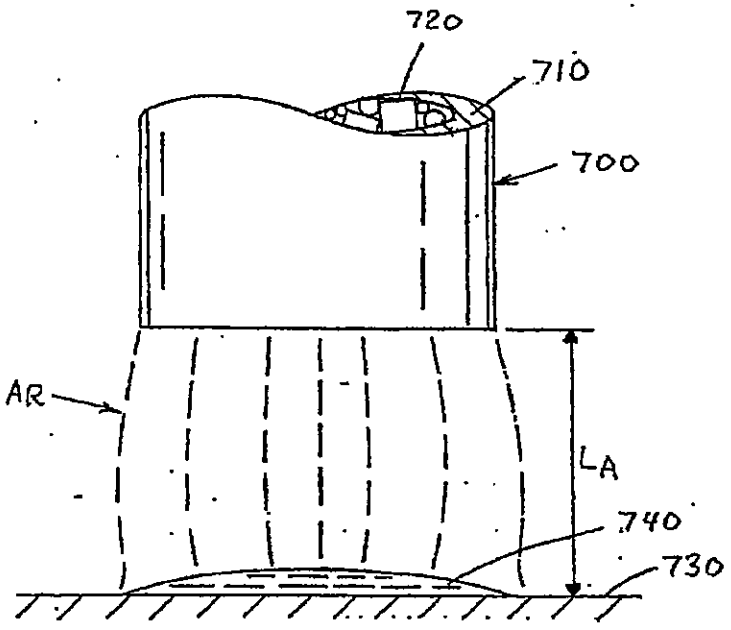
720
710
700
AR
LA
740
730

FIG. 16

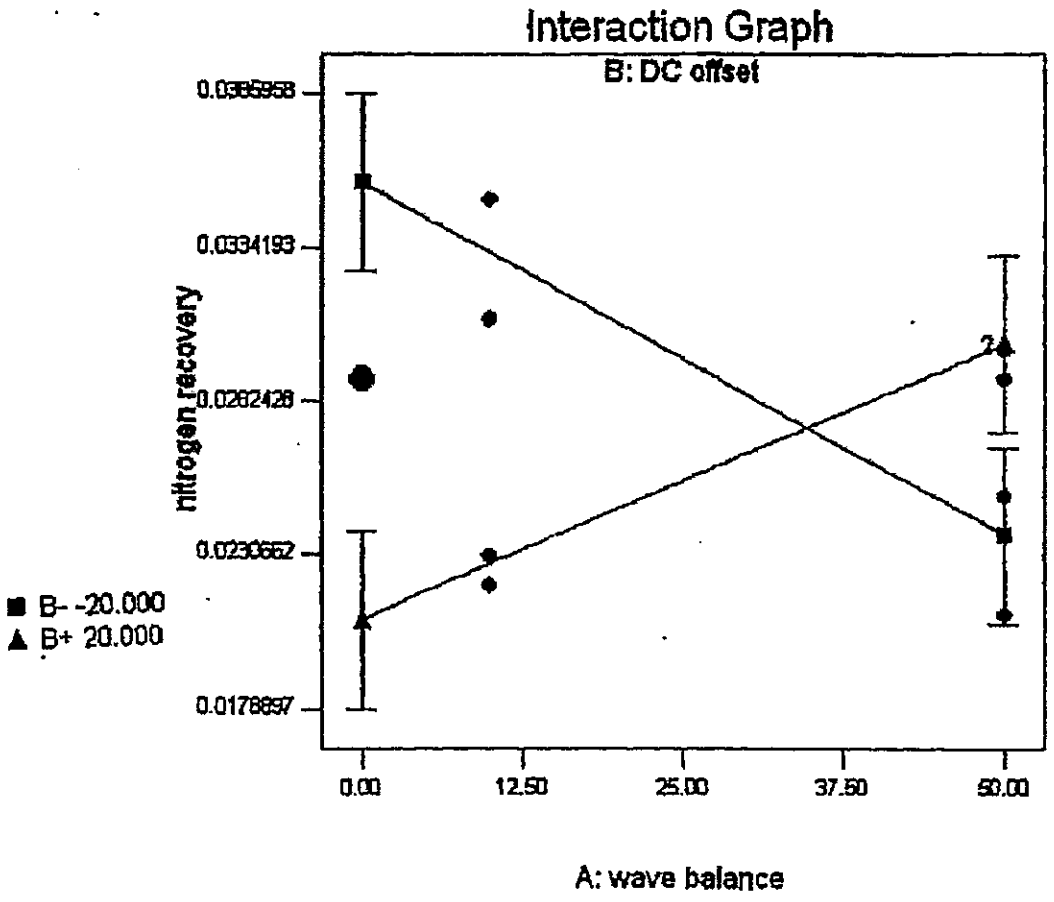
Interaction Graph
B: DC offset
0.0386958
0.0334193
0.0282428
0.0230662
0.0178897
nitrogen recovery
B- -20.000
B+ 20.000
0.00
12.50
25.00
37.50
50.00
A: wave balance

Figure 17

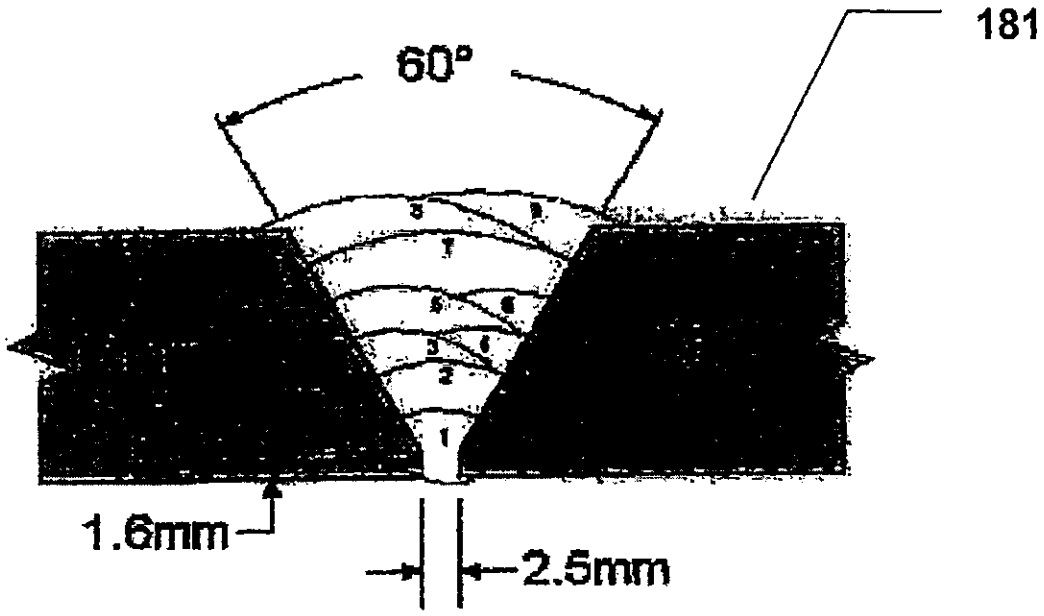

Figure 18