(12) INTERNATIONAL APPLICATION PUBLISHED UNDER THE PATENT COOPERATION TREATY (PCT)

(19) World Intellectual Property Organization
International Bureau

(43) International Publication Date
24 May 2007 (24.05.2007)

PCT

(10) International Publication Number
WO 2007/058875 A1

(51) International Patent Classification:
E04F 15/02 (2006.01)

(21) International Application Number:
PCT/US2006/043604

(22) International Filing Date:
9 November 2006 (09.11.2006)

(25) Filing Language: English

(26) Publication Language: English

(30) Priority Data:
11/271,513 10 November 2005 (10.11.2005) US

(71) Applicant *(for all designated States except US)*: **SICO INCORPORATED** [US/US]; 7525 CAHILL ROAD, Minneapolis, MN 55439-2745 (US).

(72) Inventors; and
(75) Inventors/Applicants *(for US only)*: **DICKEY, Christopher, C.** [US/US]; 1427 CARRIE STREET, West St. Paul, MN 55118 (US). **SCHILLING, Todd, A.** [US/US]; 210 SOUTH SHUMAN STREET, Verona, WI 53593 (US).

(74) Agent: **BRUESS, Steven, C.**; MERCHANT & GOULD P.C., P.O. BOX 2903, Minneapolis, MN 55402-0903 (US).

(81) Designated States *(unless otherwise indicated, for every kind of national protection available)*: AE, AG, AL, AM, AT, AU, AZ, BA, BB, BG, BR, BW, BY, BZ, CA, CH, CN, CO, CR, CU, CZ, DE, DK, DM, DZ, EC, EE, EG, ES, FI, GB, GD, GE, GH, GM, GT, HN, HR, HU, ID, IL, IN, IS, JP, KE, KG, KM, KN, KP, KR, KZ, LA, LC, LK, LR, LS, LT, LU, LV, LY, MA, MD, MG, MK, MN, MW, MX, MY, MZ, NA, NG, NI, NO, NZ, OM, PG, PH, PL, PT, RO, RS, RU, SC, SD, SE, SG, SK, SL, SM, SV, SY, TJ, TM, TN, TR, TT, TZ, UA, UG, US, UZ, VC, VN, ZA, ZM, ZW.

(84) Designated States *(unless otherwise indicated, for every kind of regional protection available)*: ARIPO (BW, GH, GM, KE, LS, MW, MZ, NA, SD, SL, SZ, TZ, UG, ZM, ZW), Eurasian (AM, AZ, BY, KG, KZ, MD, RU, TJ, TM), European (AT, BE, BG, CH, CY, CZ, DE, DK, EE, ES, FI, FR, GB, GR, HU, IE, IS, IT, LT, LU, LV, MC, NL, PL, PT, RO, SE, SI, SK, TR), OAPI (BF, BJ, CF, CG, CI, CM, GA, GN, GQ, GW, ML, MR, NE, SN, TD, TG).

Published:
— *with international search report*
— *before the expiration of the time limit for amending the claims and to be republished in the event of receipt of amendments*

For two-letter codes and other abbreviations, refer to the "Guidance Notes on Codes and Abbreviations" appearing at the beginning of each regular issue of the PCT Gazette.

(54) Title: PORTABLE FLOOR PANEL AND PORTABLE FLOOR SYSTEM COMPRISING A PLURALITY OF SUCH PANELS

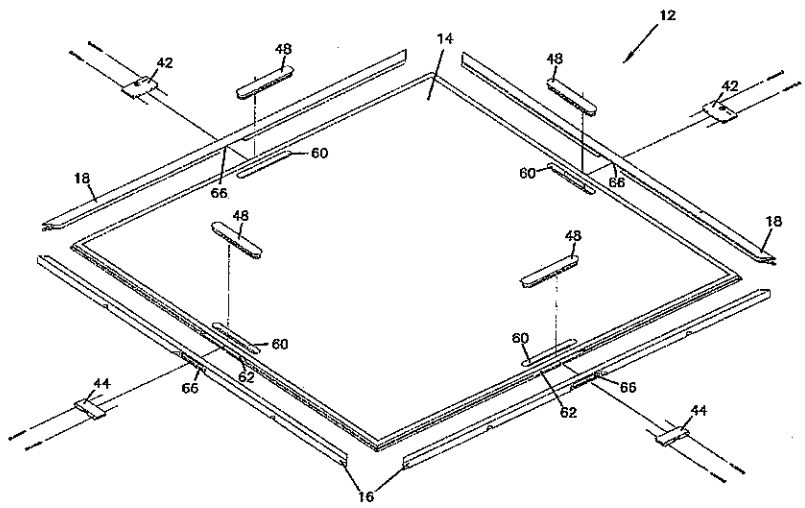

(57) Abstract: A portable floor panel (12) and a portable floor system comprising a plurality of such portable floor panels (12), each panel comprising a planar portion (14) including a top surface (26), a core (20), a bottom surface (22), and complementary edge portions (30, 32). The panel further comprises a panel locking assembly (40) along each edge, the locking assembly having a lock device (42, 44) extending from an edge into the core (20), connectors (46), and an anchor element (48) abutting the lock device (42, 44). The anchor element has a connector receiving portion (52), wherein the connectors engage the lock device (42, 44) and the anchor element (48) to attach the anchor element (48) to the lock device (42, 44). In order to ease its manufacture, insertion and replacement, the anchor element extends through the bottom surface (22).

WO 2007/058875 A1