Negative-resistance-compensated microwave buffer.

This invention relates to microwave buffer circuits, and in particular to monolithic microwave buffer amplifiers having high input impedances.

High-input-impedance microwave buffer amplifiers are particularly useful for coupling cascaded microwave circuits and/or components. When utilized in this manner, such a buffer amplifier couples an output of a first microwave circuit or a microwave component with an input of a second microwave circuit or component to prevent the input from loading down the output.

In monolithic microwave buffer amplifiers, and particularly in the case of field-effect transistor (FET) or bipolar transistor stages, the influence of the transistor input capacitance on the buffer amplifier input impedance becomes increasingly dominant over that of the transistor input resistance as the operating frequency is increased above the 3 dB rolloff frequency f_{3dB}. As used in this patent application, the term 3 dB rolloff frequency means that frequency at which the gain drops more than 3dB below the nominal DC open-loop gain A of the amplifier. An example of this gain dropoff is illustrated in Figure 1. Typically, the input impedance Z_{IN} is equivalent to an input resistance R_i electrically connected in parallel with an input capacitance C_i. As the operating frequency of the buffer amplifier is increased above f_{3dB}, the capacitive reactance $1/2\pi fC_i$ decreases relative to the parallel resistance R_i resulting in a comparable decrease in the magnitude of the input impedance. An example of this decrease is also illustrated in Figure 1. Note from the example that the magnitude of the input impedance Z_{IN} of such a buffer amplifier at the microwave frequency of 1 GHz can be a very low value, such as 2 ohms. This can severely load the output of a circuit or a microwave component coupled to the input. This input characteristic of monolithic microwave buffer amplifiers typically limits their usefulness to situations where the microwave circuits and/or components are operated at frequencies below the 3dB rolloff frequency of the buffer amplifiers.

It is an object of the invention to provide a monolithic microwave buffer amplifier having a positive input impedance which is sufficiently large, even at frequencies above the 3dB rolloff frequency, to enable practical operation above that frequency.

It is another object of the invention to provide a monolithic microwave buffer amplifier having an input impedance in which the dominance of the capacitive component is at least substantially reduced with respect to the resistive component at frequencies above the 3dB rolloff frequency.

In accordance with the invention, a monolithic microwave buffer amplifier includes cascaded first and second stages, each having an input impedance comprising a component which is capacitively reactive above the 3dB rolloff frequency . During operation of the cascaded stages, the capacitively-reactive components cooperate to produce a 180° phase shift between the input current and the input voltage, such that these components appear collectively at the input of the first stage as a negative input resistance of value R^-. The buffer amplifier further includes at its input a positive resistance of magnitude at least equal to the magnitude of the negative input resistance, to effectively cancel the negative resistance and provide an effective positive input resistance of sufficient magnitude to prevent excessive loading of a circuit or component coupled to the input.

Thus, in a buffer amplifier in accordance with the invention the input impedance is increased by substantially decreasing the capacitively reactive component of the input impedance. Further, by choosing a value of positive resistance which substantially cancels the negative input resistance, the resistive component of the input impedance can actually be increased to a value higher than that which would exist in a conventional buffer amplifier.

In a preferred embodiment, the buffer amplifier includes a parallel input resistance of value R, where $1/R = 1/R_{eff} + 1/R^+$. The total input impedance of the buffer amplifier is substantially real and includes as the real part the input resistance R_{IN}, where $1/R_{IN} = 1/R^- + 1/R^+ + 1/R_{eff}$, and where R^+ is equal to and substantially cancels the negative input resistance of value R^-. Thus, the resistance R_{eff} comprises the effective input impedance of the buffer amplifier.

Other embodiments according to the invention are described in the remaining claims.

Embodiments of the invention will not be described by way of example, with reference to the accompanying drawings, wherein:

Figure 1 shows a representative graph illustrating the current gain vs. frequency characteristic, and the input impedance vs. frequency characteristic, of a typical monolithic microwave buffer amplifier.

Figures 2 A and 2B show circuit diagrams of first and second embodiments of a monolithic microwave buffer amplifier in accordance with the invention, respectively.

Figure 3 shows a representative graph illustrating the total input resistance vs. frequency characteristic, and the negative input resistance vs. frequency characteristic, of a monolithic microwave buffer amplifier in accordance with the invention.

Figures 4 A and 4B show circuit diagrams of monolithic third and fourth embodiments of a monolithic microwave buffer amplifier in accordance with the invention, respectively.

Figure 2A shows a first embodiment of a buffer amplifier in accordance with the invention, which includes two cascaded bipolar-transistor stages. In the first stage, transistor Q_1 is electrically connected in an emitter-follower configuration with resistor R_1, which is electrically connected to the emitter. In the second stage, transistor Q_2 is electrically connected in a common-emitter configuration. The base of transistor Q_1 is electrically connected to an input IN of the buffer amplifier, and the collector of transistor Q_2 is electrically connected to an output OUT of the buffer amplifier. The buffer amplifier also includes terminals for connection to supply voltages V^+ and V^-, one of which is typically ground potential.

The combined first and second stages have an input capacitance which, at frequencies above f_{3dB}, is approximated by:

$$C_{IN} = \frac{C_1}{g_{m1}R_1} + \frac{C_2}{\beta_1} \qquad (1)$$

where g_{m1} is the transconductance of the first stage, C_1 and C_2 are the base-to-emitter capacitances of the transistors Q_1 and Q_2, respectively, and β_1 is the current-gain factor of transistor Q_1.

The input capacitance C_{IN} is significantly smaller than the parallel combination of the capacitances C_1 and C_2, because β_1 and $g_{m1}R_1$ are each typically much greater than 1. Much of the capacitive influence on the buffer amplifier input impedance is converted to a negative input resistance which, at frequencies above the 3 dB rolloff frequency, is approximated by:

$$R^- = -\frac{g_{m1}}{(2\pi f)^2 C_1 C_2} \qquad (2)$$

where f is the operating frequency.

Because the value of R^- is negative, the buffer amplifier would be unstable, if not compensated. However, by electrically connecting in parallel with the input of the first stage a resistance R, having a value such that:

$$\frac{1}{R} = \frac{1}{R_{eff}} + \frac{1}{R^+} \qquad (3)$$

where the magnitude of R^+ is made equal to the magnitude of R^-, the input resistance of the buffer amplifier will be converted to the real, positive resistance of value R_{eff}.

The total input resistance R_{IN} is equivalent to a parallel combination of the three resistances R^+, R^-, and R_{eff} where:

$$\frac{1}{R_{IN}} = \frac{1}{R_{eff}} + \frac{1}{R^+} + \frac{1}{R^-} \qquad (4)$$

Because $R^+ = -R^-$, these two values cancel each other and the above equation reduces to:

$$R_{IN} = R_{eff} \qquad (5)$$

As an example, if R^- is equal to -270 ohms at a predetermined operating frequency (e.g. 1 GHz), and an effective input resistance $R_{IN} = R_{eff} = +230$ ohms is desired at this frequency, the value of the resistance R^+ would be equal to +270 ohms and the value of parallel resistance R would be equal to approximately +125 ohms, as determined from equation 3.

Figure 2B shows a second embodiment of a buffer amplifier in accordance with the invention. This embodiment is similar to the first, but the resistance R is electrically connected in series with the input of the first stage. In this case:

$$R = R_{eff} + R^+ \qquad (6)$$

and the value of series resistance R is made equal to +500 ohms. Note that, when R is placed in series rather than parallel, a larger value of R is needed to achieve the same positive input resistance R_{IN}.

Figure 3 graphically illustrates, as a function of frequency, the negative input resistance R^- and the effective input resistance $R_{IN} = R_{eff}$ of the buffer amplifier illustrated in Figure 2A for the value of R calculated above. Note that, in comparison to Figure 1, the effective input resistance R_{IN} at 10^7 GHz is approximately tripled. At frequencies

above 10^8 Hz the effective input resistance remains positive and actually increases until it peaks near the designed 1 GHz operating frequency of the buffer amplifier, rather than dropping to the approximately 2 ohm magnitude at 1 GHz, as is illustrated in Figure 1. For the Figure 2B embodiment having the same value of R, the input resistance and negative input resistance curves would be similar, but not identical to those shown in Figure 3.

Figure 4A shows a third embodiment of a buffer amplifier in accordance with the invention, which includes a first bipolar-transistor stage cascaded with a second capacitive stage. The first stage is substantially identical to the first stage of the first embodiment. The second stage, however, merely includes a capacitance of value C'_2 that is electrically connected to the output of the first stage and to the output OUT of the buffer amplifier.

Similarly to the first embodiment, the combined first and second stages of the third embodiment have a negative, input resistance which, at frequencies above the 3dB rolloff frequency, is approximated by:

$$R^- = - \frac{g_{m1}}{(2\pi f)^2 C_1 C'_2} \qquad (7)$$

and the input capacitance is approximated by:

$$C_{IN} = \frac{C_1}{g_{m1} R_1} + \frac{C'_2}{\beta_1} \qquad (8)$$

where g_{m1} is the transconductance of the first stage and C_1 is the base-to-emitter capacitance of the transistor Q_1. The value of the resistance R is determined by using equation 3, as for the first embodiment.

Figure 4B shows a fourth embodiment of a buffer amplifier in accordance with the invention. This embodiment is similar to the third, but with the resistance R electrically connected in series with the input of the first stage, as in the second embodiment. Similarly, in this case equation 6 is utilized to determine the value of the resistance R.

In any of the embodiments, the resistance R may be constructed by utilizing either passive or active components. For example, it may be constructed from one or more passive resistors or from one or more active components, such as diodes or transistors having forward-conducting resistive characteristics that vary with temperature and/or bias conditions similarly to the resistive characteristics of the first and/or second stages.

The capacitance C'_2 in the third and fourth embodiments may also be constructed from either passive or active components. As an example of an active-component construction, C'_2 could be the input capacitance of a subsequent stage.

Other alternative embodiments are also possible within the scope of the invention. For example, resistance R_1 may be constructed from one or more passive and/or active components. As an example of an active component, resistance R_1 could be a forward-biased diode or transistor junction. Additionally, components which do not have significant impedances at the operating frequencies of the buffer amplifier, such as a DC-blocking capacitor in series with resistance R, may be included in the buffer amplifier. As another alternative, the buffer amplifier may be coupled to the supply voltages via active and/or passive components.

The invention is not resticted to complementations using bipolar transistors, as FETs can also be used.

CLAIMS:



1. A monolithic microwave buffer amplifier for operating at frequencies above a predetermined 3dB rolloff frequency, said buffer amplifier comprising cascaded first and second stages, each having an input impedance including a capacitively-reactive component, said capacitively-reactive components, during operation of the first and second stages, cooperating to produce a 180° phase shift such that said reactive components appear collectively at the input of the first stage as a negative input resistance, said buffer amplifier further including at its input a positive resistance having a magnitude which at least cancels said negative input resistance.

2. A monolithic microwave buffer amplifier as in claim 1 where the positive resistance is electrically connected in parallel with the input of the first stage.

3. A monolithic microwave buffer amplifier as in claim 1 where the positive resistance is electrically connected in series with the input of the first stage.

4. A monolithic microwave buffer amplifier as in claim 3 where the magnitude of the positive resistance is substantially greater than the magnitude of the negative input resistance.

5. A monolithic microwave buffer amplifier as in claim 2 where the negative input resistance has a value R, and the positive resistance has a value R, where $1/R = 1/R_{eff} + 1/R^{+}$, the total input resistance of the buffer amplifier being substantially equal to R_{IN}, where $1/R_{IN} = 1/R_{eff} + 1/R^{+} + 1/R^{-}$, where R^{+} is approximatley equal to and substantially cancels the negative input resistance of value R^{-}, and where R_{eff} comprises the effective input resistance of the buffer amplifier.

6. A monolithic microwave buffer amplifier as in claim 3 or 4 where the negative input resistance has a value R- and the positive resistance has a value R, where $R = R_{eff} + R^{+}$, the total input resistance of the buffer amplifier being substantially equal to R_{IN}, where $R_{IN} = R_{eff} + R^{+} + R^{-}$, where R^{+} is approximatley equal to and substantially cancels the negative input resistance of value R^{-}, and where R_{eff} comprises the effective input resistance of the buffer amplifier.

7. A monolithic microwave buffer amplifier as in claim 1, 2, 3, 4, 5 or 6 where the input impedance of the buffer amplifier is substantially equal to the input resistance of said buffer amplifier.



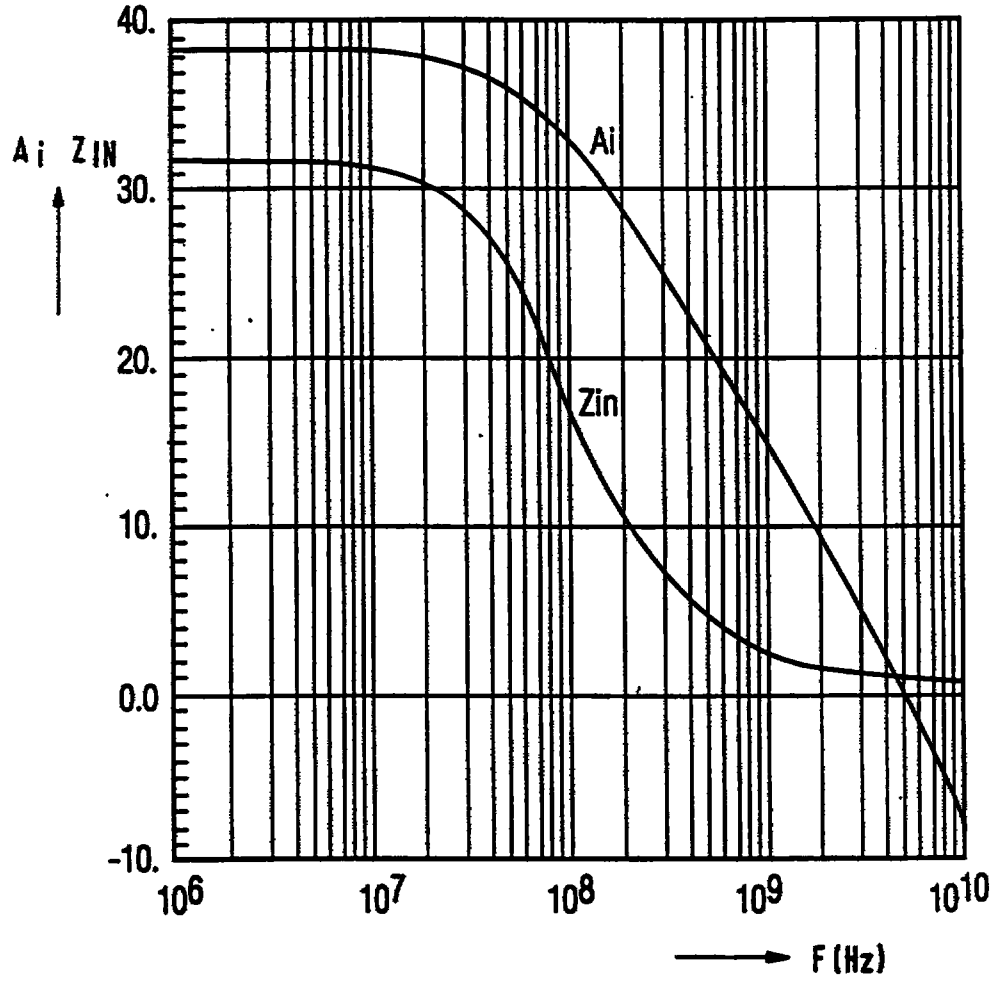

FIG. 1

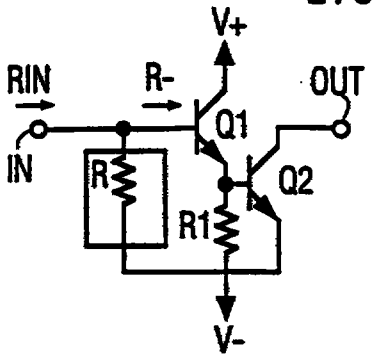

FIG.2A

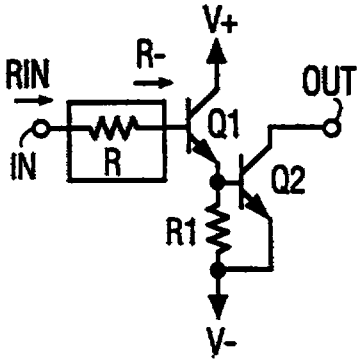

FIG.2B

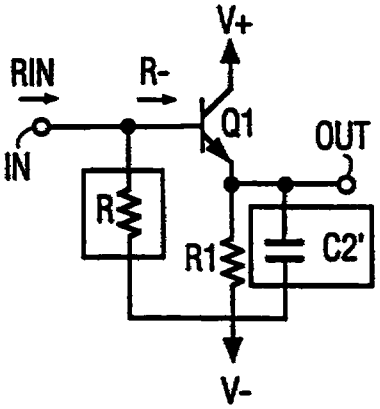

FIG.4A

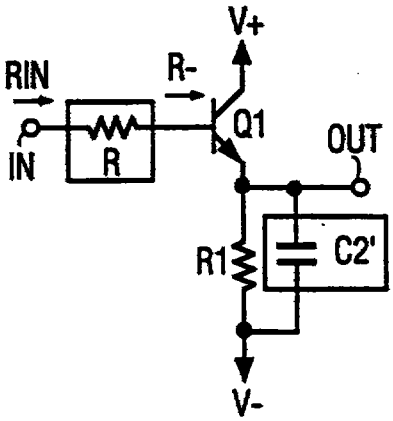

FIG.4B

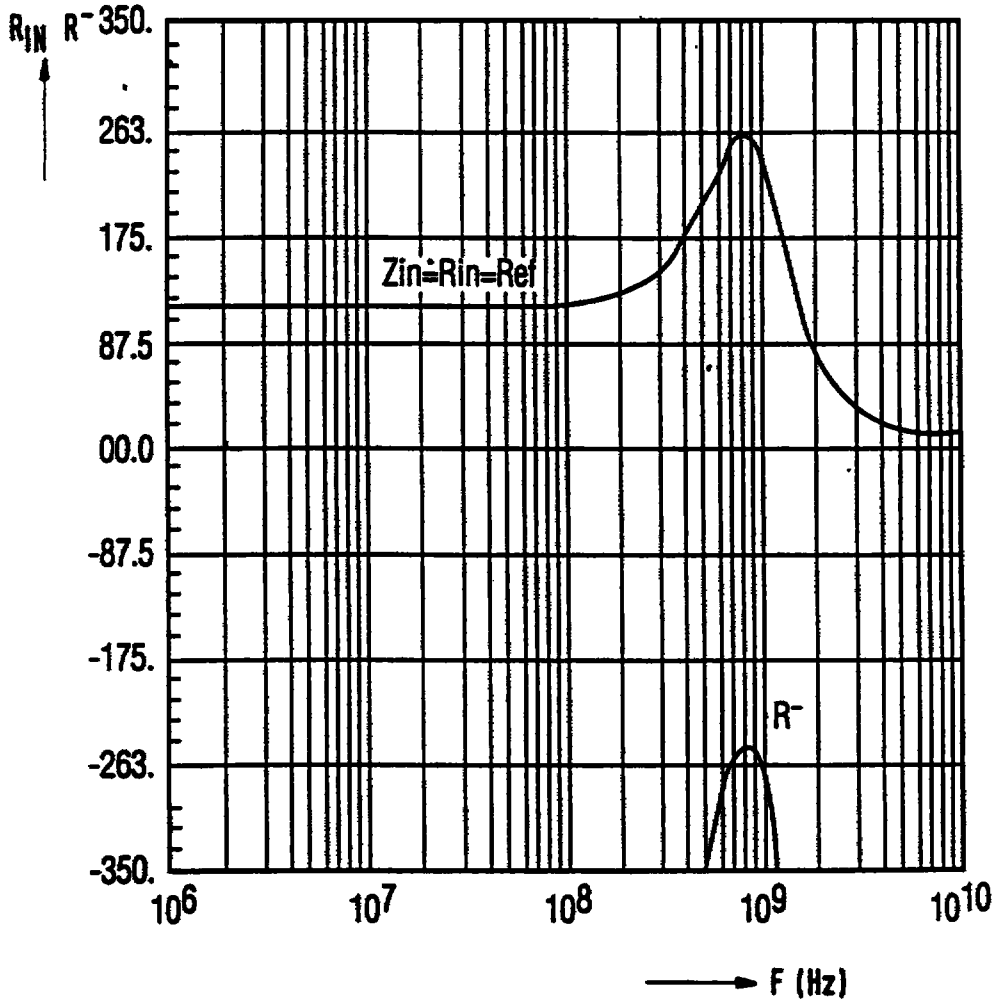
R_{IN}
R⁻
350.
263.
175.
87.5
00.0
-87.5
-175.
-263.
-350.
Zin=Rin=Ref
R⁻
10^6
10^7
10^8
10^9
10^{10}
F (Hz)

FIG.3

PCT WORLD INTELLECTUAL PROPERTY ORGANIZATION
International Bureau

INTERNATIONAL APPLICATION PUBLISHED UNDER THE PATENT COOPERATION TREATY (PCT)

(51) International Patent Classification 6 : H03F 3/19

A2

(11) International Publication Number: WO 95/30272

(43) International Publication Date: 9 November 1995 (09.11.95)

(21) International Application Number: PCT/IB95/00258

(22) International Filing Date: 12 April 1995 (12.04.95)

(30) Priority Data:
08/230,351 20 April 1994 (20.04.94) US

(71) Applicant: PHILIPS ELECTRONICS N.V. [NL/NL]; Groenewoudseweg 1, NL-5621 BA Eindhoven (NL).

(71) Applicant *(for SE only)*: PHILIPS NORDEN AB [SE/SE]; Kottbygatan 5, Kista, S-164 85 Stockholm (SE).

(72) Inventors: WONG, Stephen; 117 Walworth Avenue, Scarsdale, NY 10583 (US). GARCIA, Jose; 6502 Durham Avenue, North Bergen, NJ 07047 (US).

(74) Agent: SCHOONHEIJM, Harry, Barend; Internationaal Octrooibureau B.V., P.O. Box 220, NL-5600 AE Eindhoven (NL).

(81) Designated States: CN, JP, KR, SG, European patent (AT, BE, CH, DE, DK, ES, FR, GB, GR, IE, IT, LU, MC, NL, PT, SE).

Published
Without international search report and to be republished upon receipt of that report.

SG 9611732-0

RTMP.

(54) Title: NEGATIVE-RESISTANCE-COMPENSATED MICROWAVE BUFFER

(57) Abstract

A monolithic microwave buffer amplifier is adapted to increase its input impedance at microwave frequencies. Capacitive reactances in first and second stages of the buffer amplifier appear collectively at the input of the first stage as a negative resistance. Compensating positive resistance is electrically connected to the input of the first stage to cancel the negative resistance and provide a sufficiently high resistive input impedance.

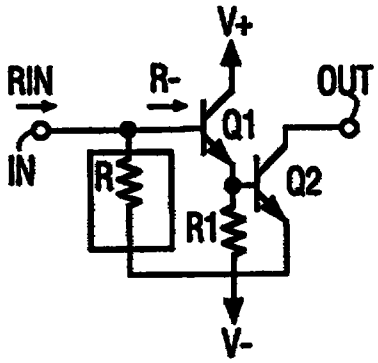

FOR THE PURPOSES OF INFORMATION ONLY

Codes used to identify States party to the PCT on the front pages of pamphlets publishing international applications under the PCT.

AT	Austria	GB	United Kingdom	MR	Mauritania
AU	Australia	GE	Georgia	MW	Malawi
BB	Barbados	GN	Guinea	NE	Niger
BE	Belgium	GR	Greece	NL	Netherlands
BF	Burkina Faso	HU	Hungary	NO	Norway
BG	Bulgaria	IE	Ireland	NZ	New Zealand
BJ	Benin	IT	Italy	PL	Poland
BR	Brazil	JP	Japan	PT	Portugal
BY	Belarus	KE	Kenya	RO	Romania
CA	Canada	KG	Kyrgystan	RU	Russian Federation
CF	Central African Republic	KP	Democratic People's Republic of Korea	SD	Sudan
CG	Congo			SE	Sweden
CH	Switzerland	KR	Republic of Korea	SI	Slovenia
CI	Côte d'Ivoire	KZ	Kazakhstan	SK	Slovakia
CM	Cameroon	LI	Liechtenstein	SN	Senegal
CN	China	LK	Sri Lanka	TD	Chad
CS	Czechoslovakia	LU	Luxembourg	TG	Togo
CZ	Czech Republic	LV	Latvia	TJ	Tajikistan
DE	Germany	MC	Monaco	TT	Trinidad and Tobago
DK	Denmark	MD	Republic of Moldova	UA	Ukraine
ES	Spain	MG	Madagascar	US	United States of America
FI	Finland	ML	Mali	UZ	Uzbekistan
FR	France	MN	Mongolia	VN	Viet Nam
GA	Gabon				

96 11 732 - 0