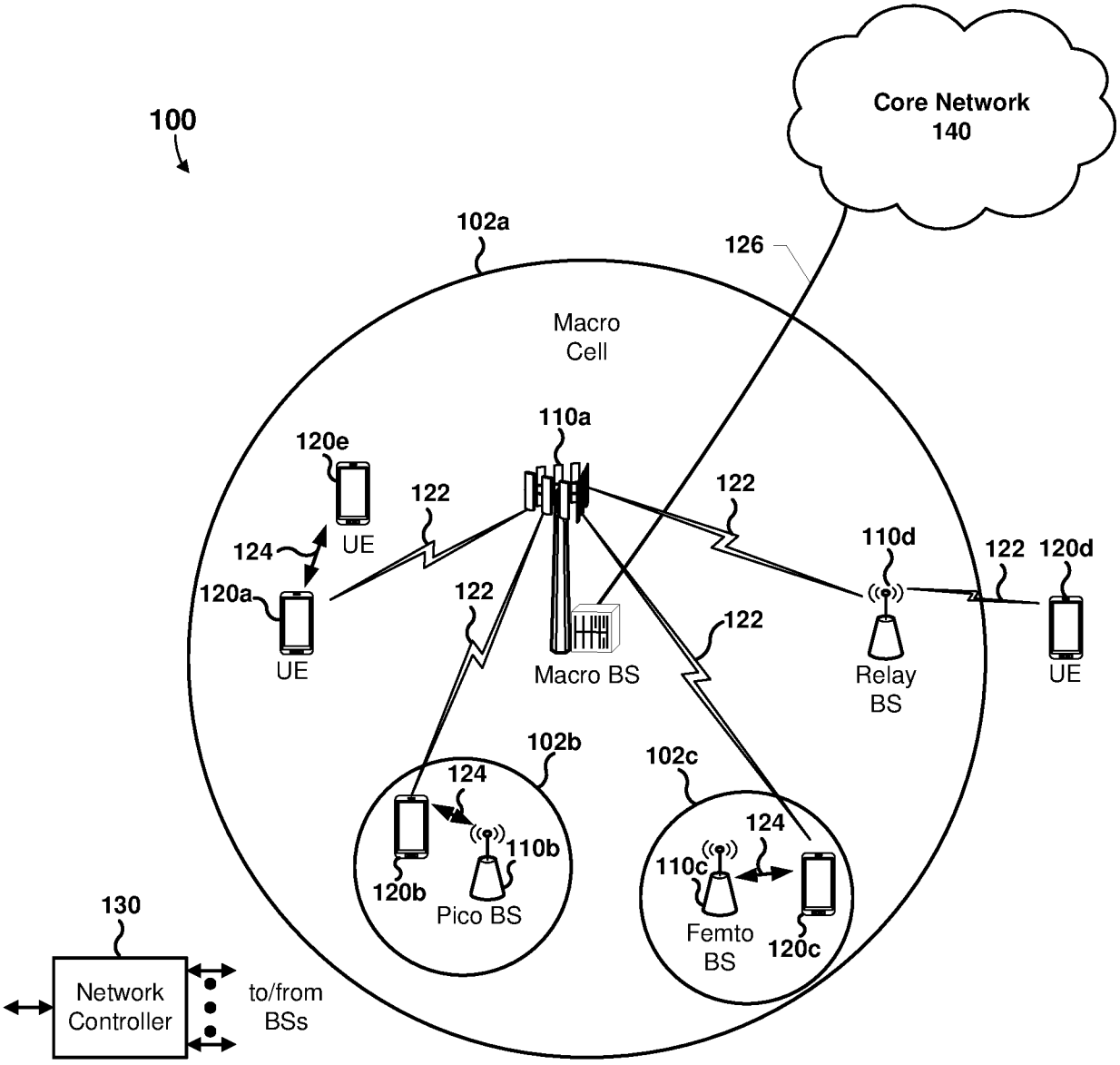
100
Core Network
140
126
102a
Macro
Cell
110a
120e
UE
122
124
120a
UE
122
122
110d
122
120d
Relay
BS
UE
Macro BS
122
102b
102c
124
110b
120b
Pico BS
124
110c
Femto
BS
120c
130
Network
Controller
to/from
BSs

FIG. 1

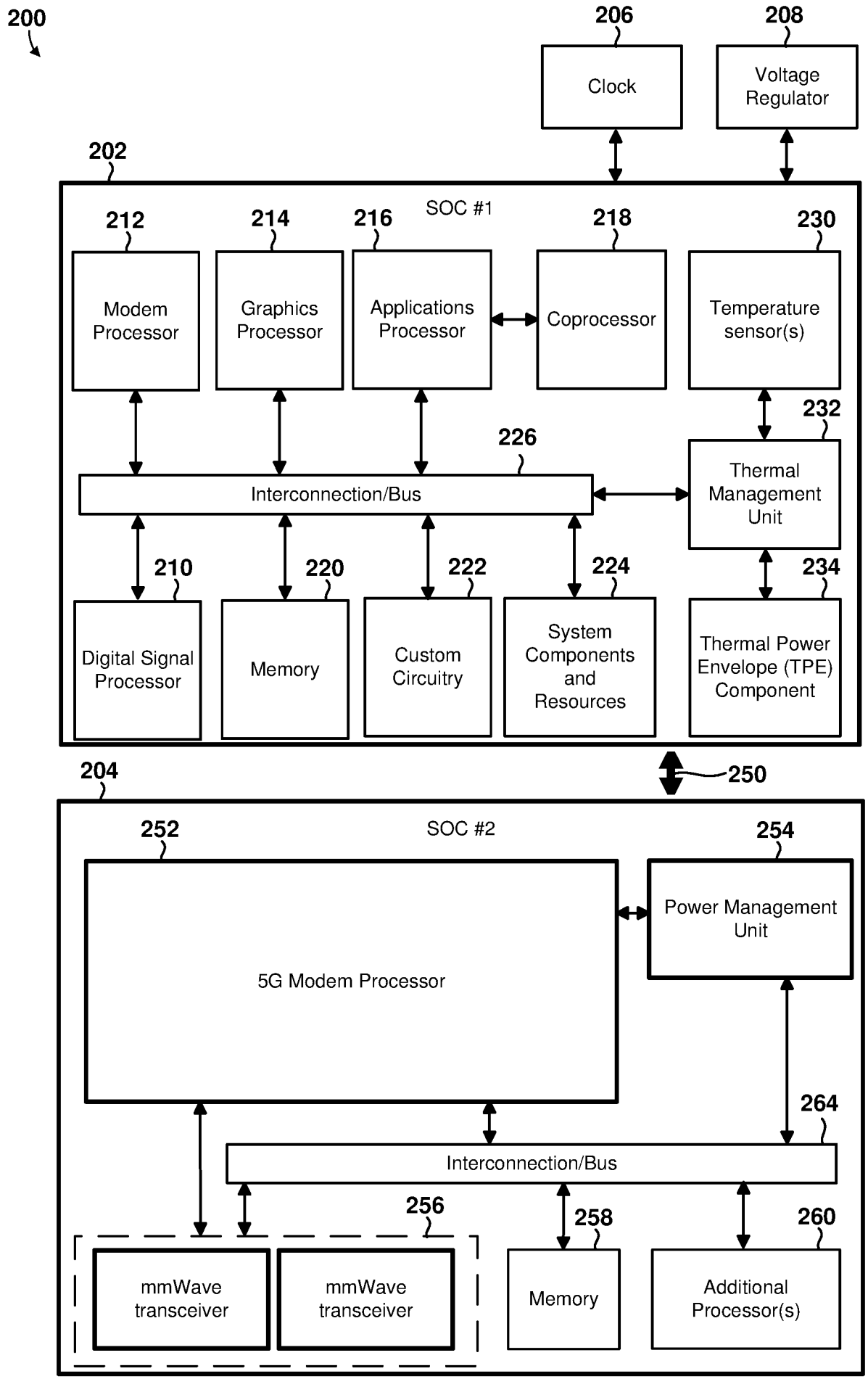
200
206
Clock
208
Voltage Regulator
202
SOC #1
212
Modem Processor
214
Graphics Processor
216
Applications Processor
218
Coprocessor
230
Temperature sensor(s)
232
226
Interconnection/Bus
Thermal Management Unit
210
Digital Signal Processor
220
Memory
222
Custom Circuitry
224
System Components and Resources
234
Thermal Power Envelope (TPE) Component
204
250
252
SOC #2
254
5G Modem Processor
Power Management Unit
264
Interconnection/Bus
256
mmWave transceiver
mmWave transceiver
258
Memory
260
Additional Processor(s)

FIG. 2

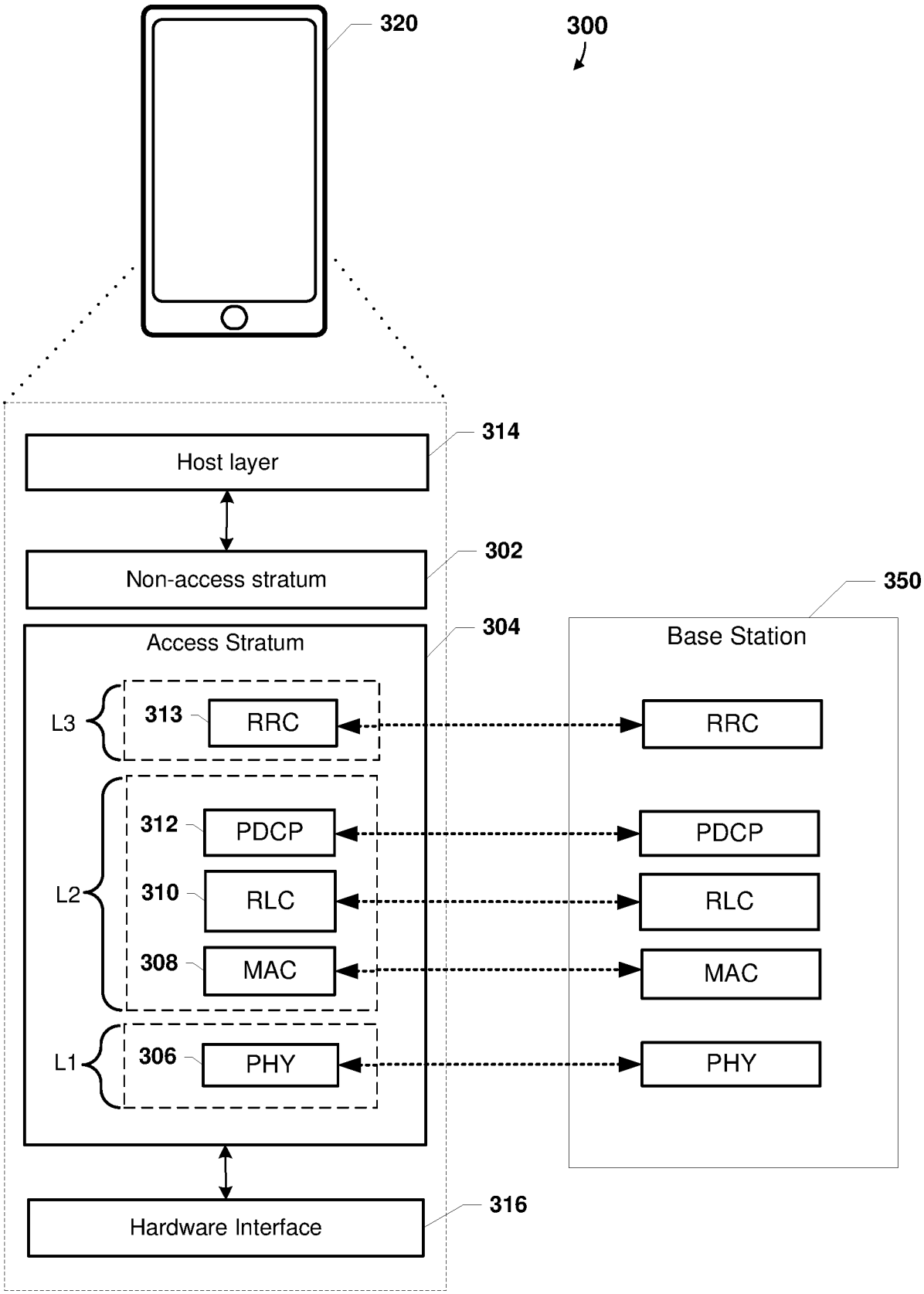
320
300
314
Host layer
302
Non-access stratum
304
Access Stratum
L3
313
RRC
L2
312
PDCP
310
RLC
308
MAC
L1
306
PHY
316
Hardware Interface
350
Base Station
RRC
PDCP
RLC
MAC
PHY

FIG. 3

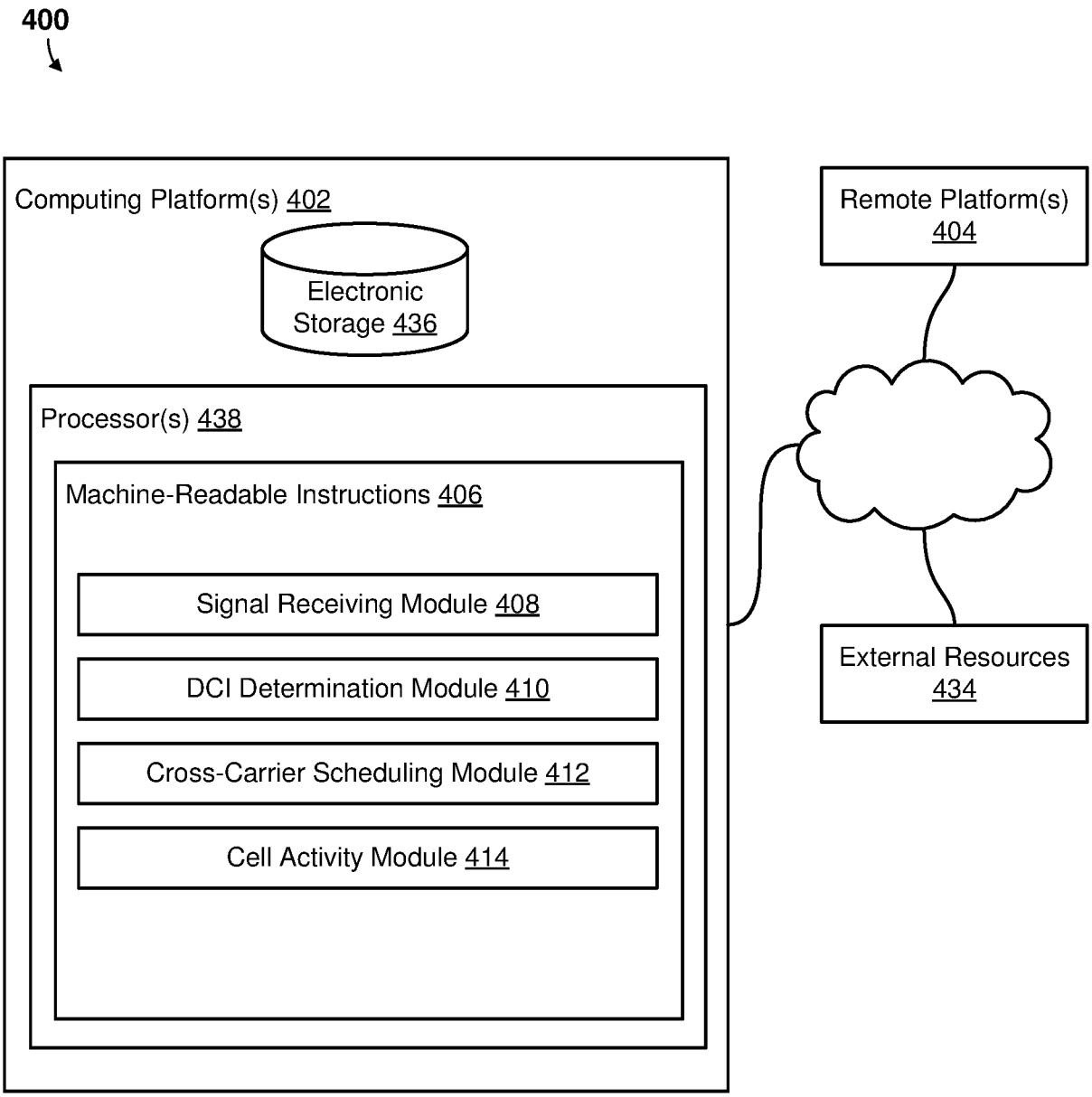
400
Computing Platform(s) 402
Electronic Storage 436
Processor(s) 438
Machine-Readable Instructions 406
Signal Receiving Module 408
DCI Determination Module 410
Cross-Carrier Scheduling Module 412
Cell Activity Module 414
Remote Platform(s) 404
External Resources 434

FIG. 4A

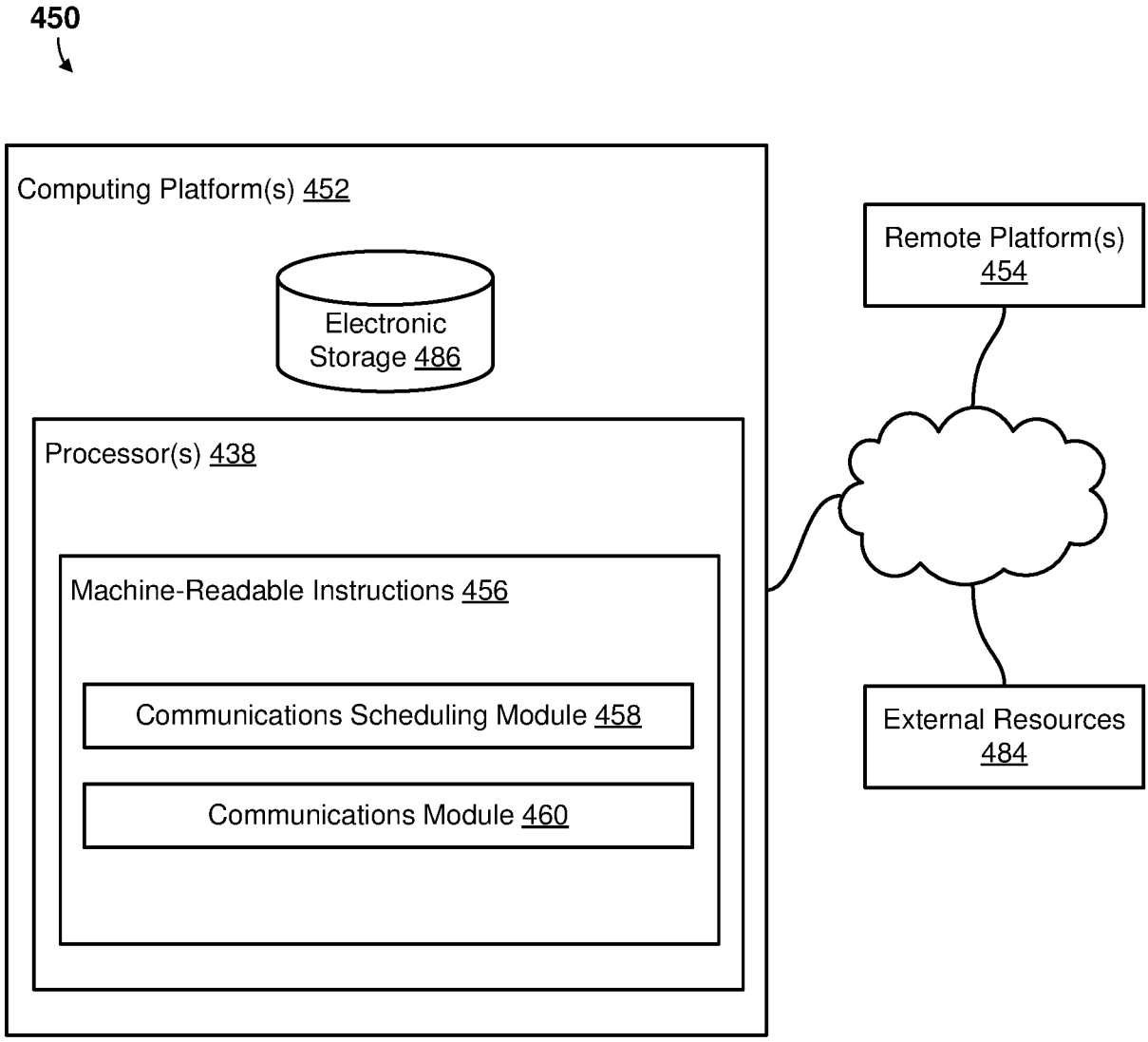
450
Computing Platform(s) 452
Electronic Storage 486
Processor(s) 438
Machine-Readable Instructions 456
Communications Scheduling Module 458
Communications Module 460
Remote Platform(s) 454
External Resources 484

FIG. 4B

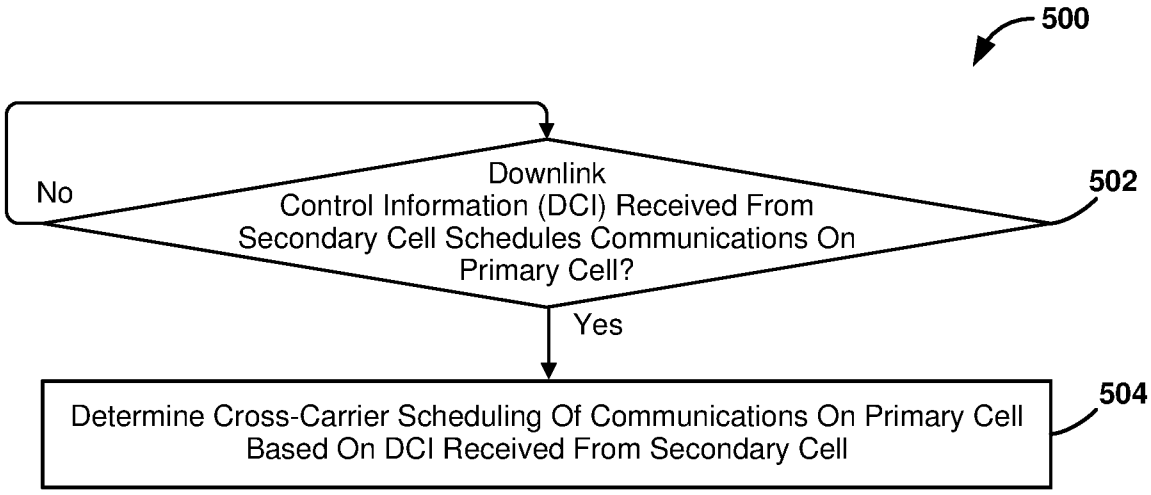
500
Downlink Control Information (DCI) Received From Secondary Cell Schedules Communications On Primary Cell?
502
No
Yes
Determine Cross-Carrier Scheduling Of Communications On Primary Cell Based On DCI Received From Secondary Cell
504

FIG. 5

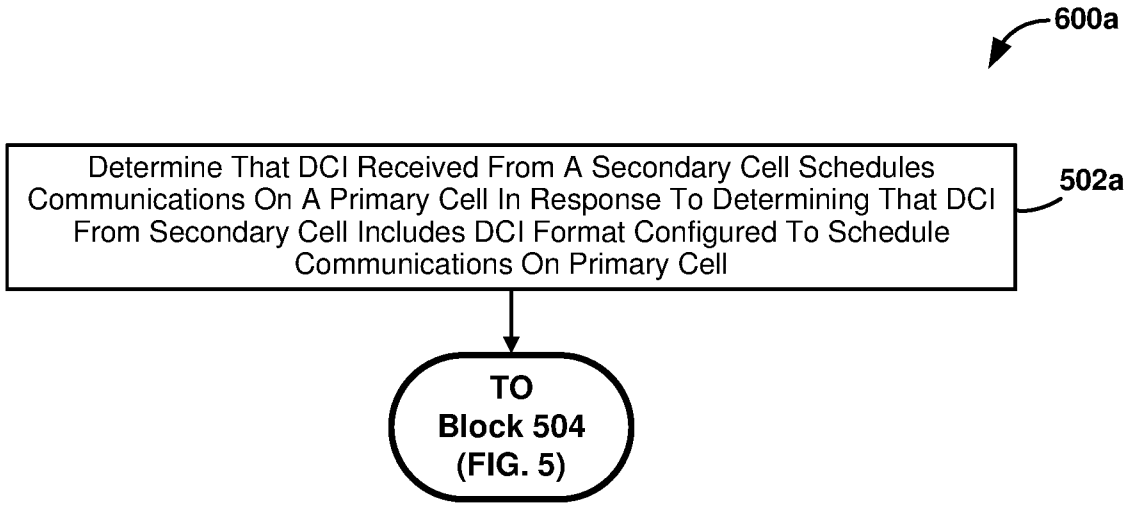
600a
Determine That DCI Received From A Secondary Cell Schedules Communications On A Primary Cell In Response To Determining That DCI From Secondary Cell Includes DCI Format Configured To Schedule Communications On Primary Cell
502a
TO Block 504 (FIG. 5)

FIG. 6A

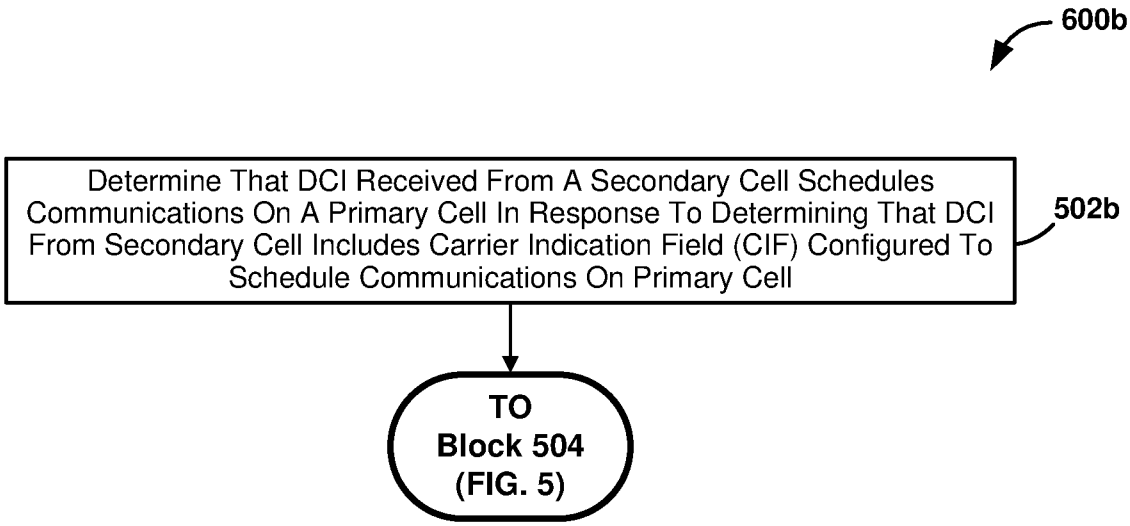
600b
Determine That DCI Received From A Secondary Cell Schedules Communications On A Primary Cell In Response To Determining That DCI From Secondary Cell Includes Carrier Indication Field (CIF) Configured To Schedule Communications On Primary Cell
502b
TO Block 504 (FIG. 5)

FIG. 6B

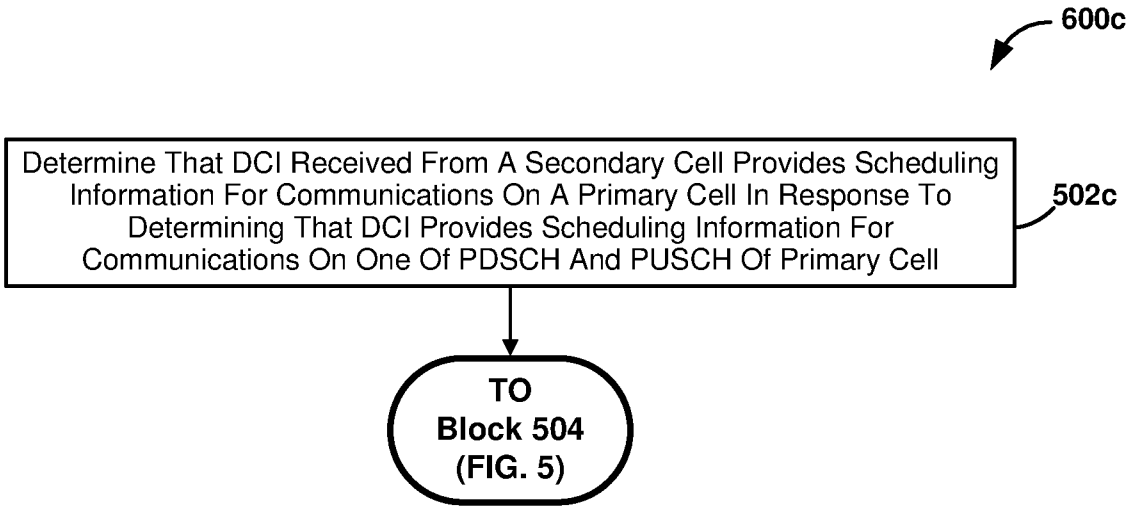
600c
Determine That DCI Received From A Secondary Cell Provides Scheduling Information For Communications On A Primary Cell In Response To Determining That DCI Provides Scheduling Information For Communications On One Of PDSCH And PUSCH Of Primary Cell
502c
TO Block 504 (FIG. 5)

FIG. 6C

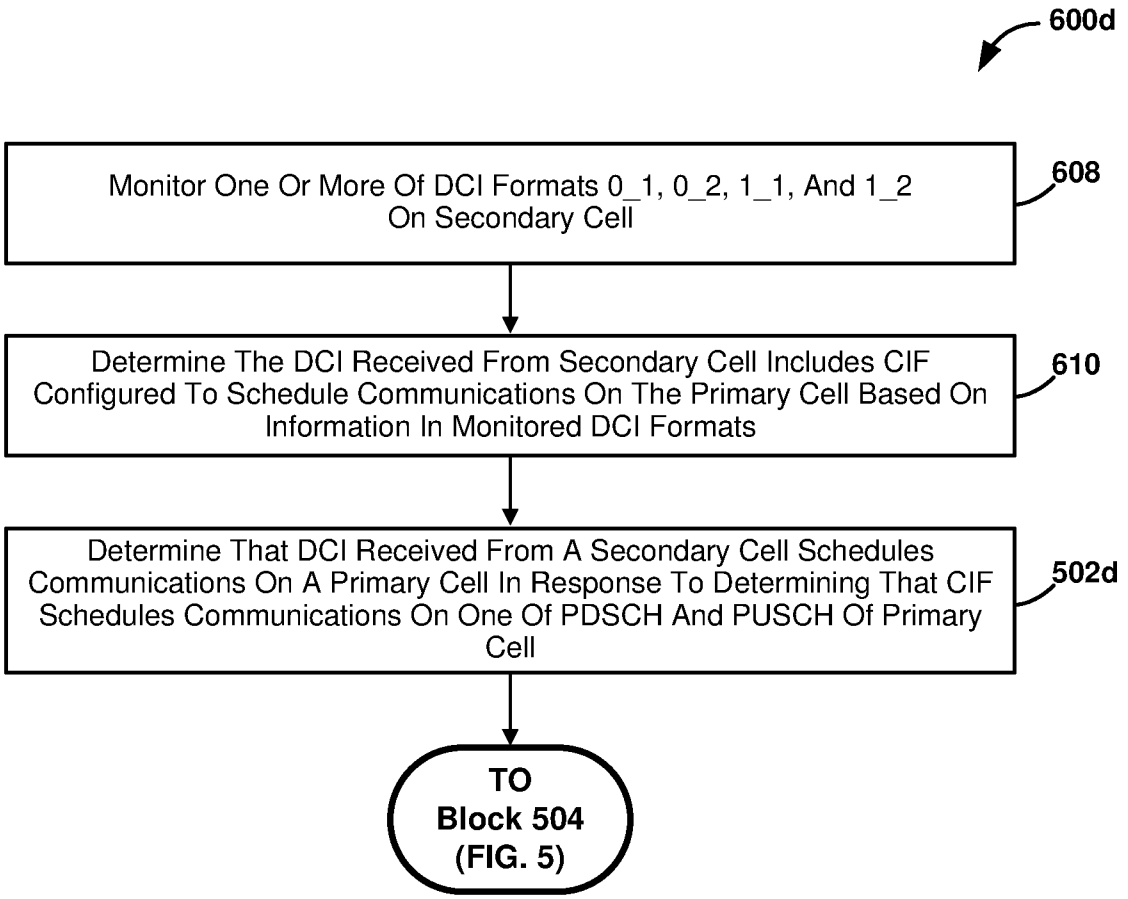
600d
Monitor One Or More Of DCI Formats 0_1, 0_2, 1_1, And 1_2 On Secondary Cell
608
Determine The DCI Received From Secondary Cell Includes CIF Configured To Schedule Communications On The Primary Cell Based On Information In Monitored DCI Formats
610
Determine That DCI Received From A Secondary Cell Schedules Communications On A Primary Cell In Response To Determining That CIF Schedules Communications On One Of PDSCH And PUSCH Of Primary Cell
502d
TO Block 504 (FIG. 5)

FIG. 6D

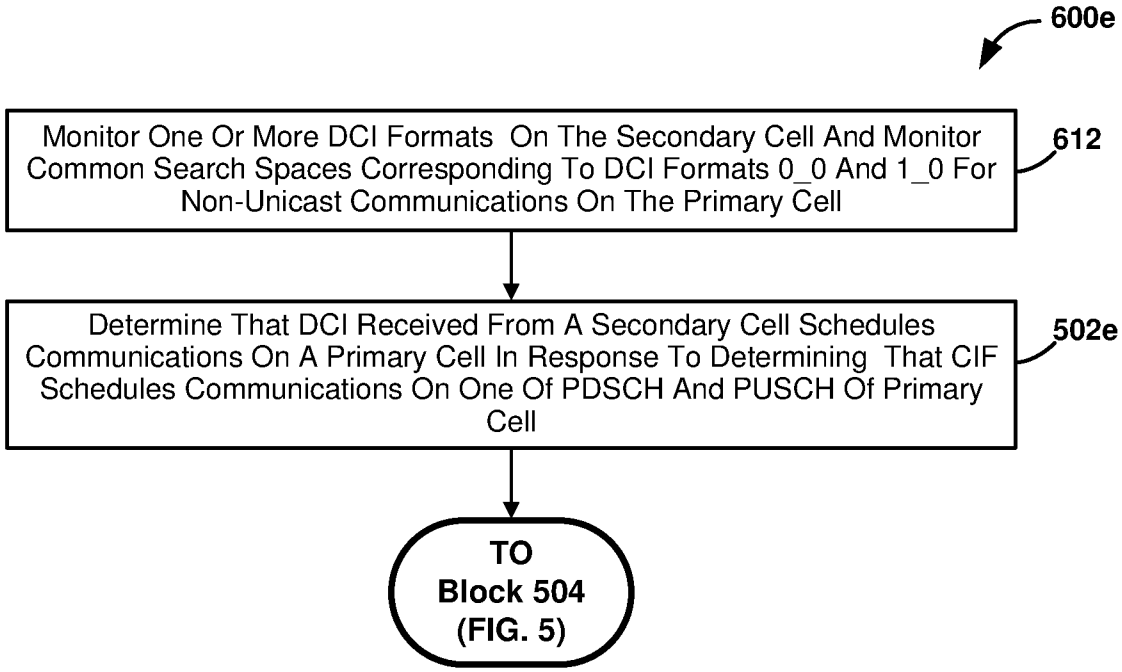
600e
Monitor One Or More DCI Formats On The Secondary Cell And Monitor Common Search Spaces Corresponding To DCI Formats 0_0 And 1_0 For Non-Unicast Communications On The Primary Cell
612
Determine That DCI Received From A Secondary Cell Schedules Communications On A Primary Cell In Response To Determining That CIF Schedules Communications On One Of PDSCH And PUSCH Of Primary Cell
502e
TO Block 504 (FIG. 5)

FIG. 6E

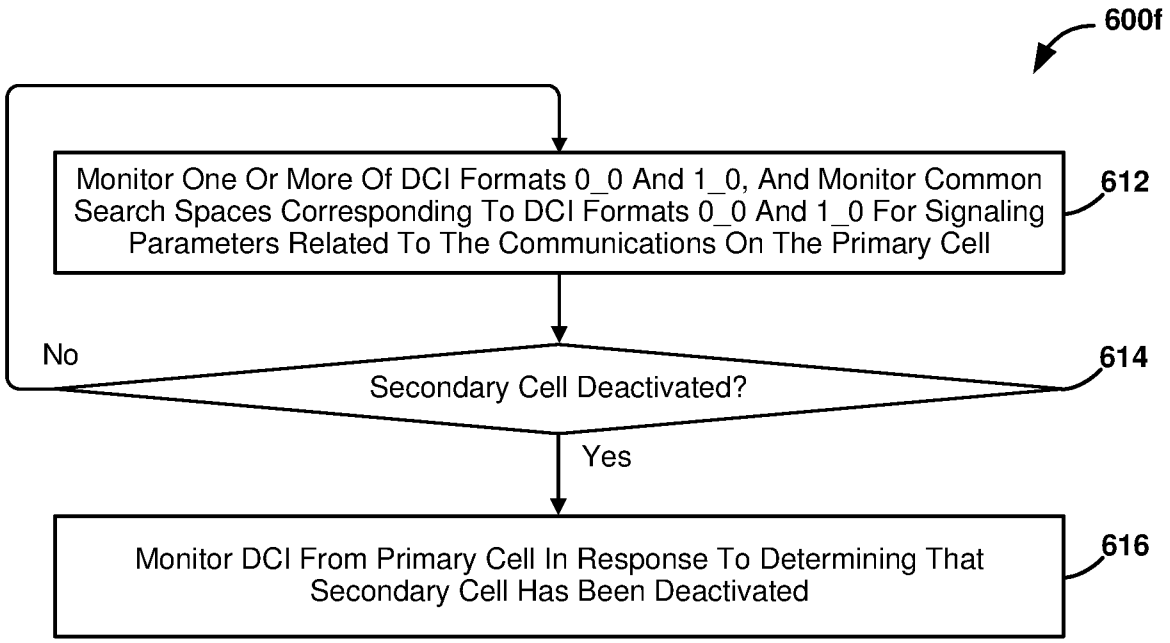
600f
Monitor One Or More Of DCI Formats 0_0 And 1_0, And Monitor Common Search Spaces Corresponding To DCI Formats 0_0 And 1_0 For Signaling Parameters Related To The Communications On The Primary Cell
612
No
Secondary Cell Deactivated?
614
Yes
Monitor DCI From Primary Cell In Response To Determining That Secondary Cell Has Been Deactivated
616

FIG. 6F

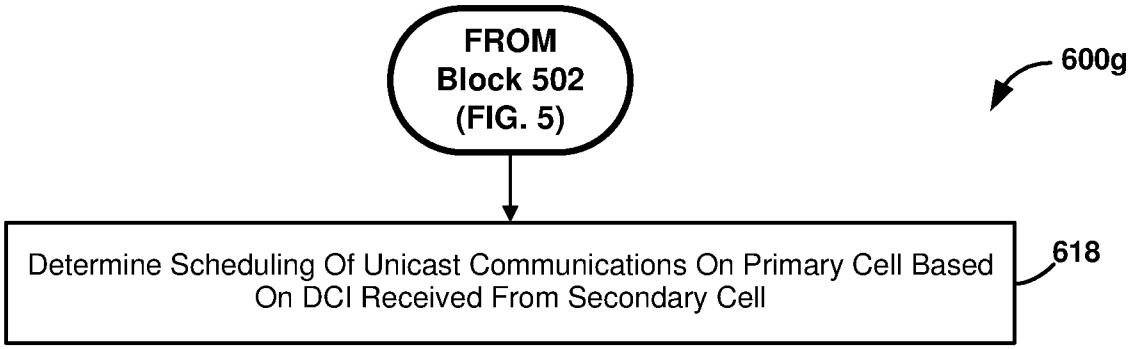

FIG. 6G

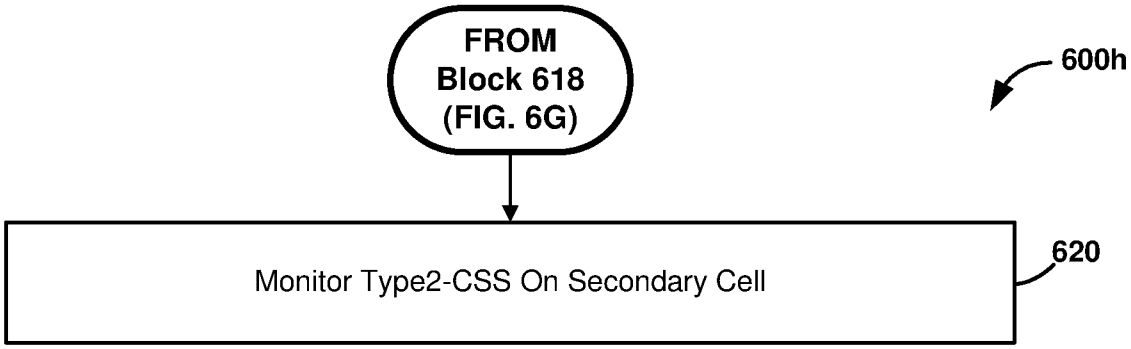

FIG. 6H

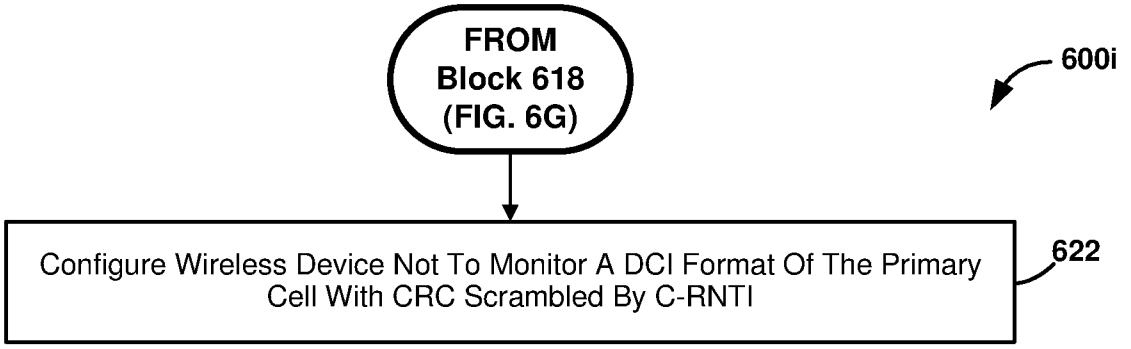

FIG. 6I

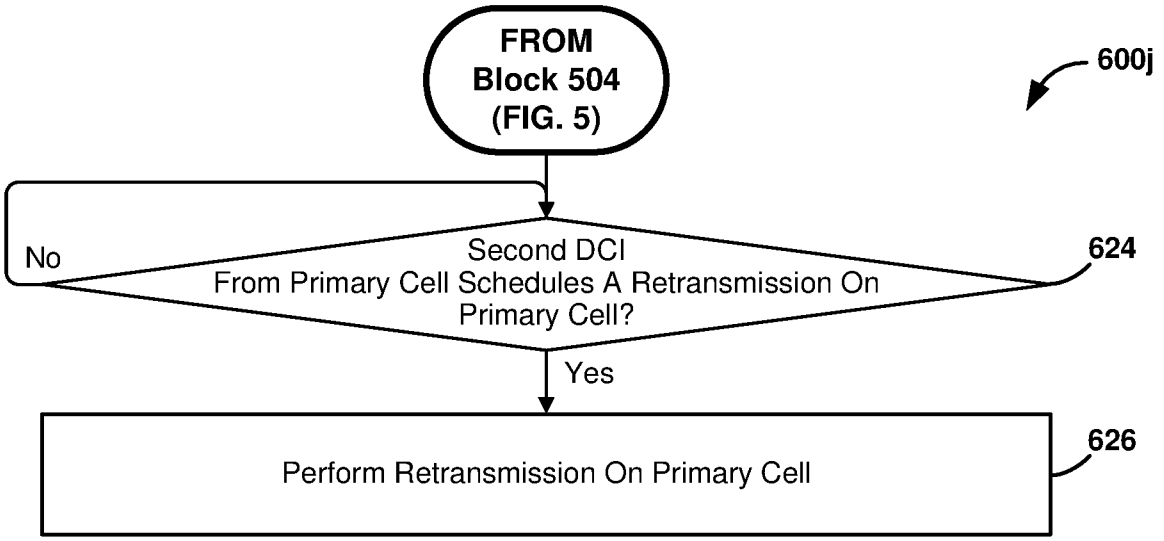
FROM
Block 504
(FIG. 5)
600j
No
Second DCI
From Primary Cell Schedules A Retransmission On
Primary Cell?
624
Yes
Perform Retransmission On Primary Cell
626

FIG. 6J

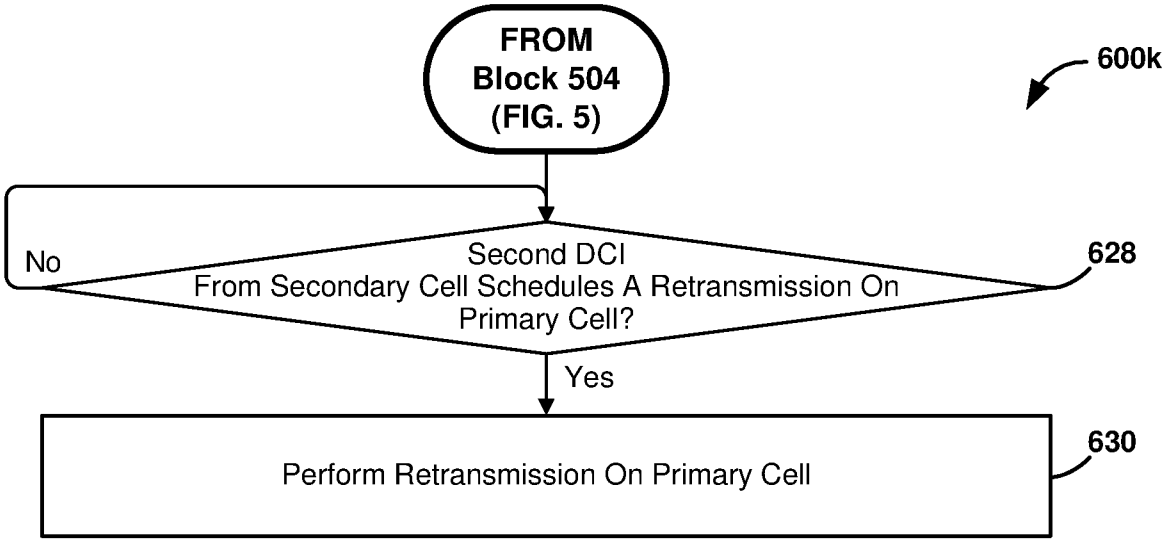
FROM
Block 504
(FIG. 5)
600k
No
Second DCI
From Secondary Cell Schedules A Retransmission On
Primary Cell?
628
Yes
Perform Retransmission On Primary Cell
630

FIG. 6K

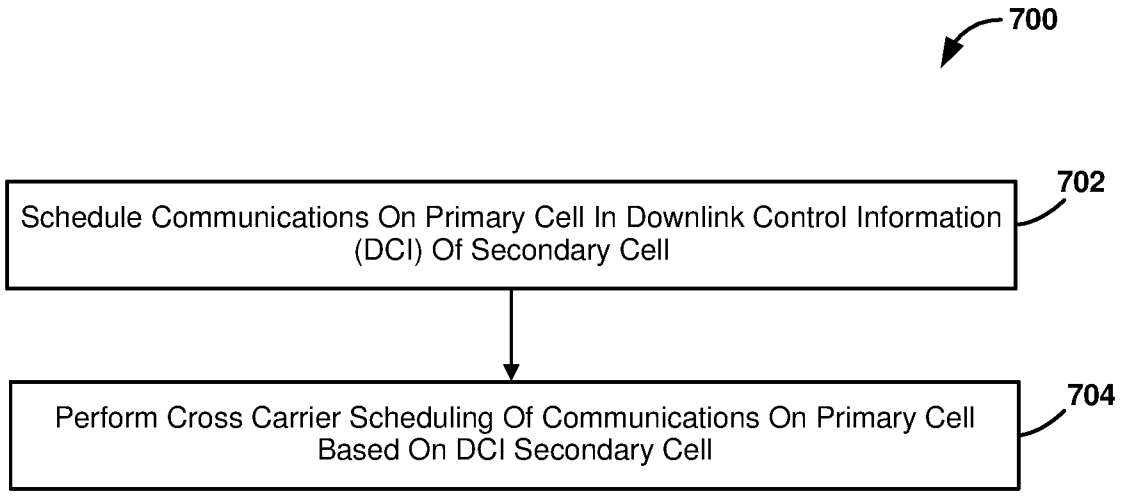
700
Schedule Communications On Primary Cell In Downlink Control Information (DCI) Of Secondary Cell
702
Perform Cross Carrier Scheduling Of Communications On Primary Cell Based On DCI Secondary Cell
704

FIG. 7

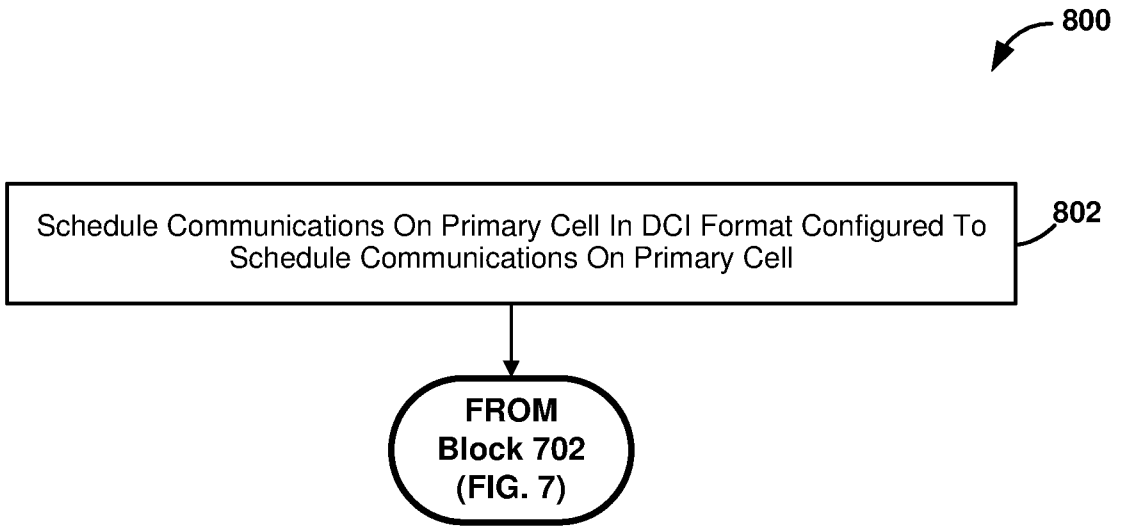
800
Schedule Communications On Primary Cell In DCI Format Configured To Schedule Communications On Primary Cell
802
FROM Block 702 (FIG. 7)

FIG. 8

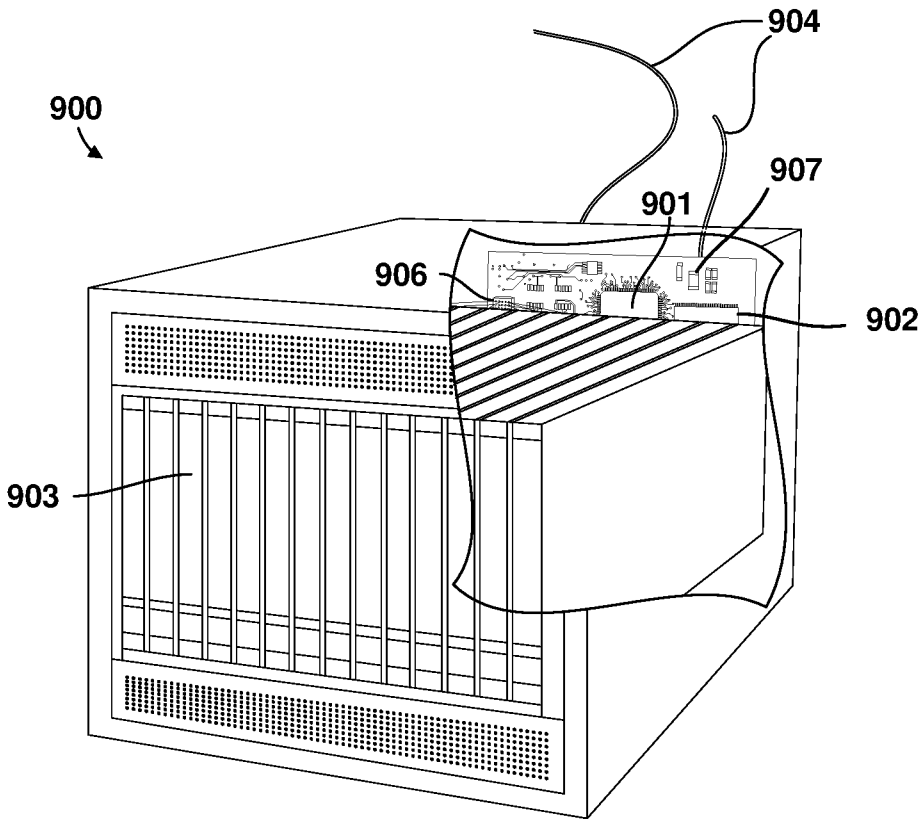

FIG. 9

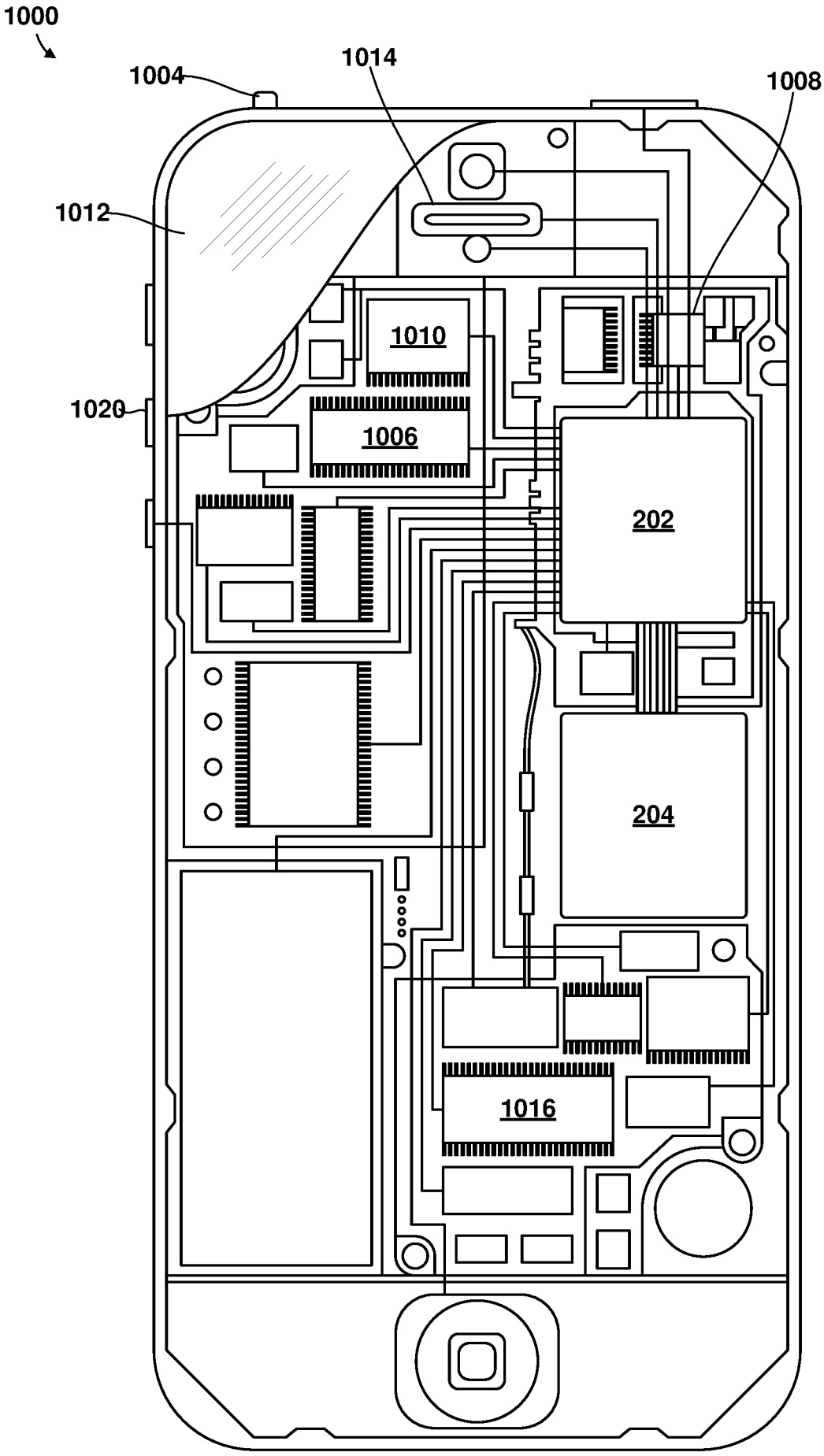

FIG. 10