FIG.1

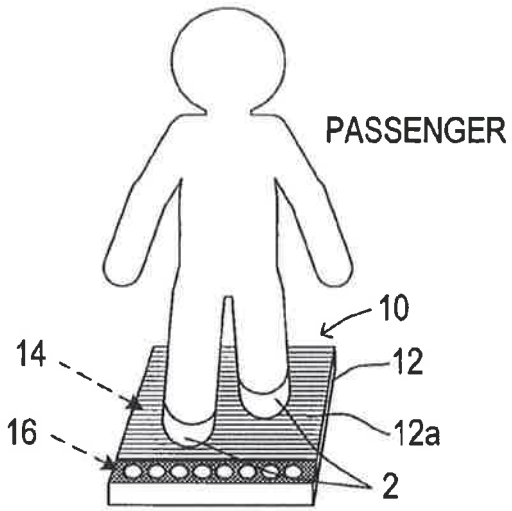
PASSENGER
10
14
12
16
12a
2

FIG.2

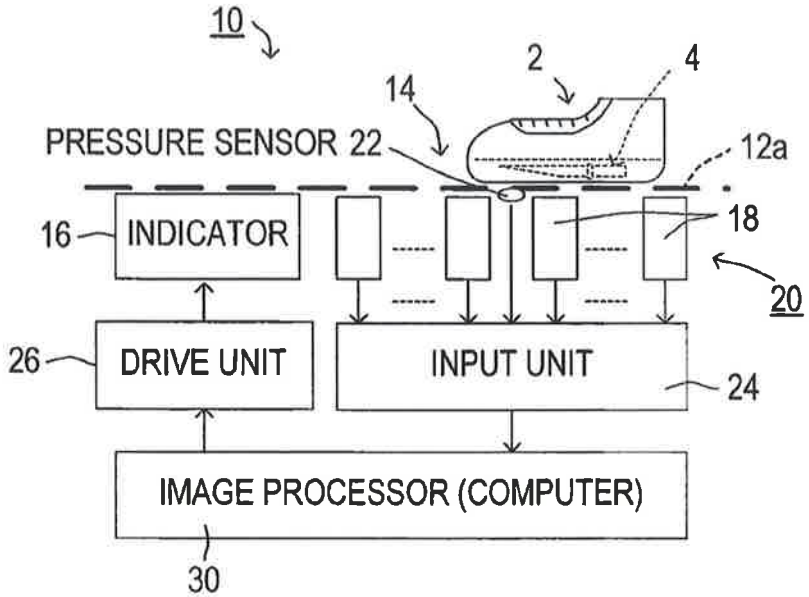
10
2
4
14
PRESSURE SENSOR 22
12a
16
INDICATOR
18
20
26
DRIVE UNIT
INPUT UNIT
24
IMAGE PROCESSOR (COMPUTER)
30

FIG.3

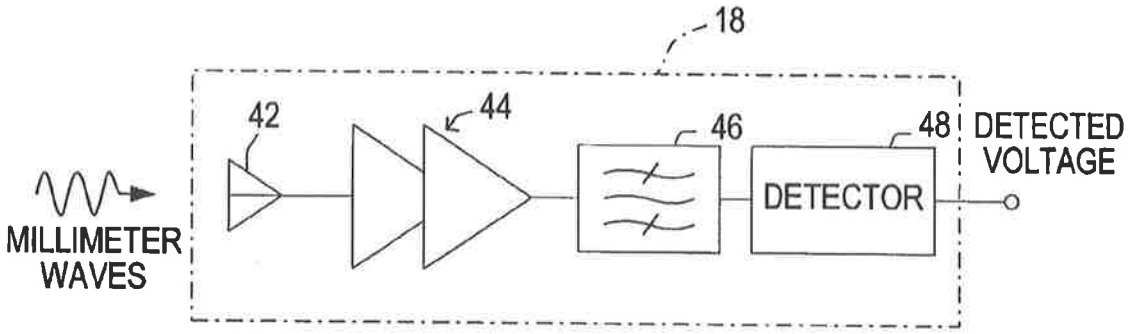
18
42
44
46
48
DETECTED VOLTAGE
DETECTOR
MILLIMETER WAVES

FIG.4

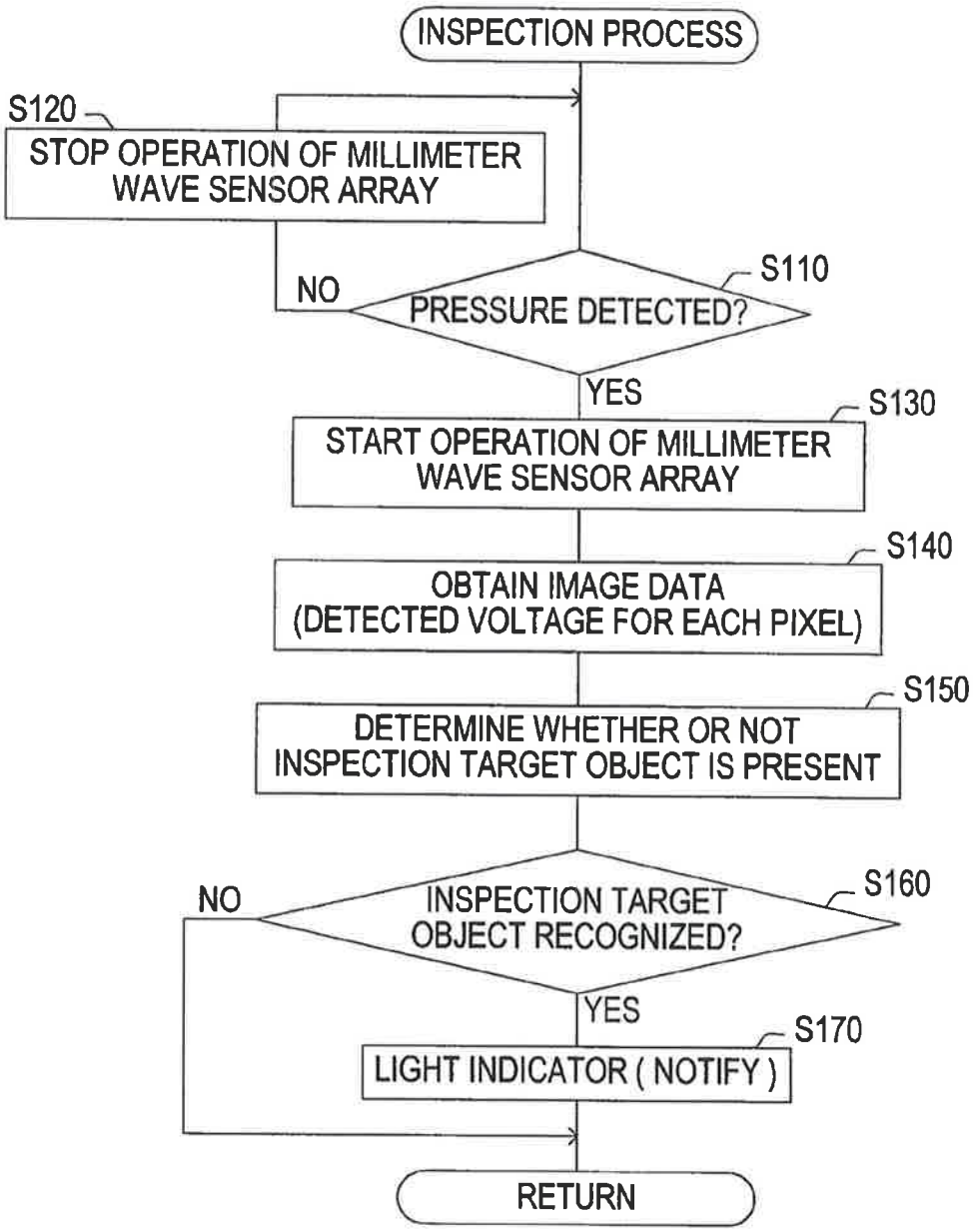
INSPECTION PROCESS
S120
STOP OPERATION OF MILLIMETER WAVE SENSOR ARRAY
NO
S110
PRESSURE DETECTED?
YES
S130
START OPERATION OF MILLIMETER WAVE SENSOR ARRAY
S140
OBTAIN IMAGE DATA (DETECTED VOLTAGE FOR EACH PIXEL)
S150
DETERMINE WHETHER OR NOT INSPECTION TARGET OBJECT IS PRESENT
NO
S160
INSPECTION TARGET OBJECT RECOGNIZED?
YES
S170
LIGHT INDICATOR (NOTIFY)
RETURN