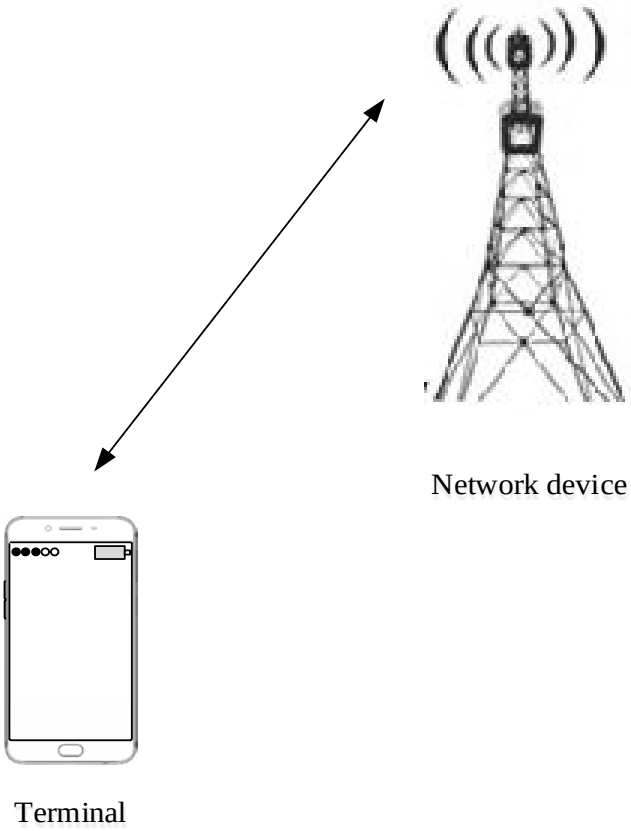

FIG. 1

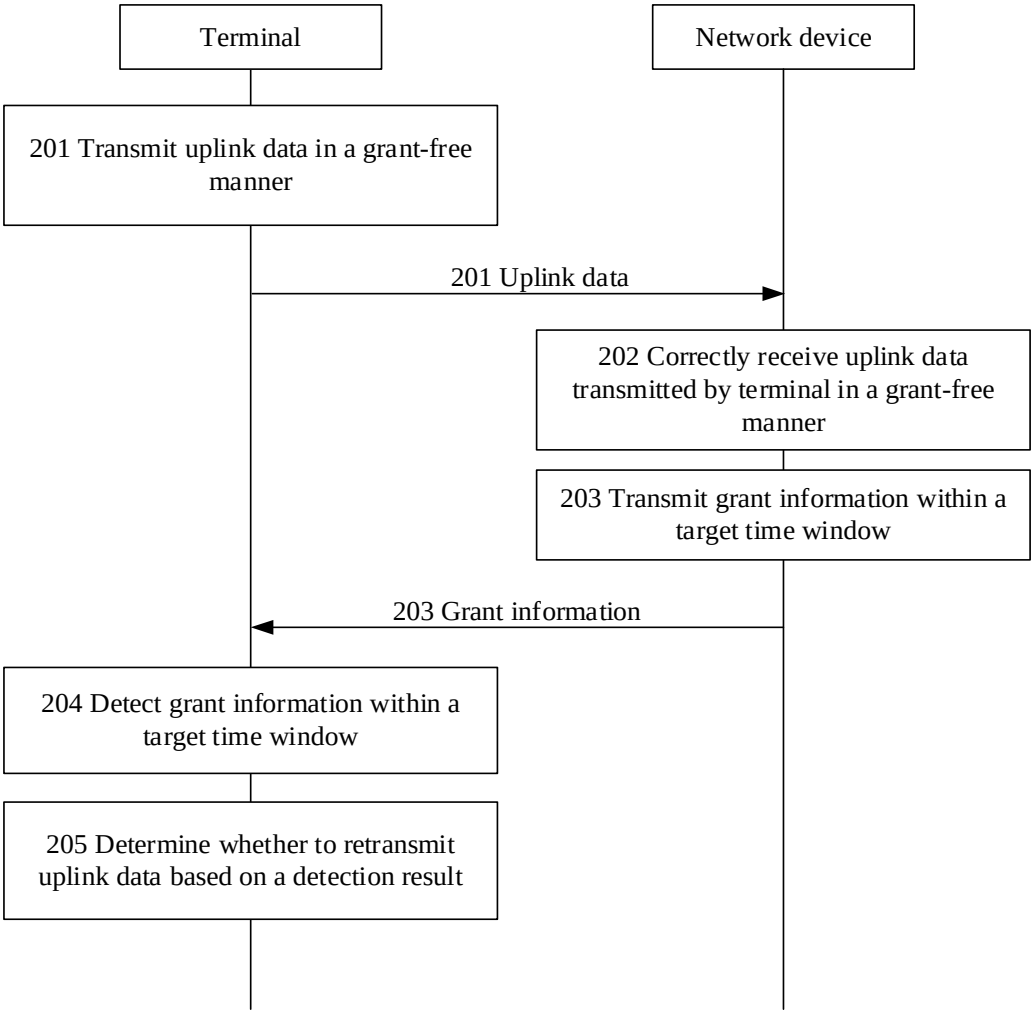
Terminal
Network device
201 Transmit uplink data in a grant-free manner
201 Uplink data
202 Correctly receive uplink data transmitted by terminal in a grant-free manner
203 Transmit grant information within a target time window
203 Grant information
204 Detect grant information within a target time window
205 Determine whether to retransmit uplink data based on a detection result

FIG. 2A

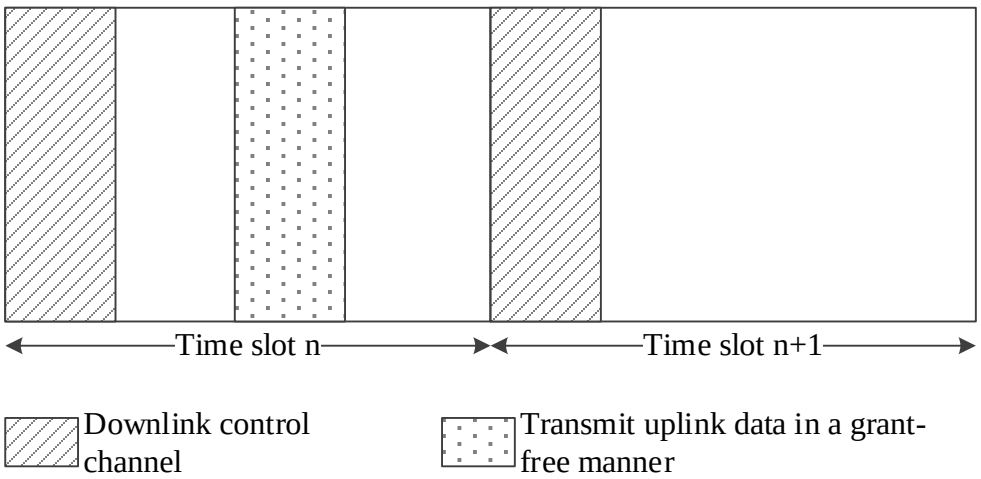
Time slot n
Time slot n+1
Downlink control channel
Transmit uplink data in a grant-free manner

FIG. 2B

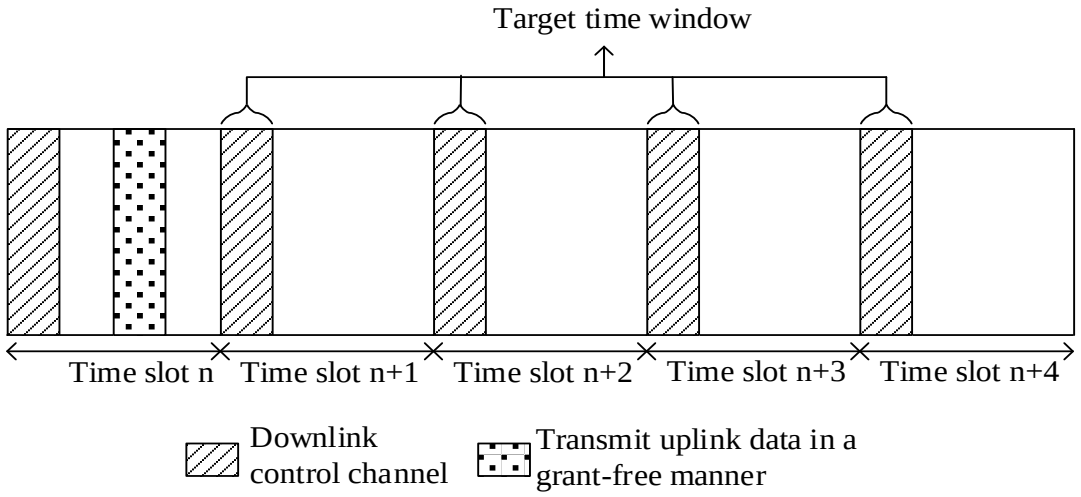
Target time window
Time slot n
Time slot n+1
Time slot n+2
Time slot n+3
Time slot n+4
Downlink control channel
Transmit uplink data in a grant-free manner

FIG. 2C

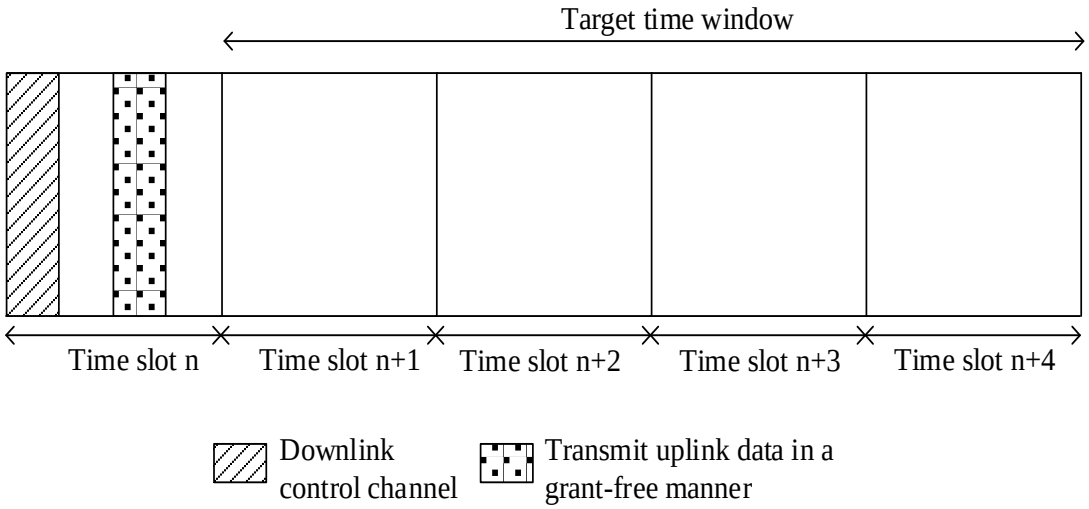
Target time window
Time slot n
Time slot n+1
Time slot n+2
Time slot n+3
Time slot n+4
Downlink control channel
Transmit uplink data in a grant-free manner

FIG. 2D

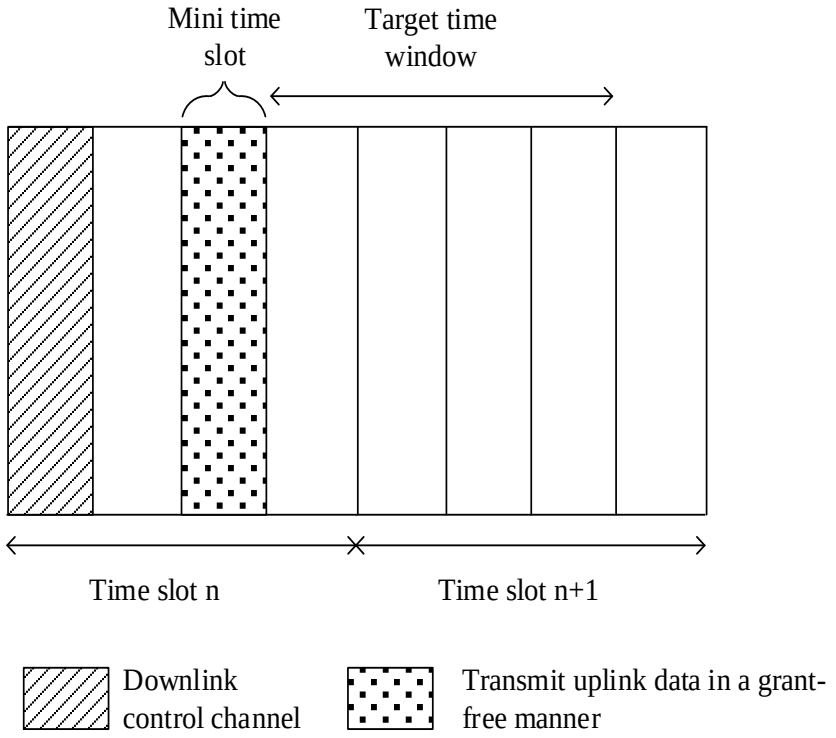
Mini time slot
Target time window
Time slot n
Time slot n+1
Downlink control channel
Transmit uplink data in a grant-free manner

FIG. 2E

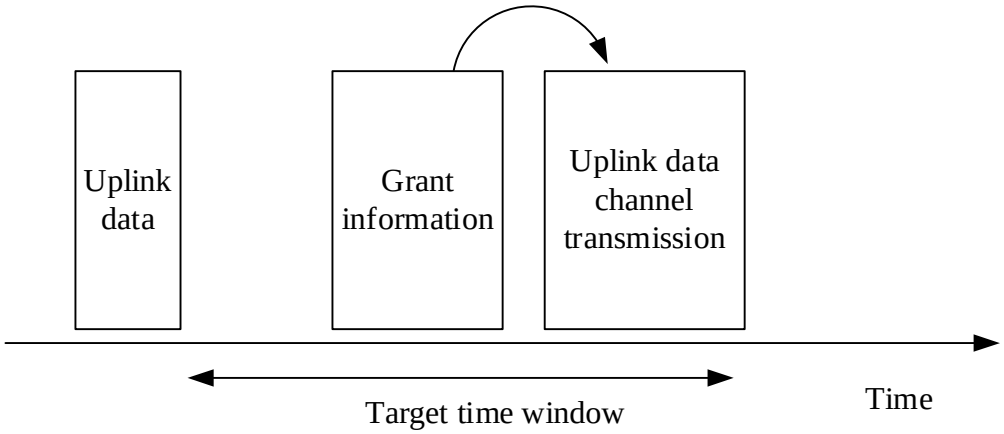
Uplink data
Grant information
Uplink data channel transmission
Target time window
Time

FIG. 2F

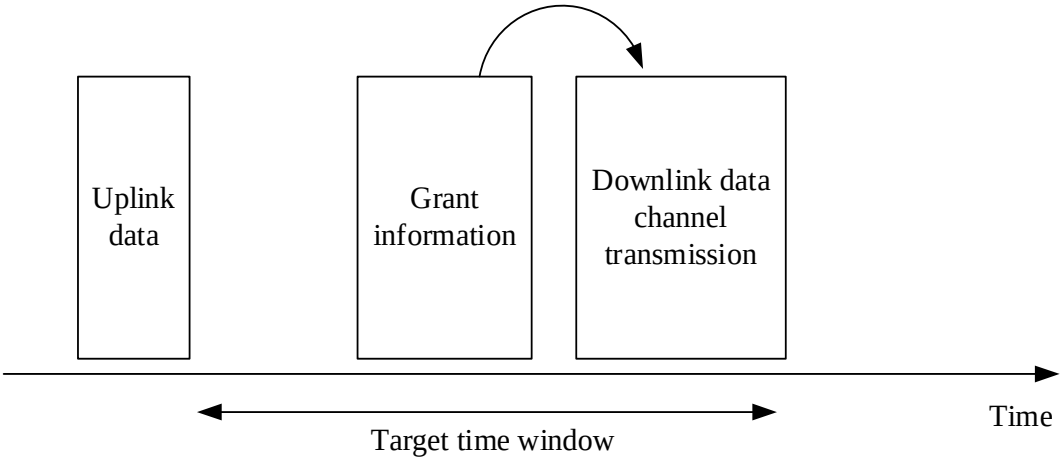
Uplink data
Grant information
Downlink data channel transmission
Time
Target time window

FIG. 2G

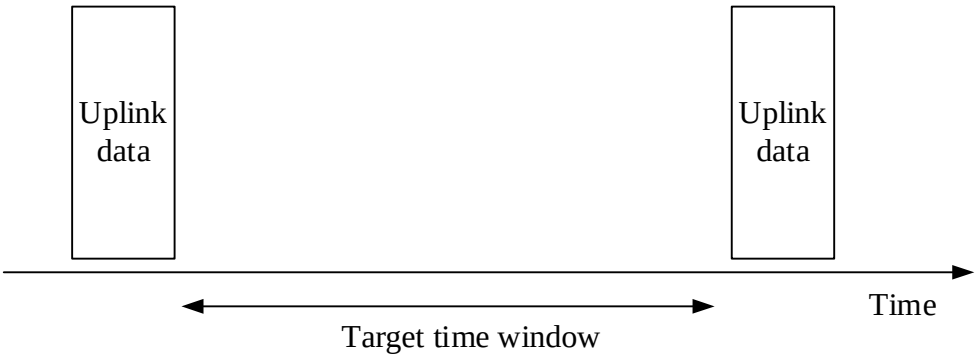
Uplink data
Uplink data
Time
Target time window

FIG. 2H

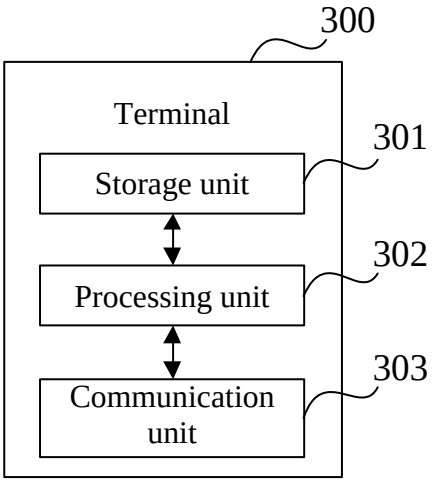
300
Terminal
301
Storage unit
302
Processing unit
303
Communication unit

FIG. 3A

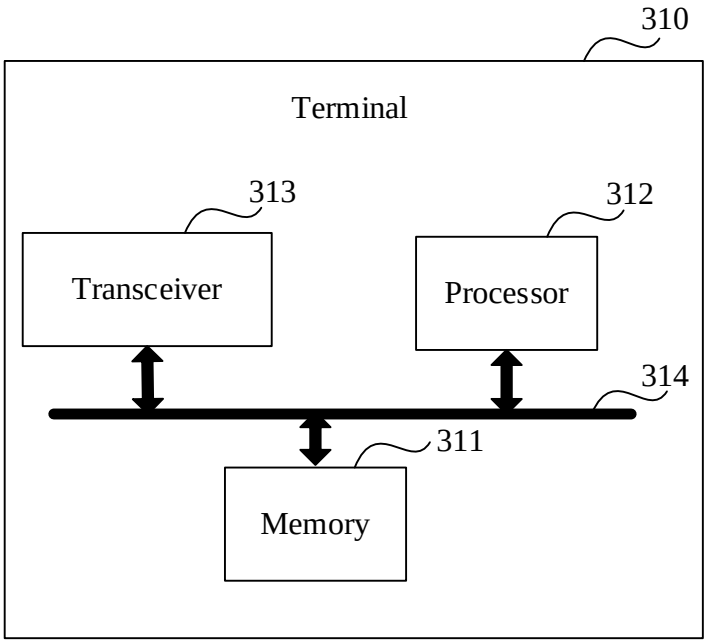
310
Terminal
313
Transceiver
312
Processor
314
311
Memory

FIG. 3B

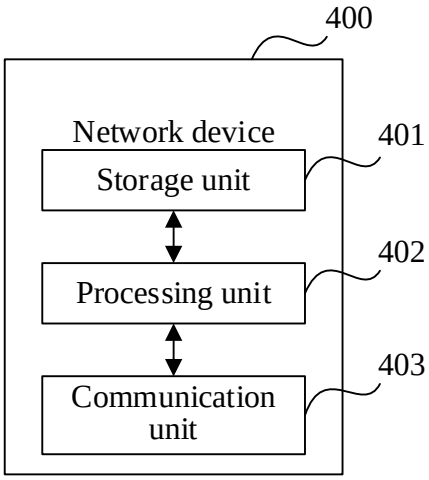
400
Network device
401
Storage unit
402
Processing unit
403
Communication unit

FIG. 4A

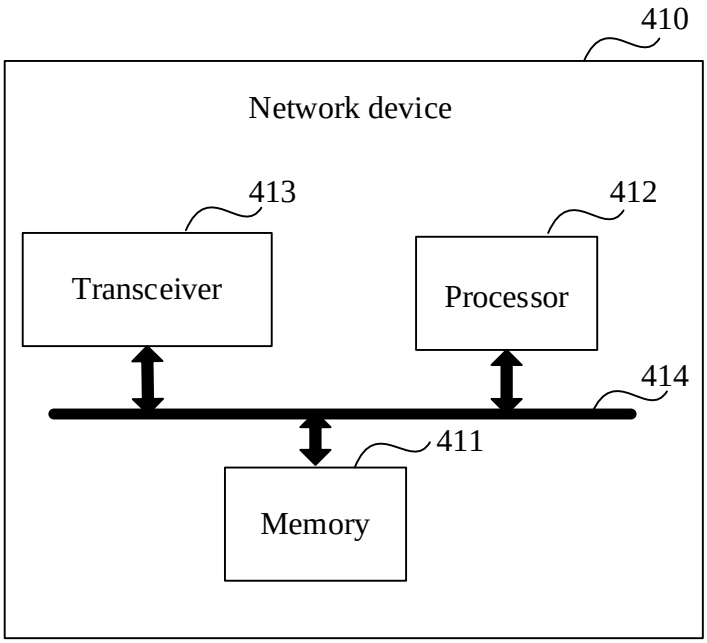
410
Network device
413
412
Transceiver
Processor
414
411
Memory

FIG. 4B

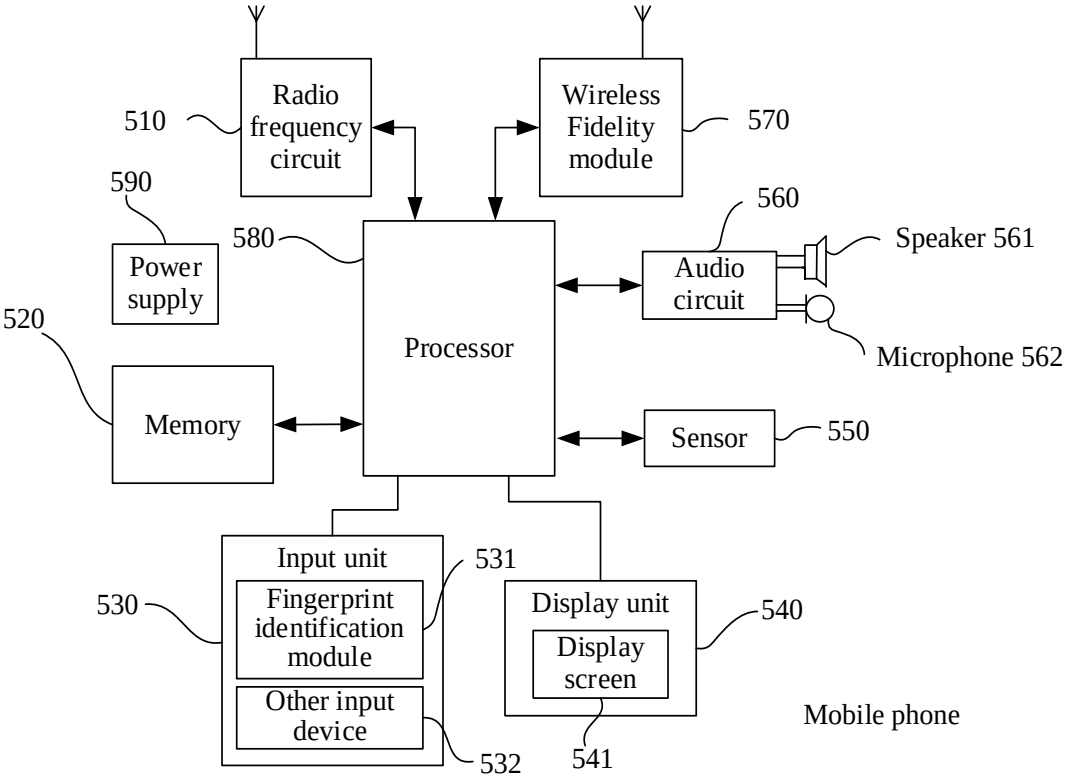
Radio frequency circuit
510
Wireless Fidelity module
570
590
Power supply
580
Processor
560
Audio circuit
Speaker 561
Microphone 562
520
Memory
Sensor
550
Input unit
531
530
Fingerprint identification module
Other input device
532
Display unit
540
Display screen
541
Mobile phone

FIG. 5