FIG. 1

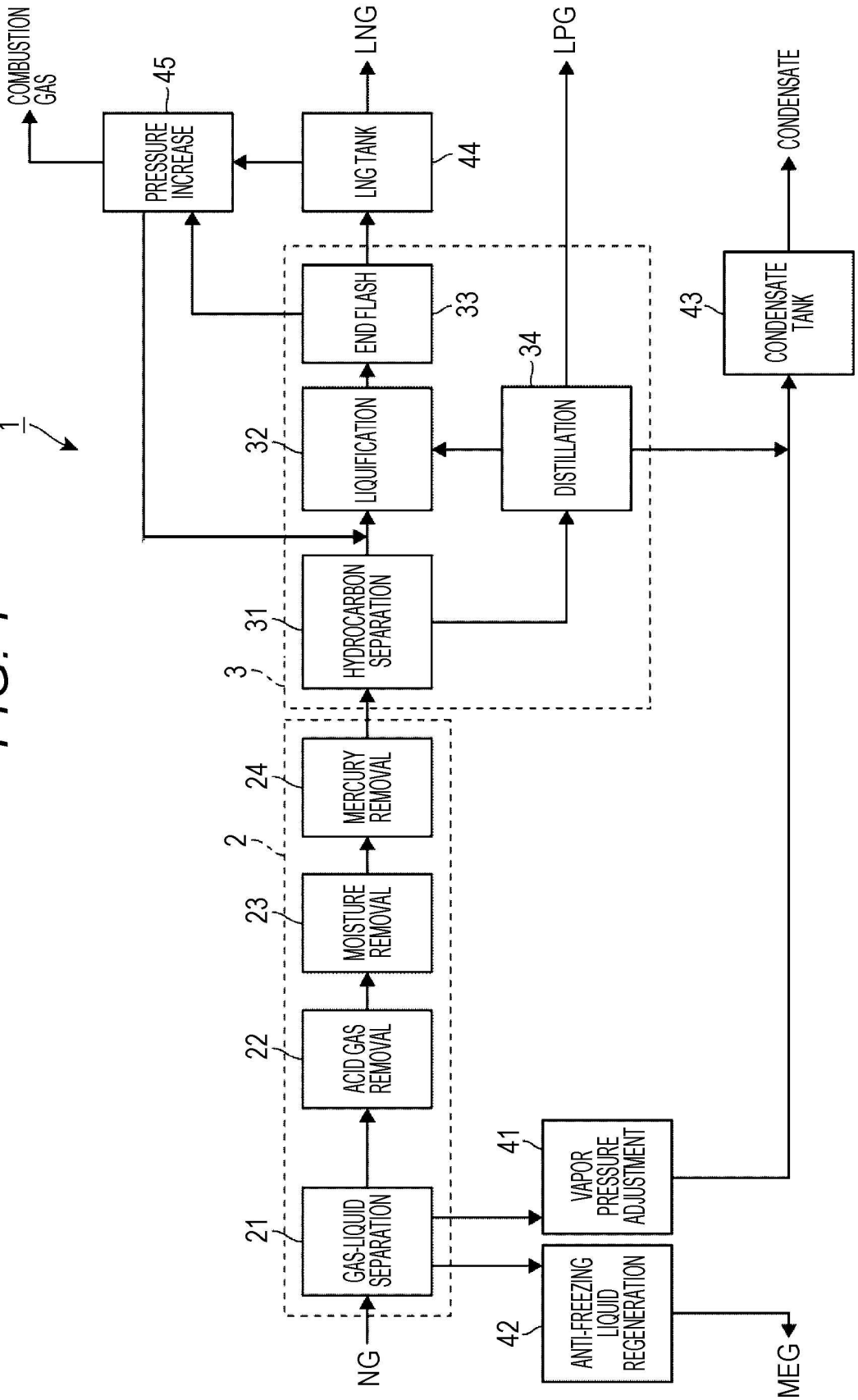
1
NG
MEG
2
3
21
GAS-LIQUID SEPARATION
22
ACID GAS REMOVAL
23
MOISTURE REMOVAL
24
MERCURY REMOVAL
31
HYDROCARBON SEPARATION
32
LIQUIFICATION
33
END FLASH
34
DISTILLATION
41
VAPOR PRESSURE ADJUSTMENT
42
ANTI-FREEZING LIQUID REGENERATION
43
CONDENSATE TANK
44
LNG TANK
45
PRESSURE INCREASE
COMBUSTION GAS
LNG
LPG
CONDENSATE

FIG. 2

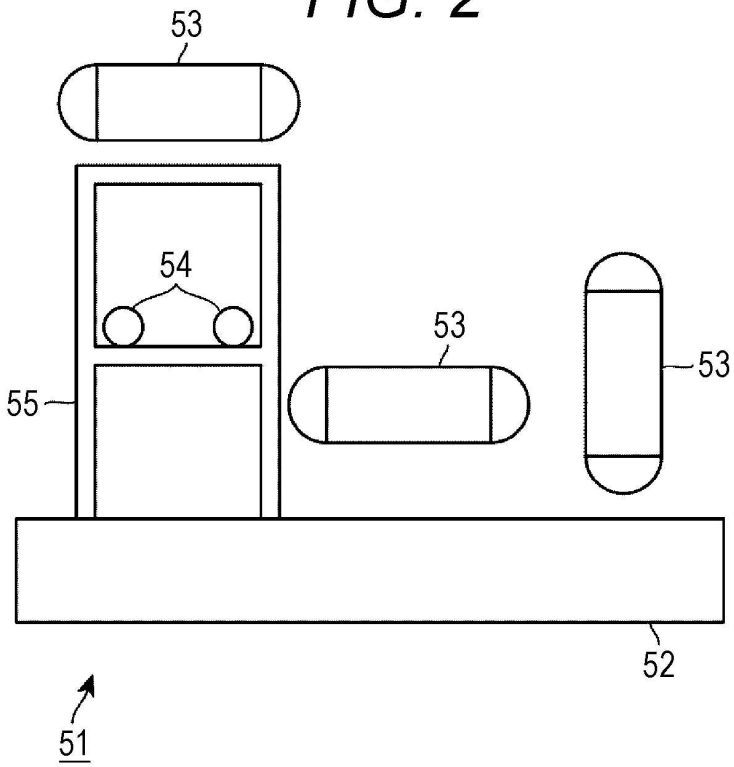


FIG. 3

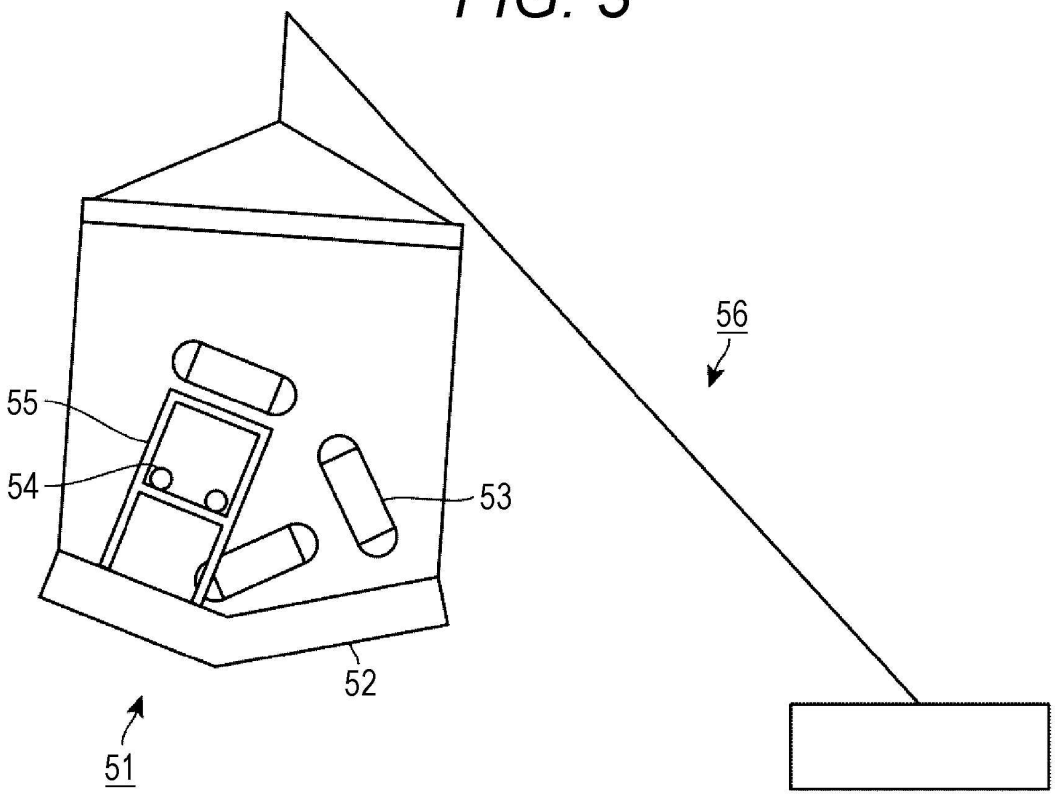

FIG. 4

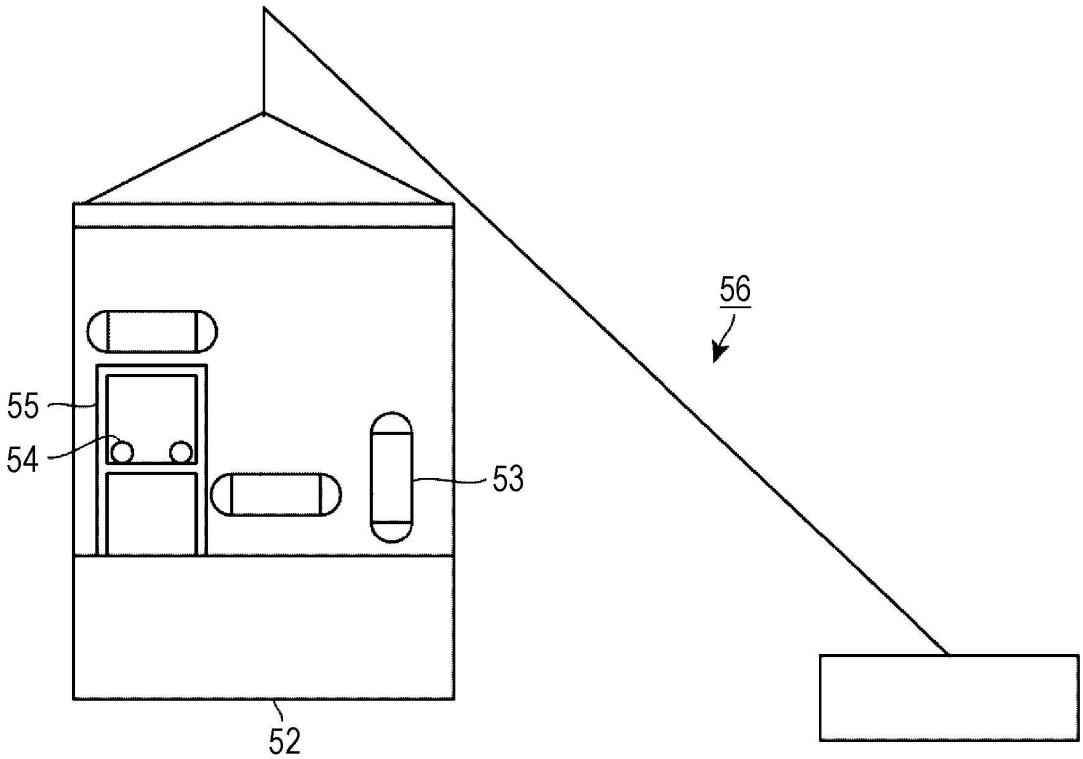

FIG. 5

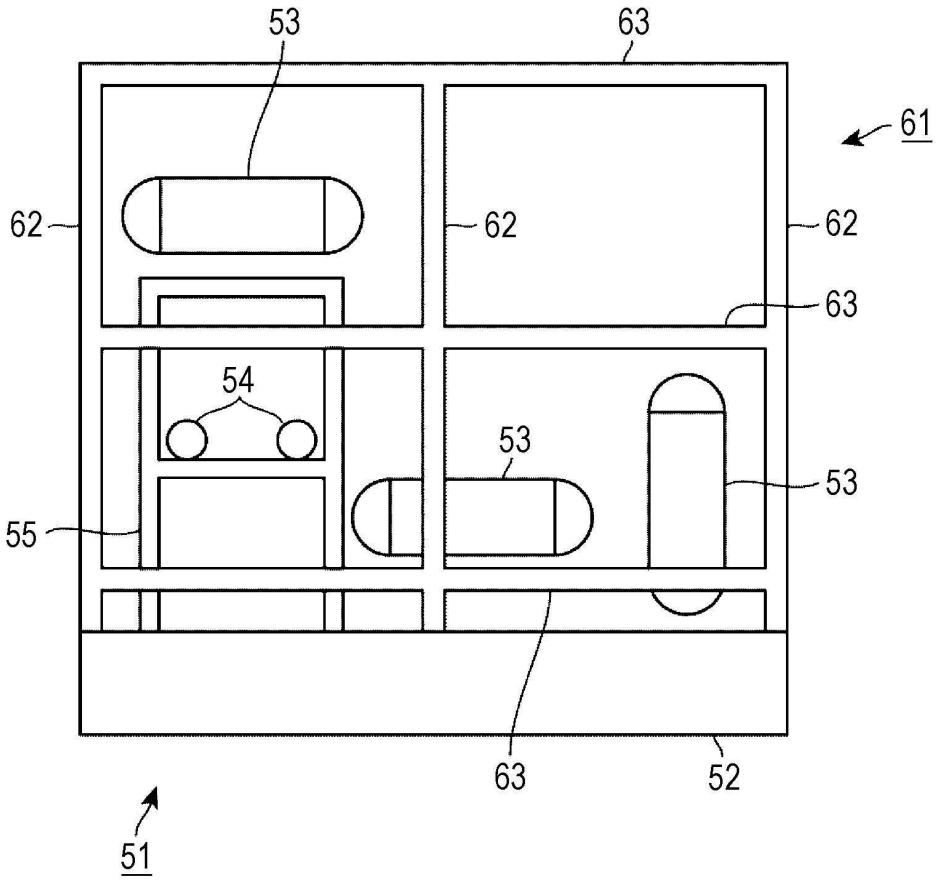

FIG. 6

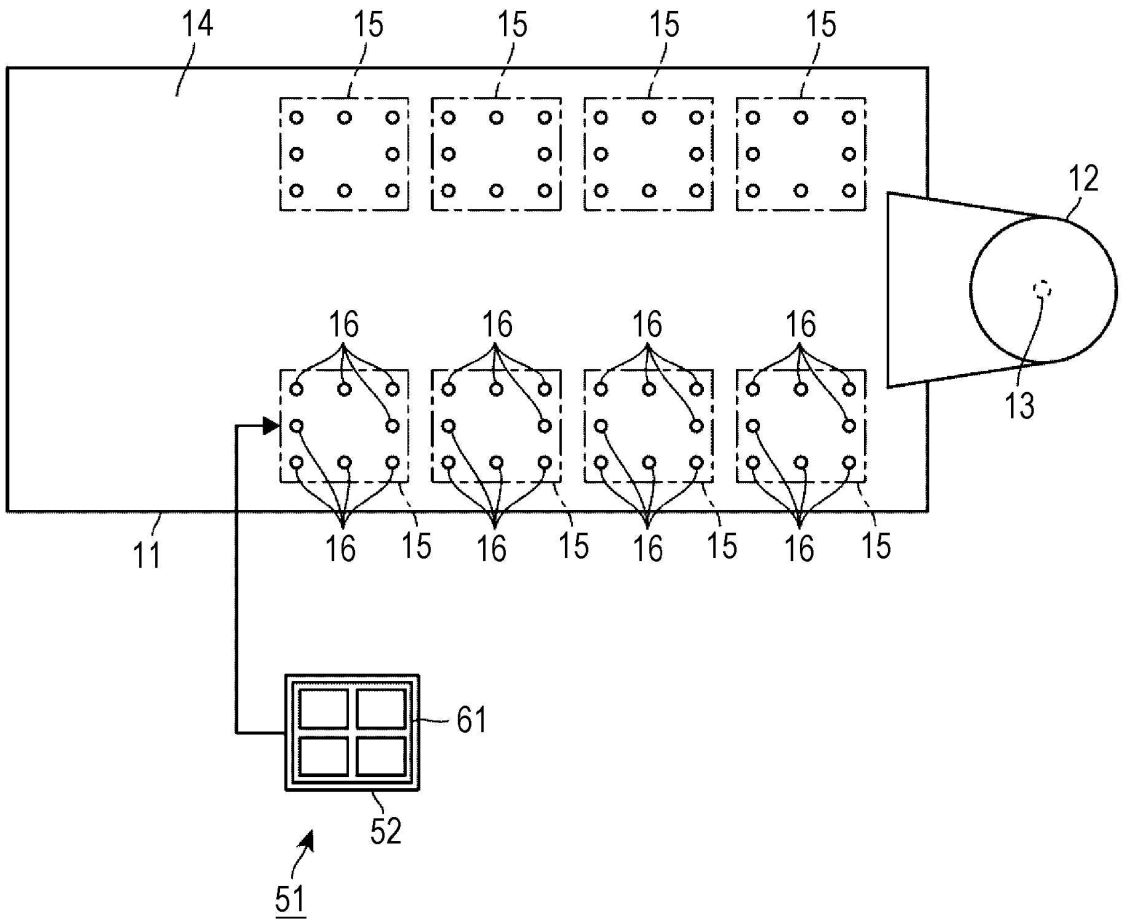

FIG. 7

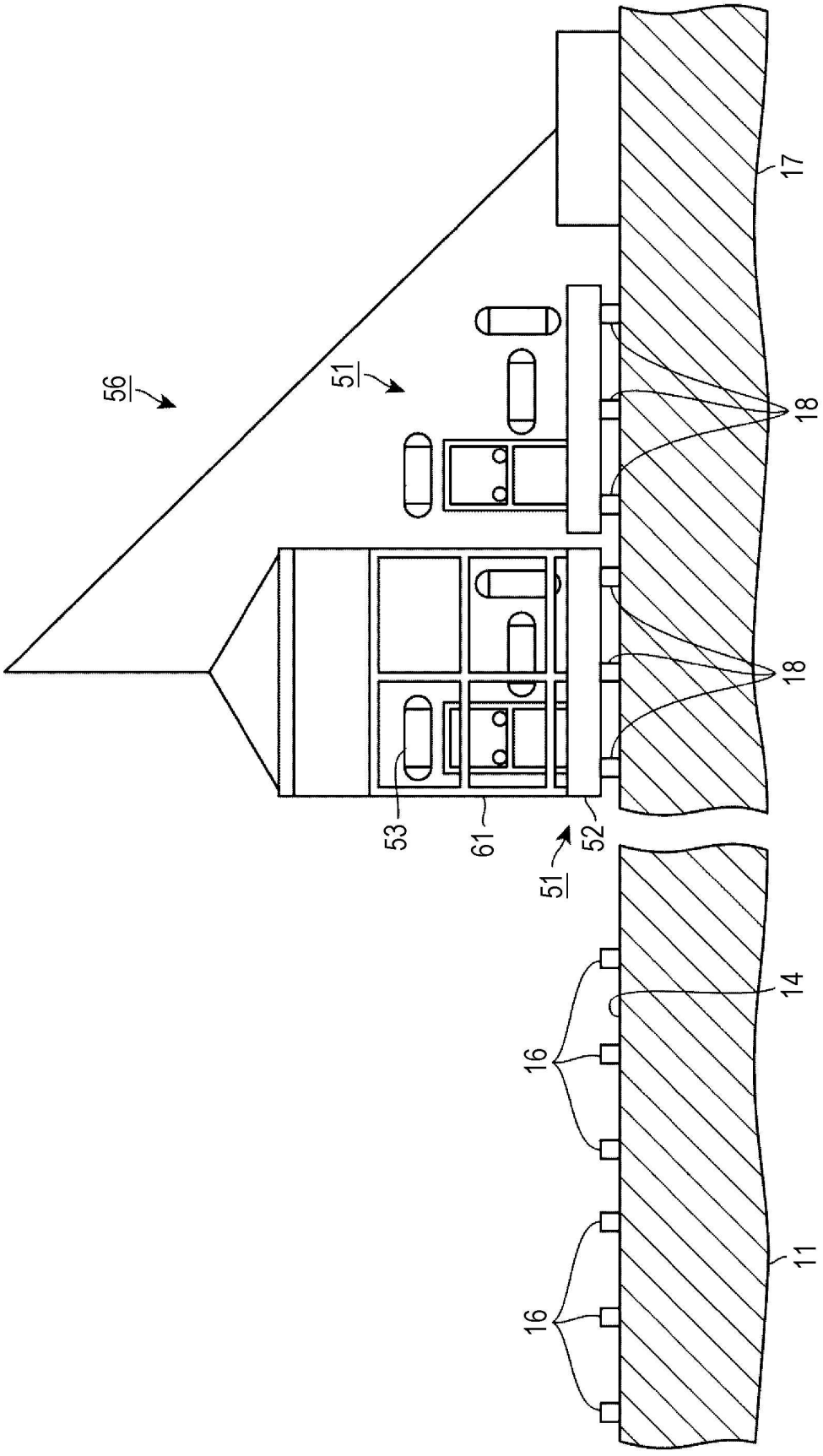

FIG. 8

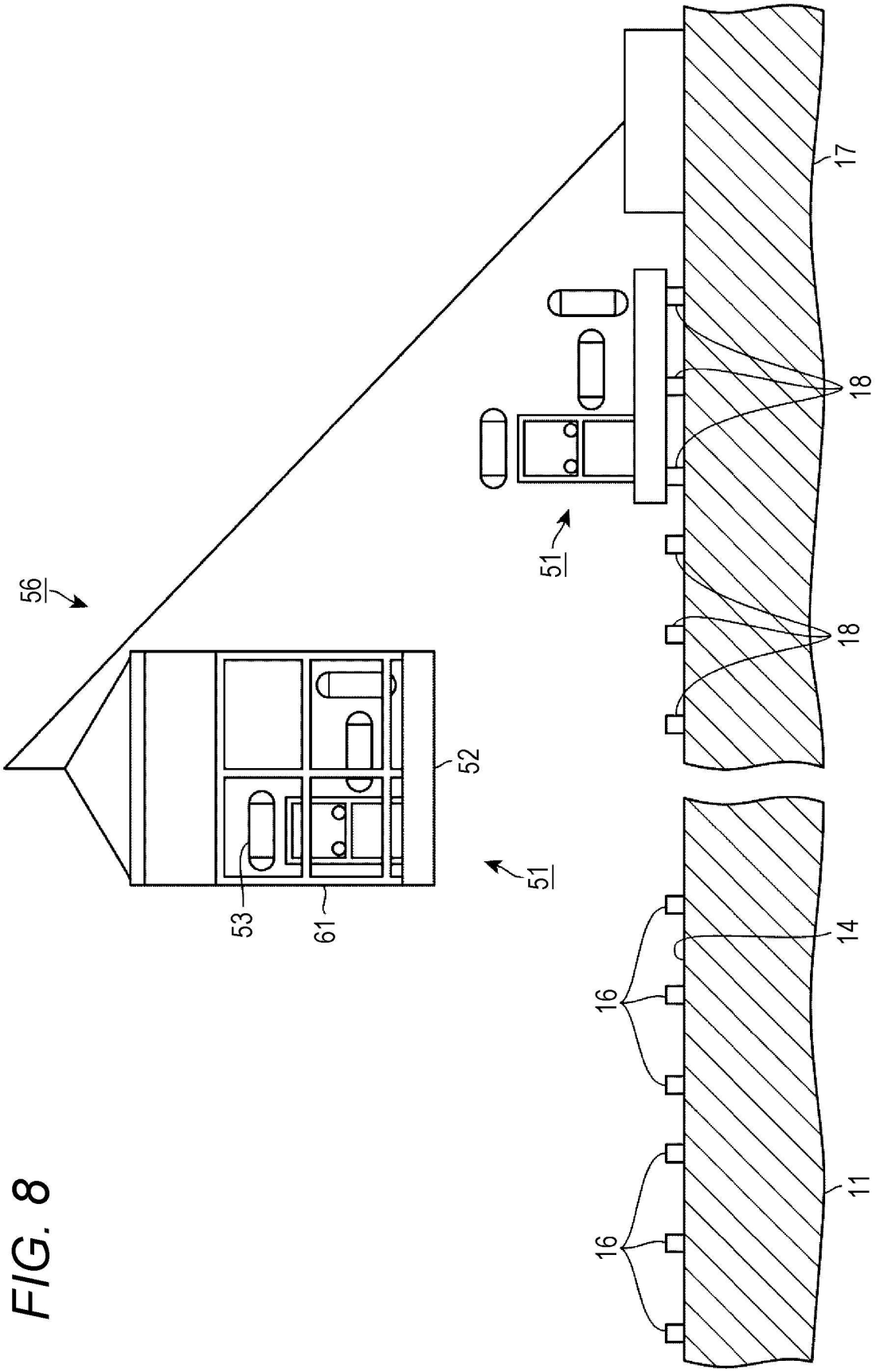

FIG. 9

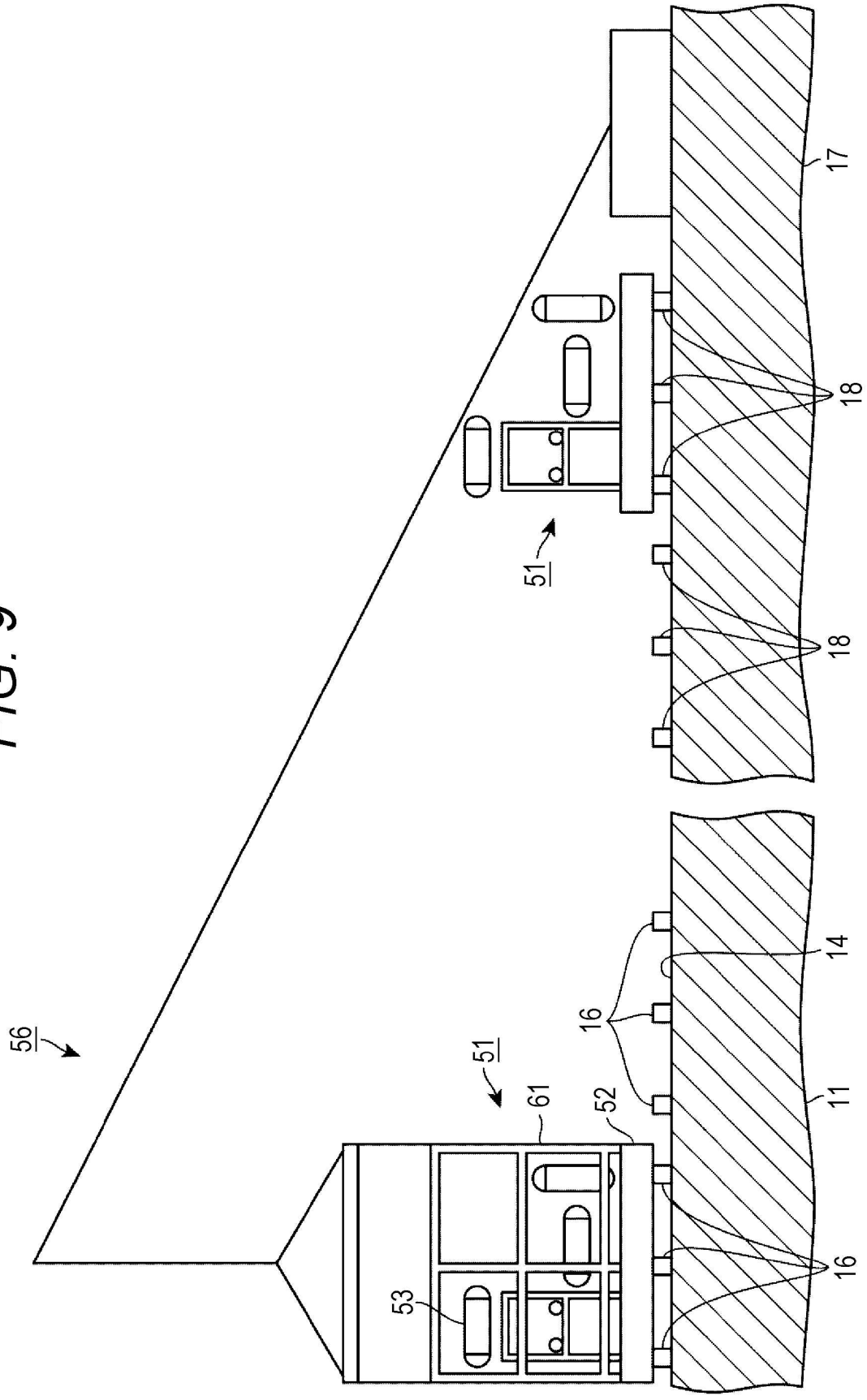

FIG. 10

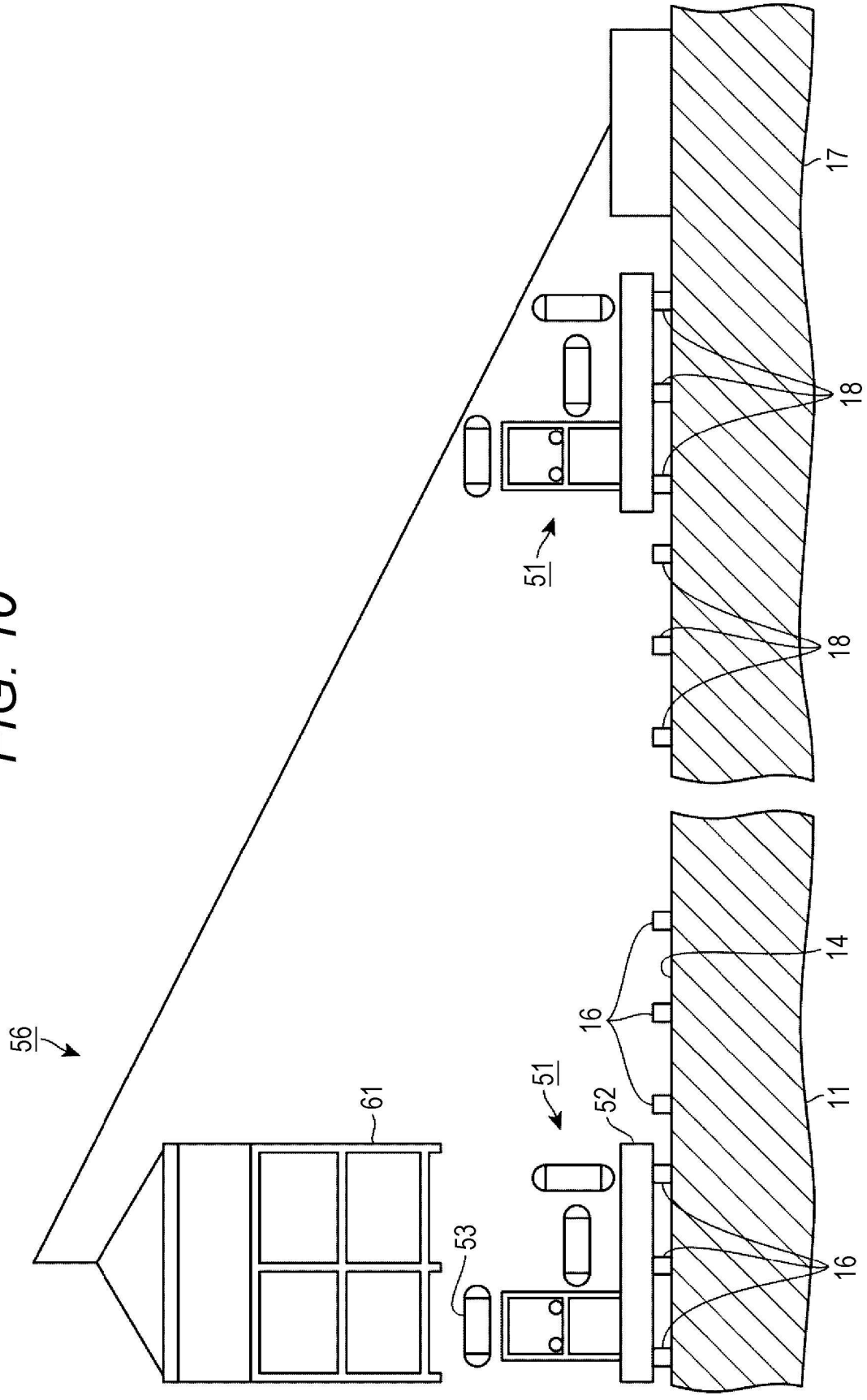

FIG. 11

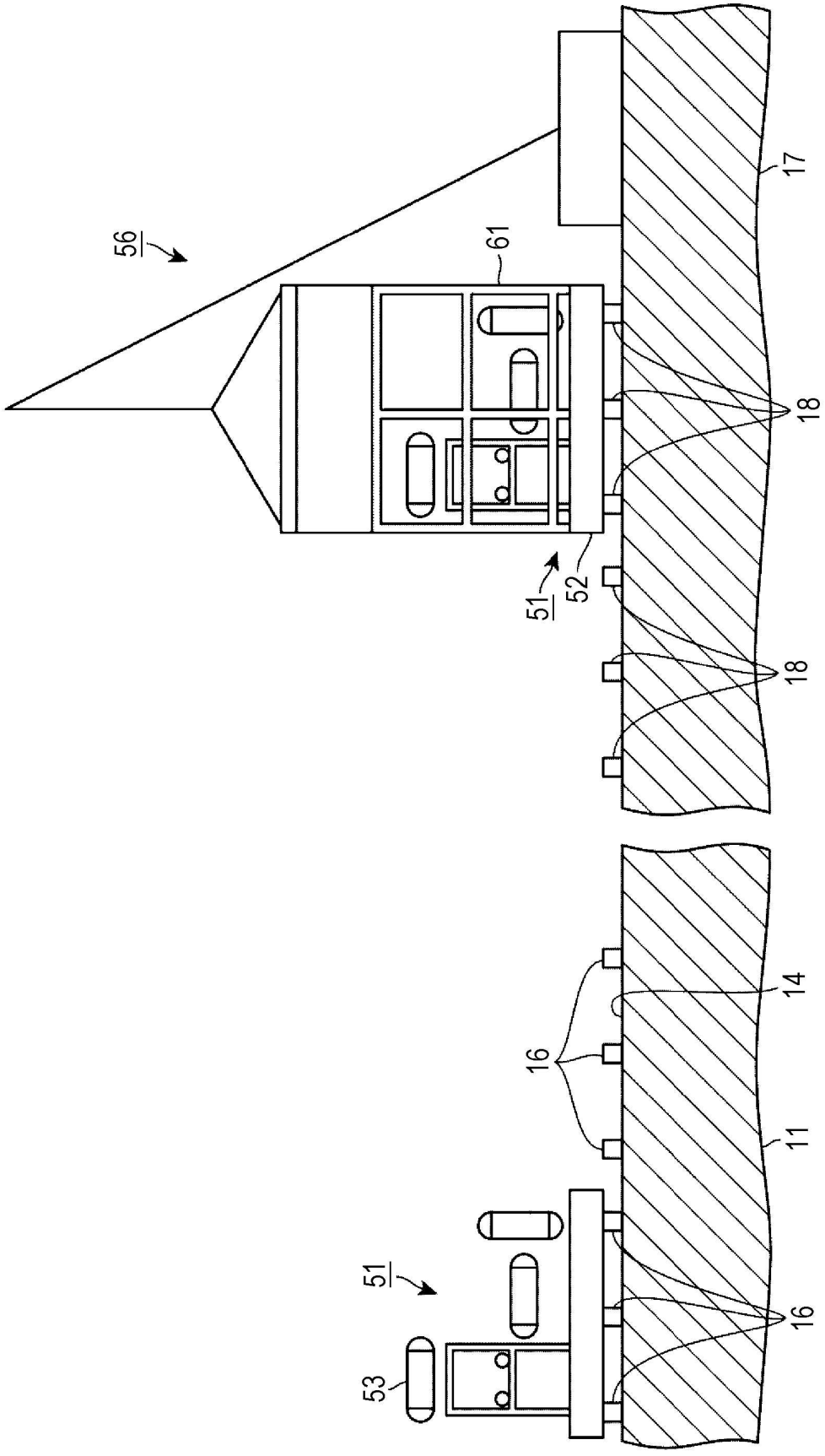

FIG. 12

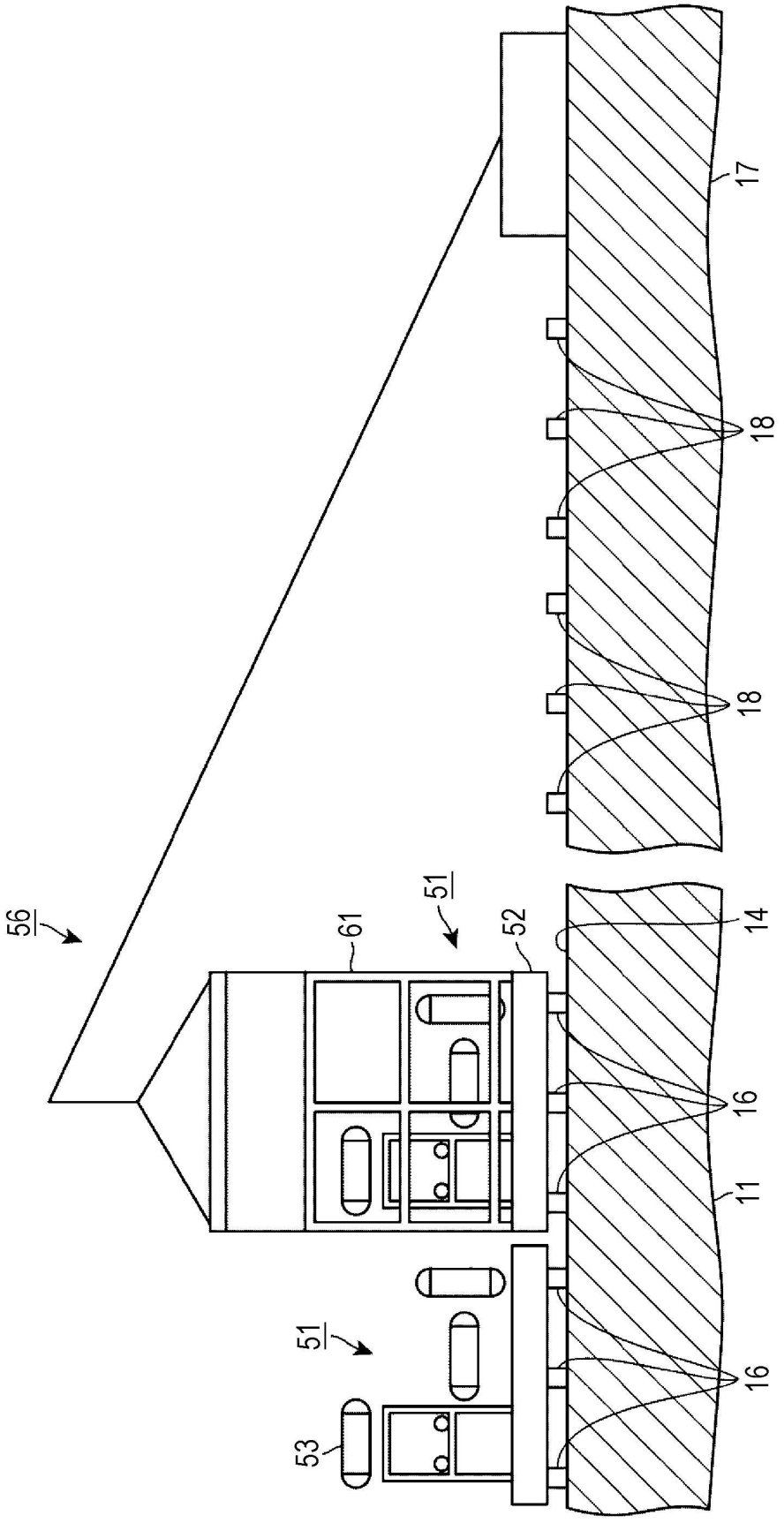

FIG. 13

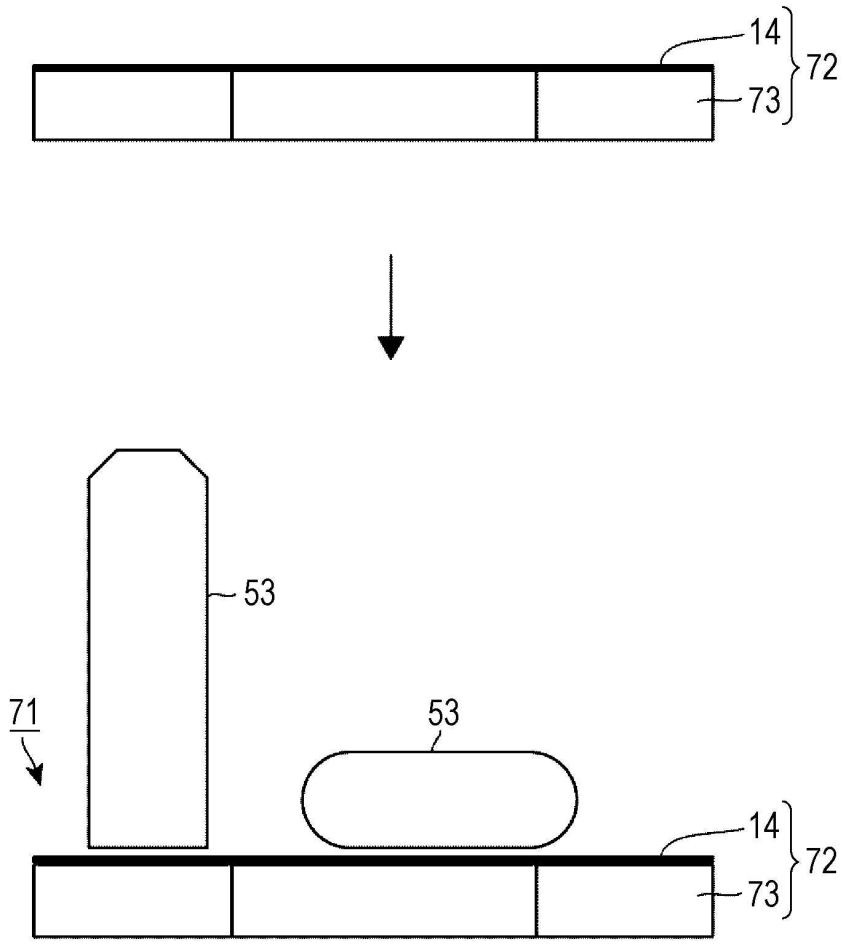

FIG. 14

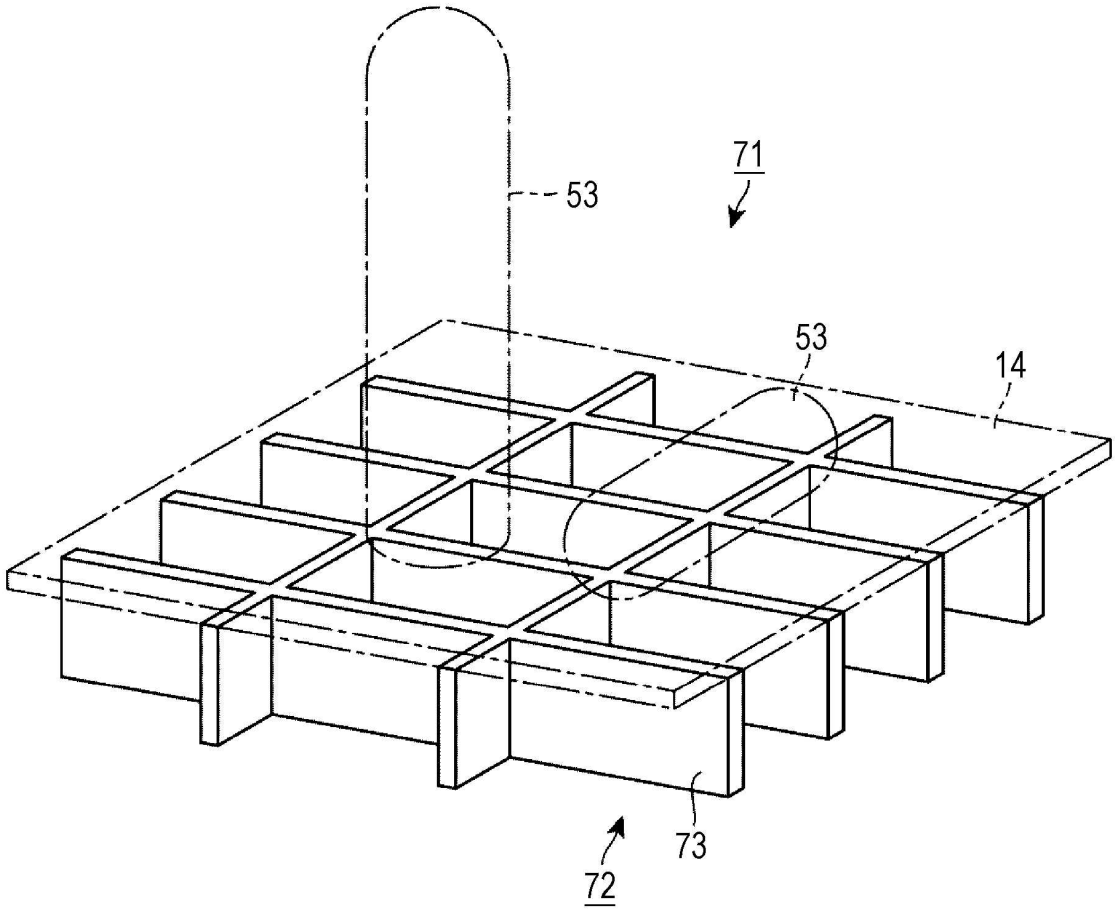

FIG. 15

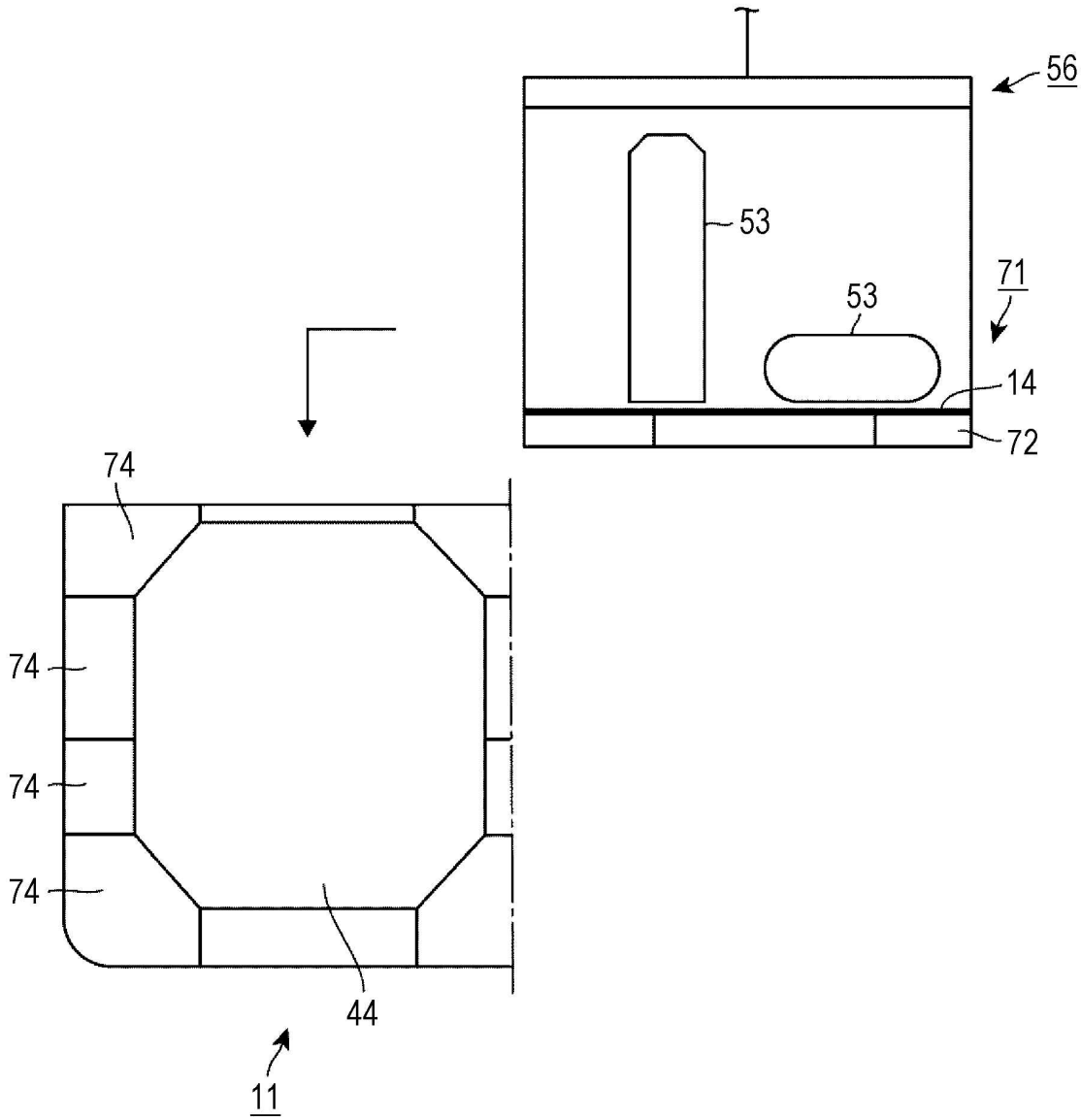

FIG. 16

