FIG. 1A

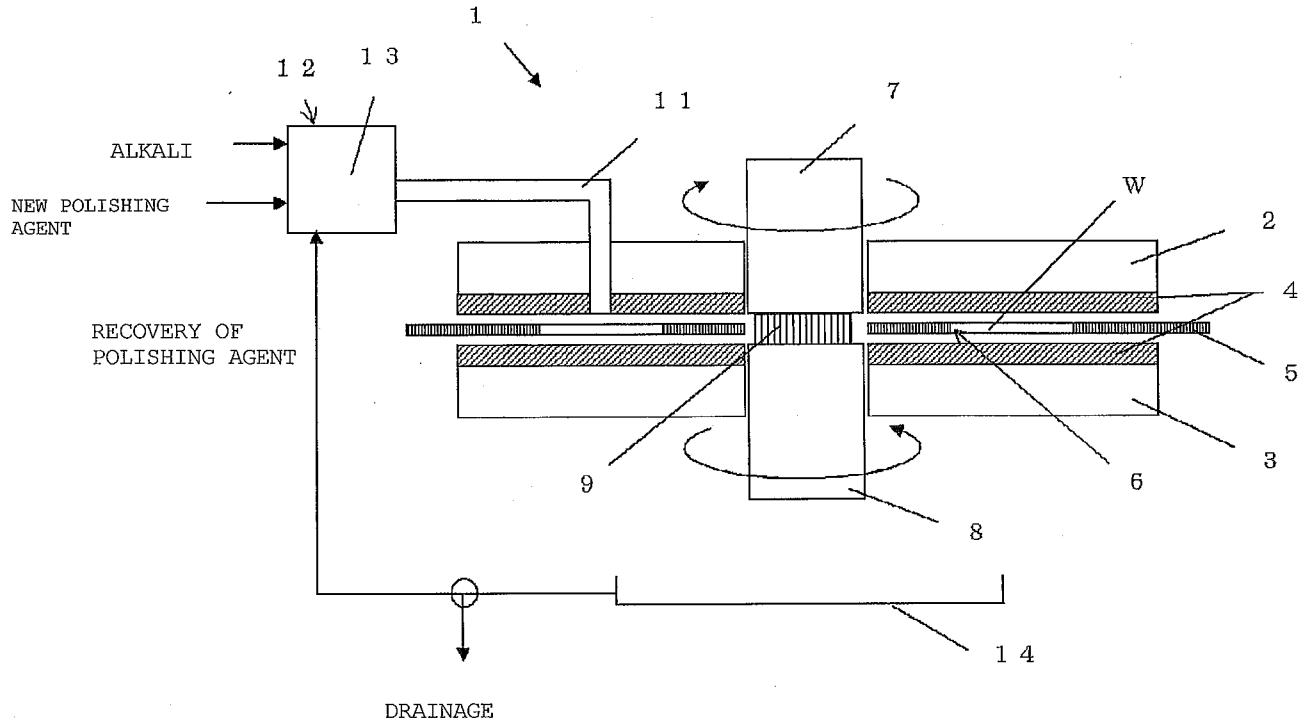
1
12
13
11
7
ALKALI
NEW POLISHING AGENT
RECOVERY OF POLISHING AGENT
W
2
4
5
3
9
6
8
14
DRAINAGE

FIG. 1B

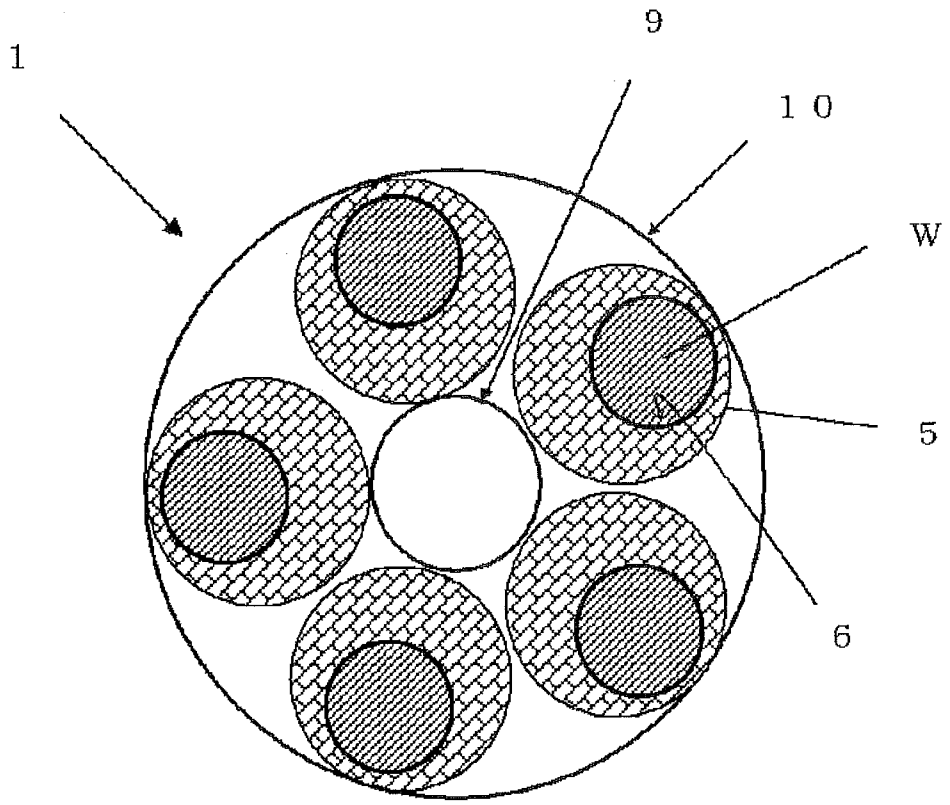
1
9
10
W
5
6

FIG. 2

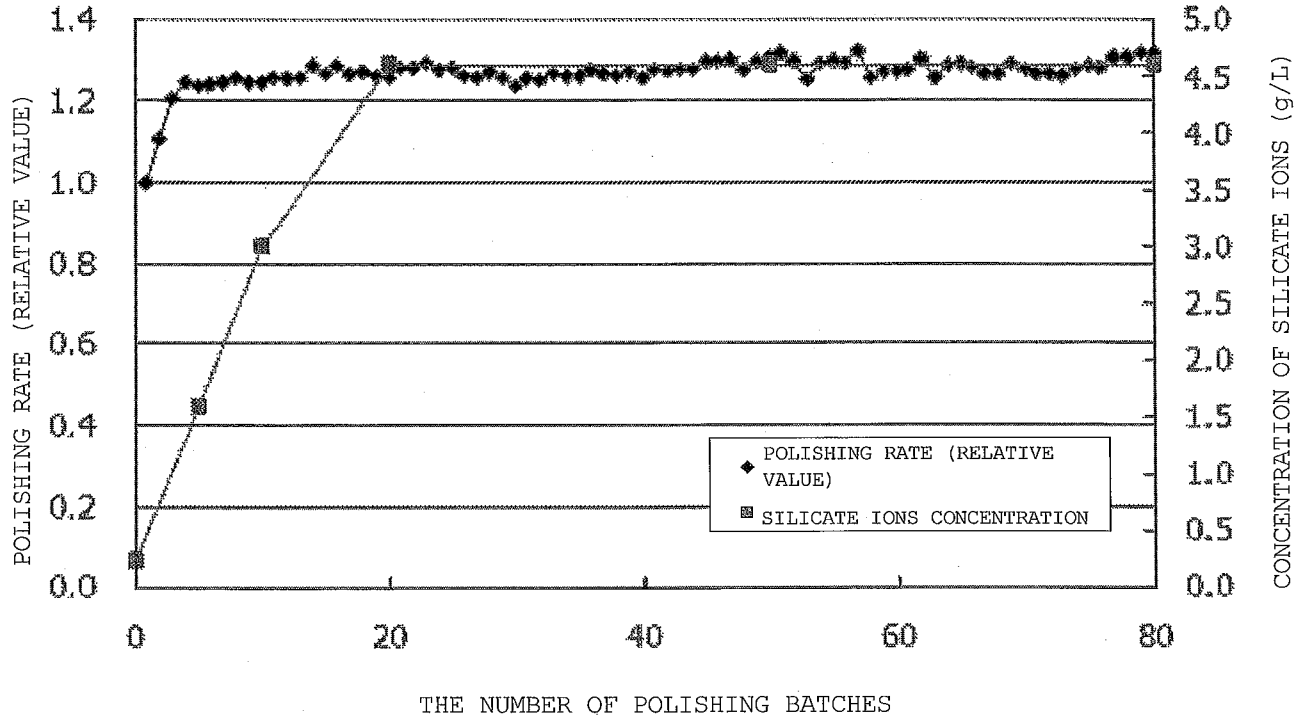
POLISHING RATE (RELATIVE VALUE)
CONCENTRATION OF SILICATE IONS (g/L)
POLISHING RATE (RELATIVE VALUE)
SILICATE IONS CONCENTRATION
THE NUMBER OF POLISHING BATCHES

FIG. 3

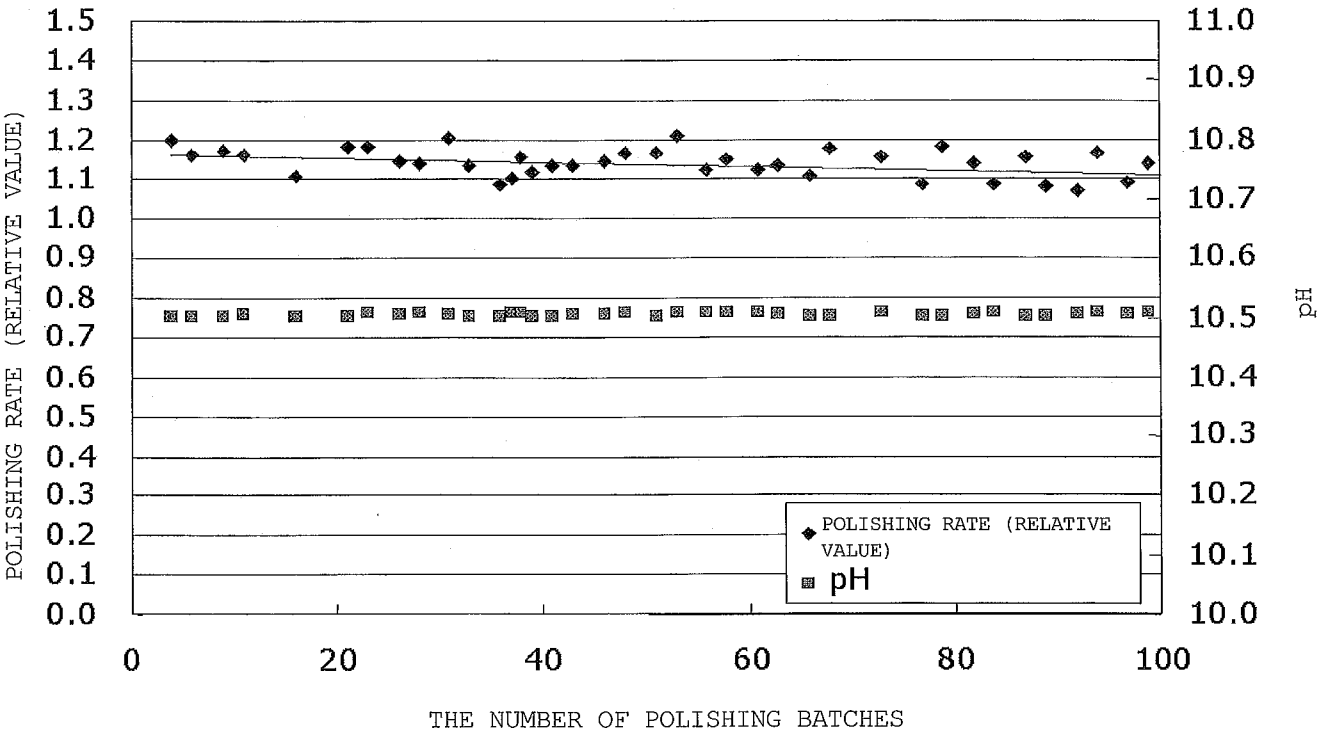
POLISHING RATE (RELATIVE VALUE)
pH
POLISHING RATE (RELATIVE VALUE)
pH
THE NUMBER OF POLISHING BATCHES