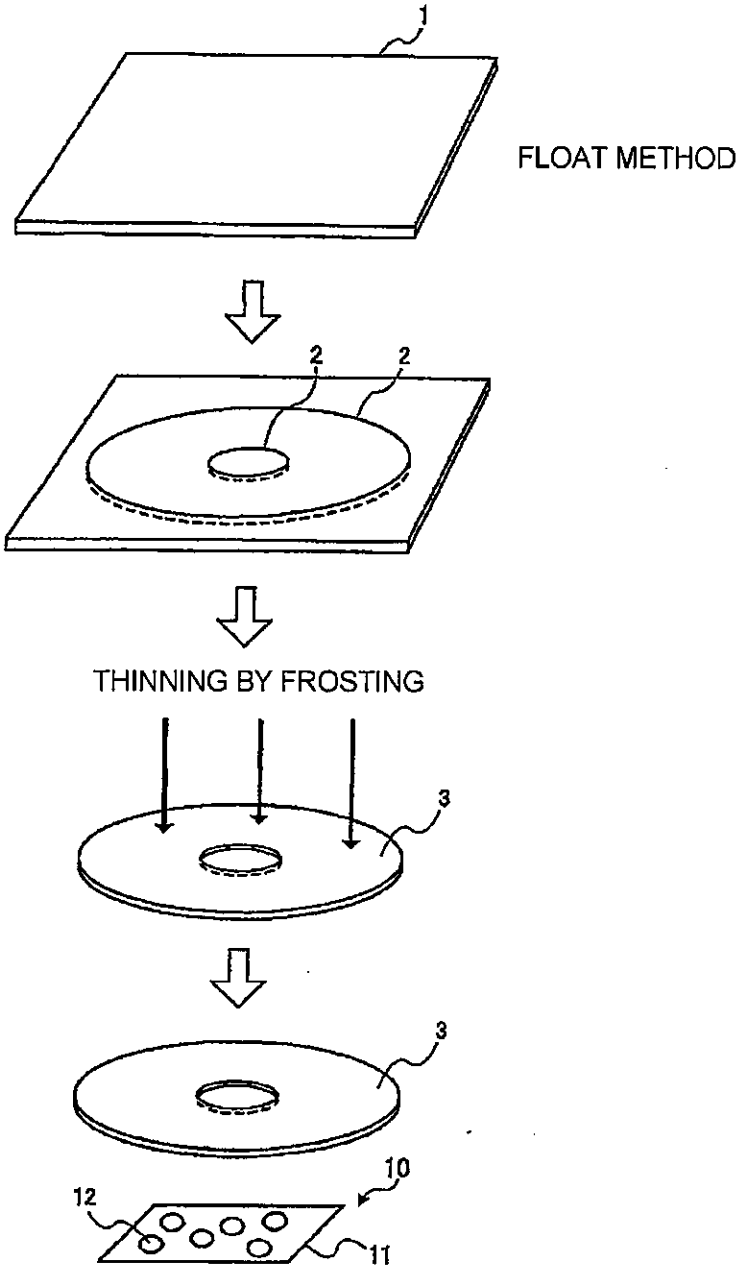

FIG. 1

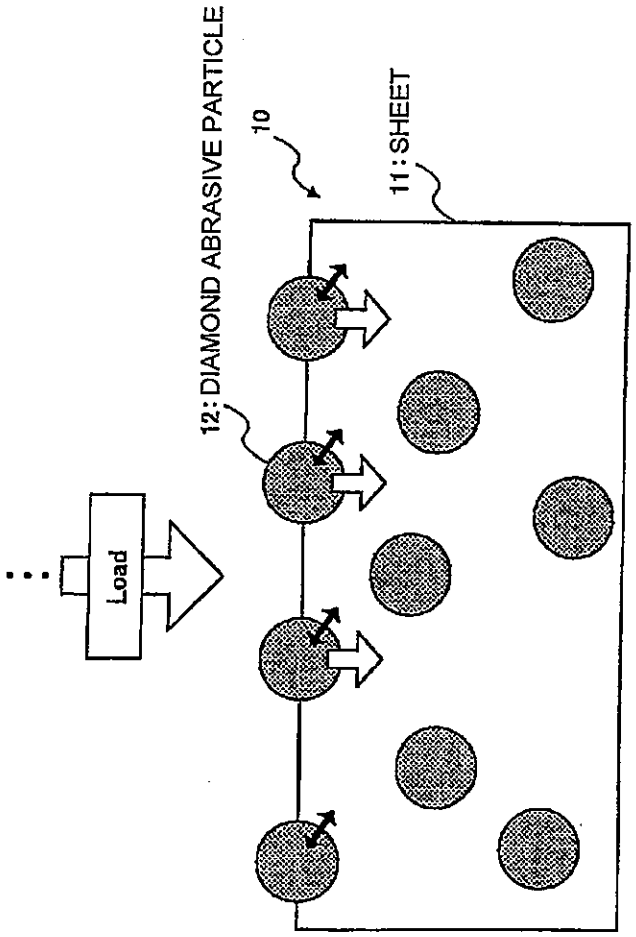

FIG. 2

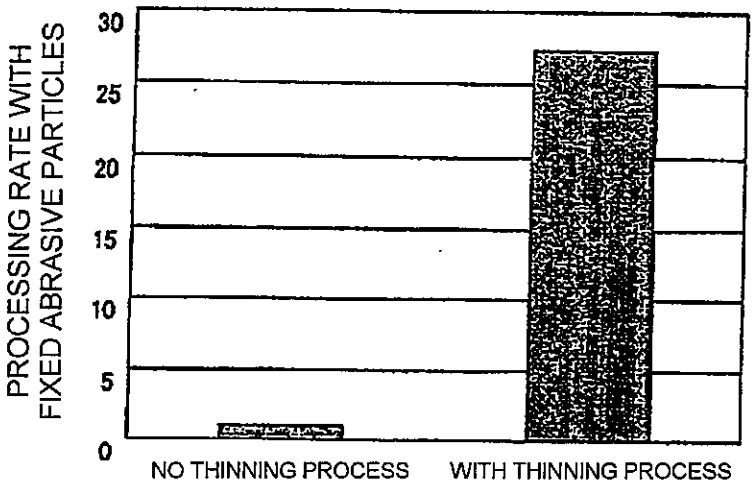
PROCESSING RATE WITH FIXED ABRASIVE PARTICLES
30
25
20
15
10
5
0
NO THINNING PROCESS
WITH THINNING PROCESS

FIG. 3

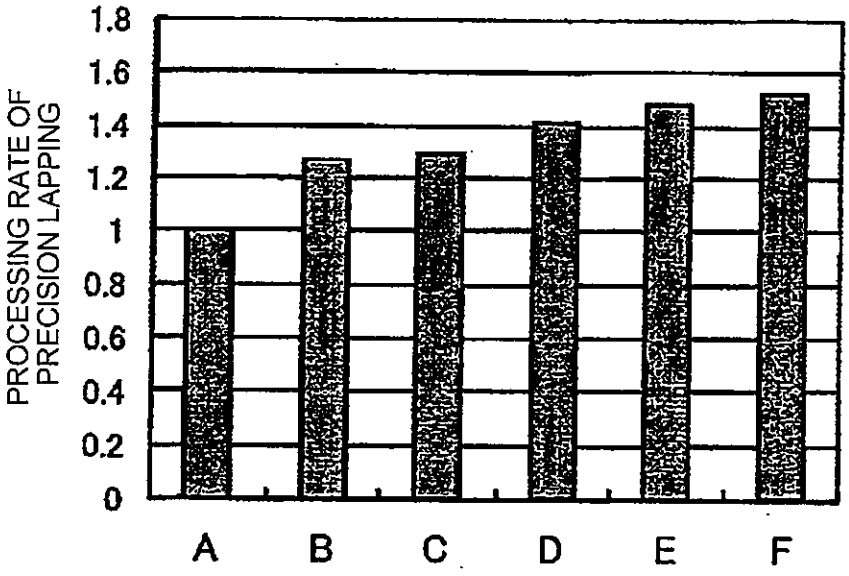
PROCESSING RATE OF PRECISION LAPPING
1.8
1.6
1.4
1.2
1
0.8
0.6
0.4
0.2
0
A
B
C
D
E
F

FIG. 4