


Fig. 1

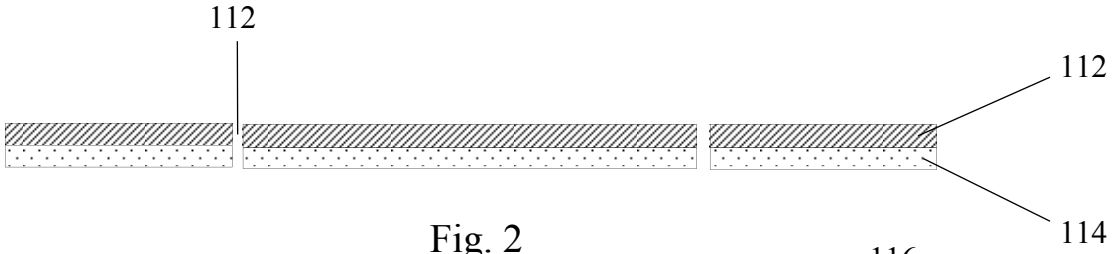


Fig. 2

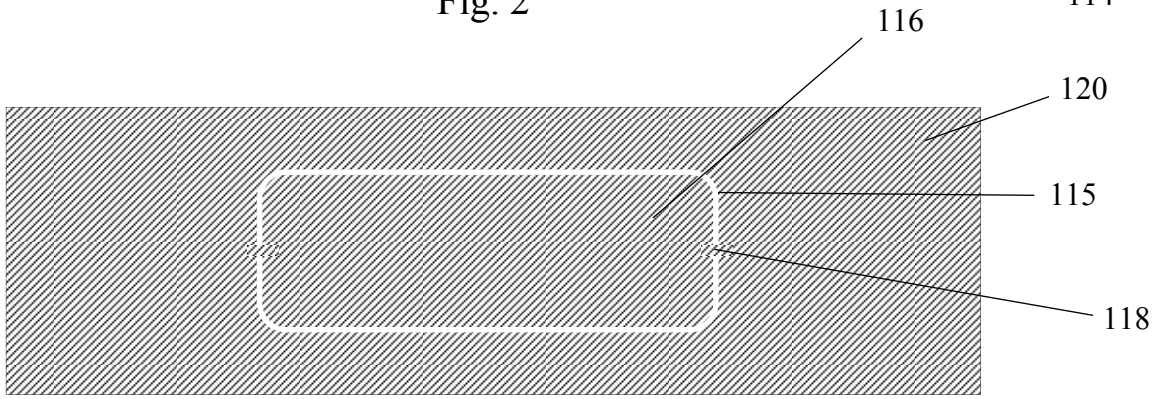


Fig. 3

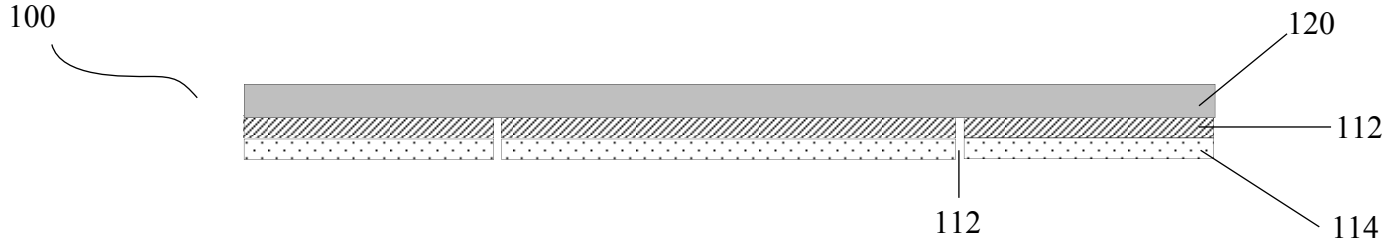


Fig. 4

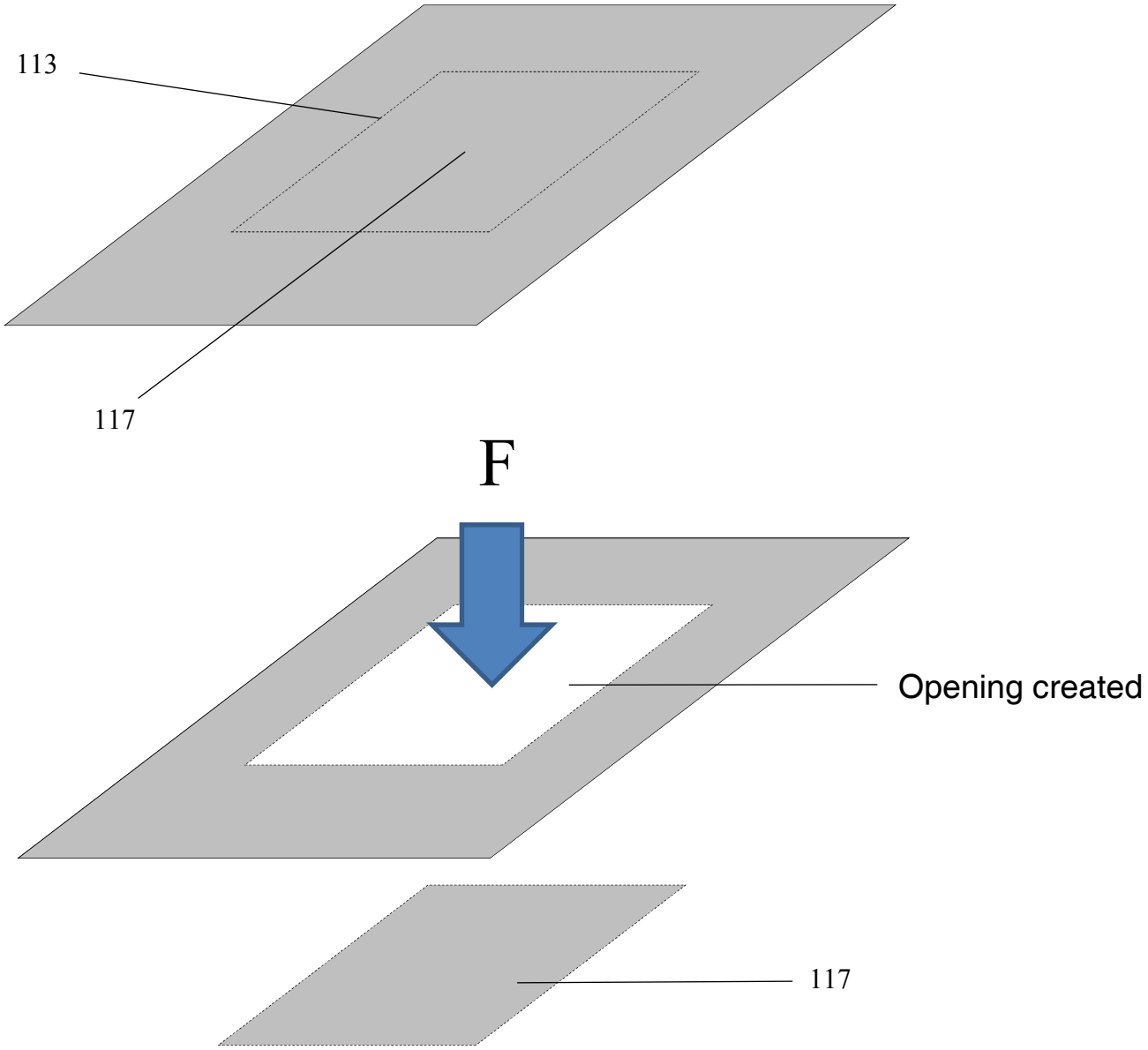


Fig. 5

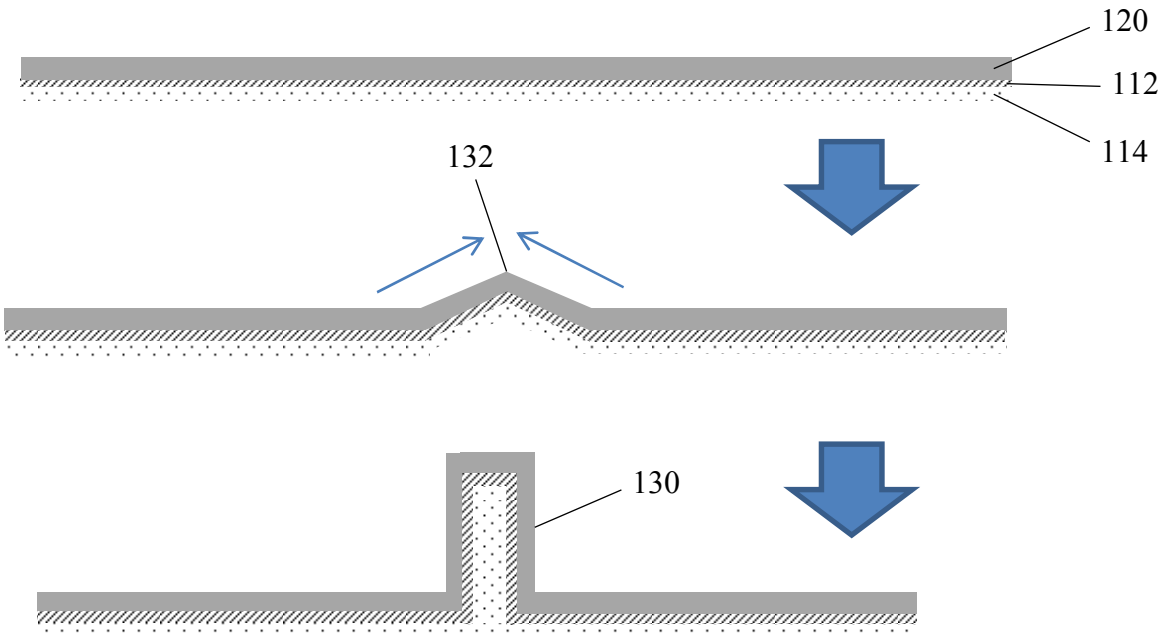


Fig. 6

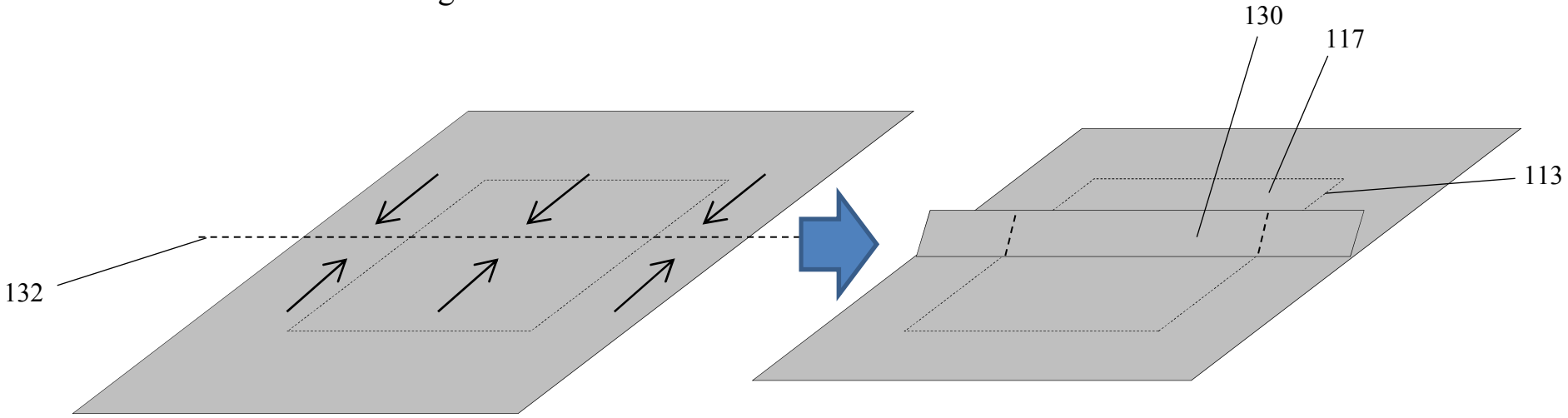


Fig. 7

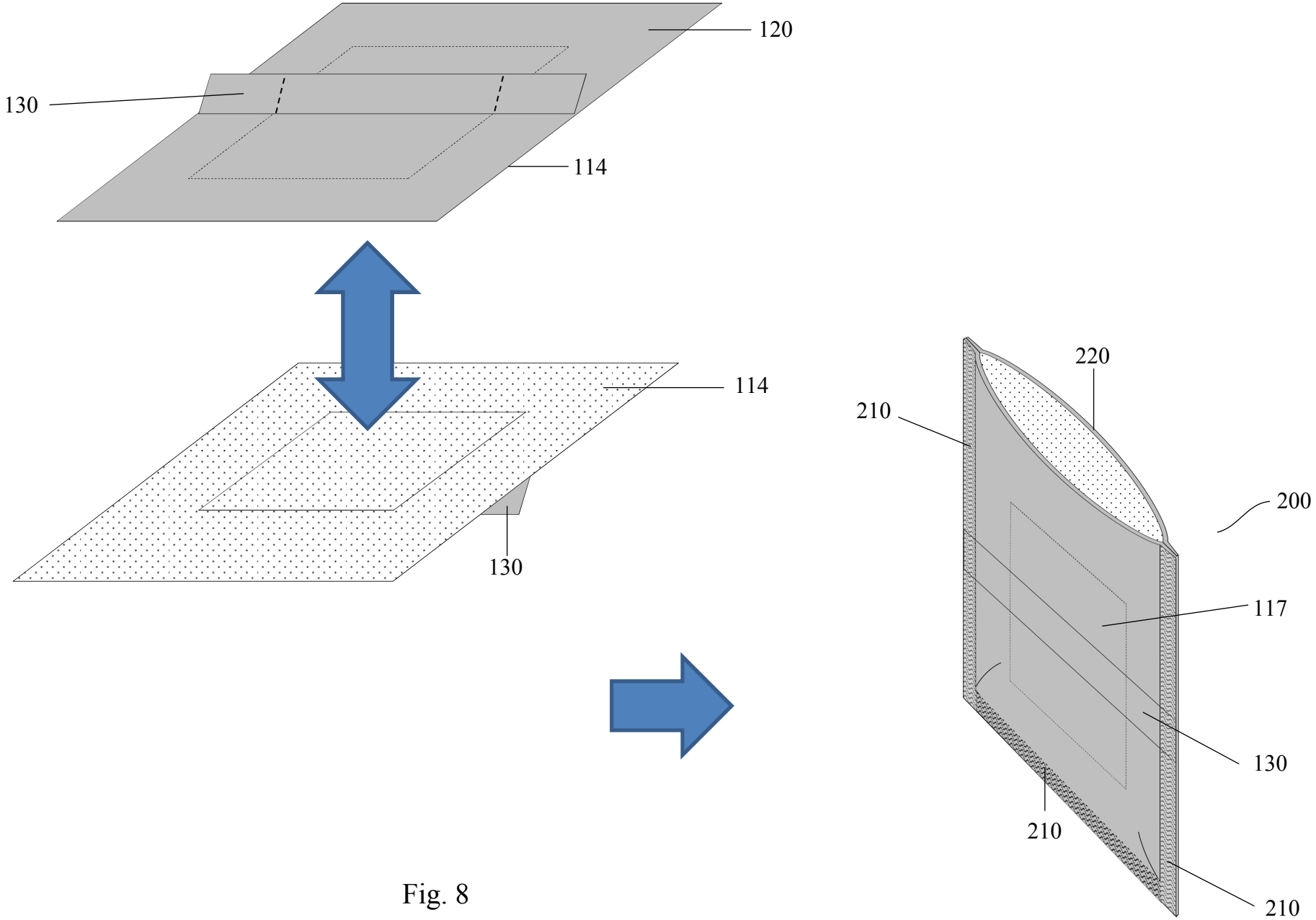


Fig. 8

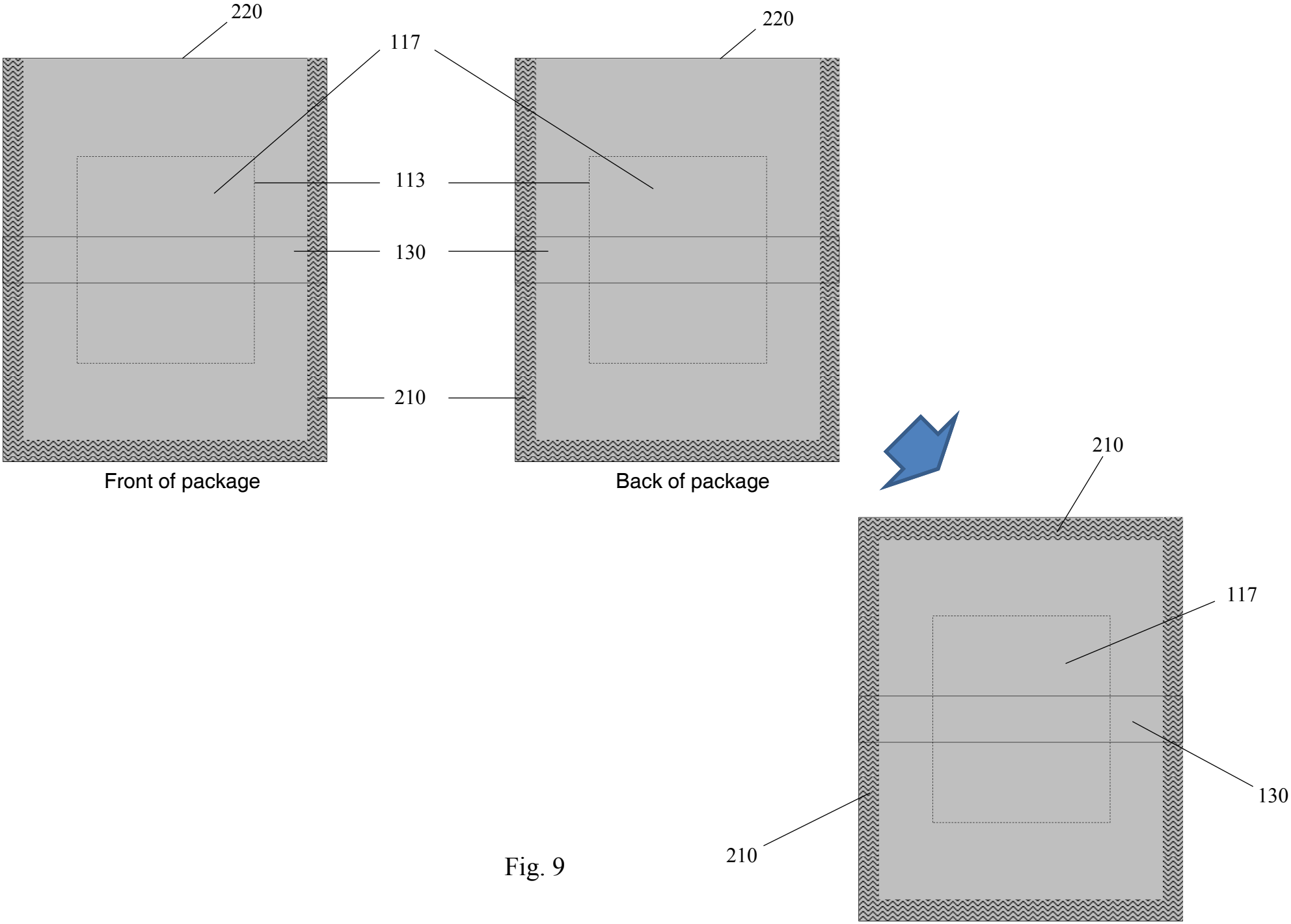
220
117
220
113
130
210
Front of package
Back of package
210
117
130
210

Fig. 9

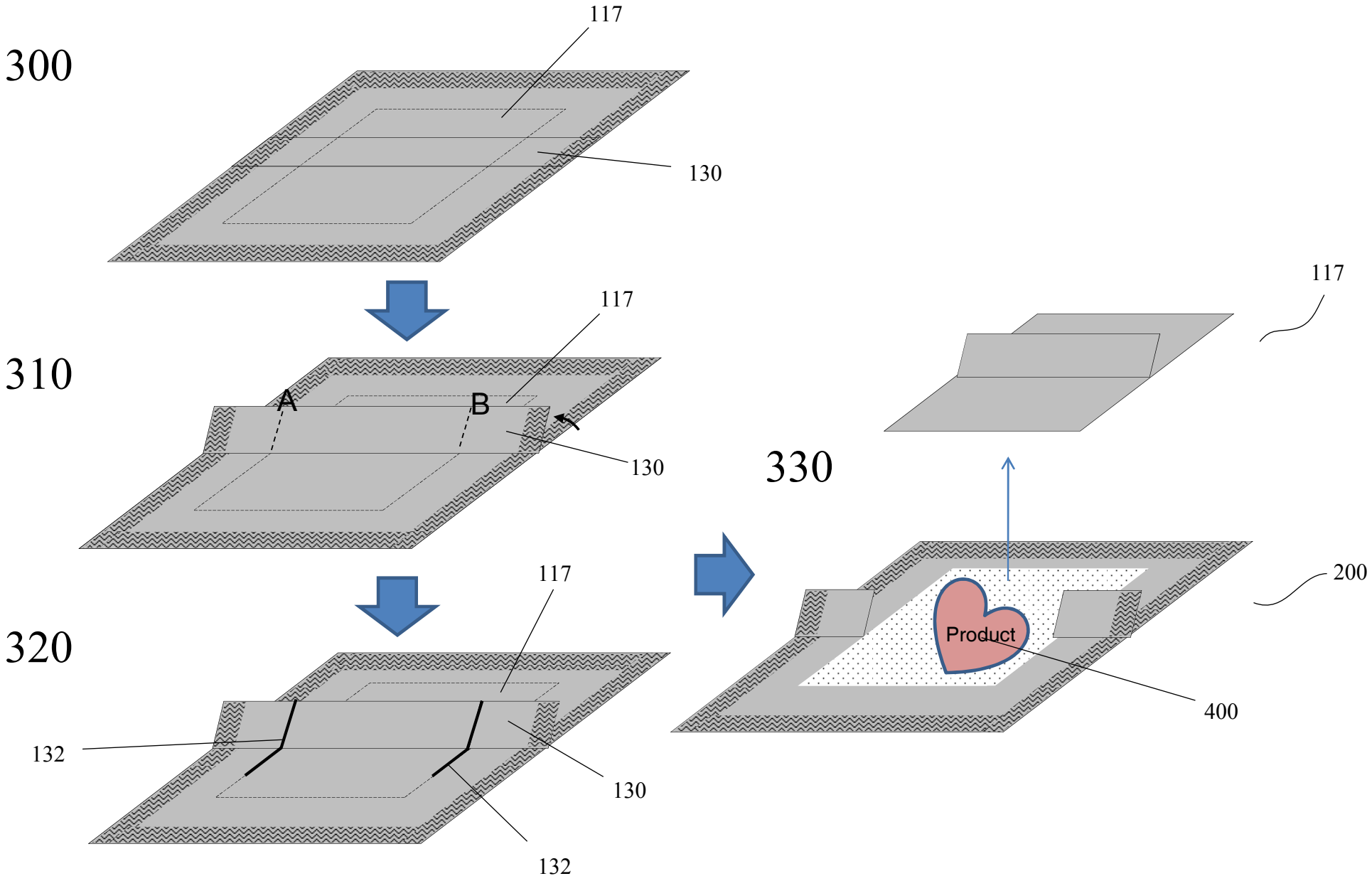
300
117
130
310
117
A
B
130
320
117
132
130
132
330
117
200
Product
400

Fig. 10

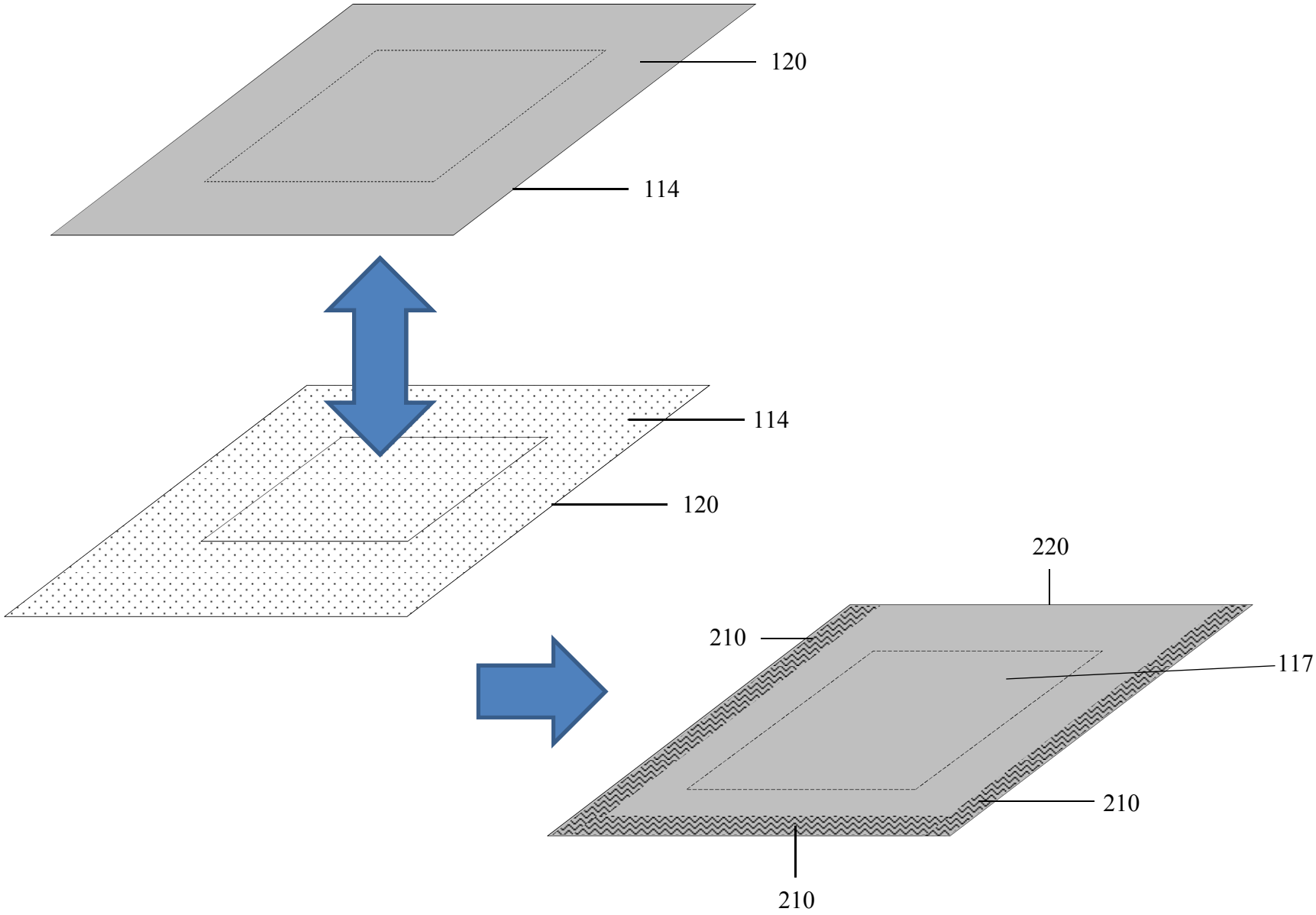


Fig. 11

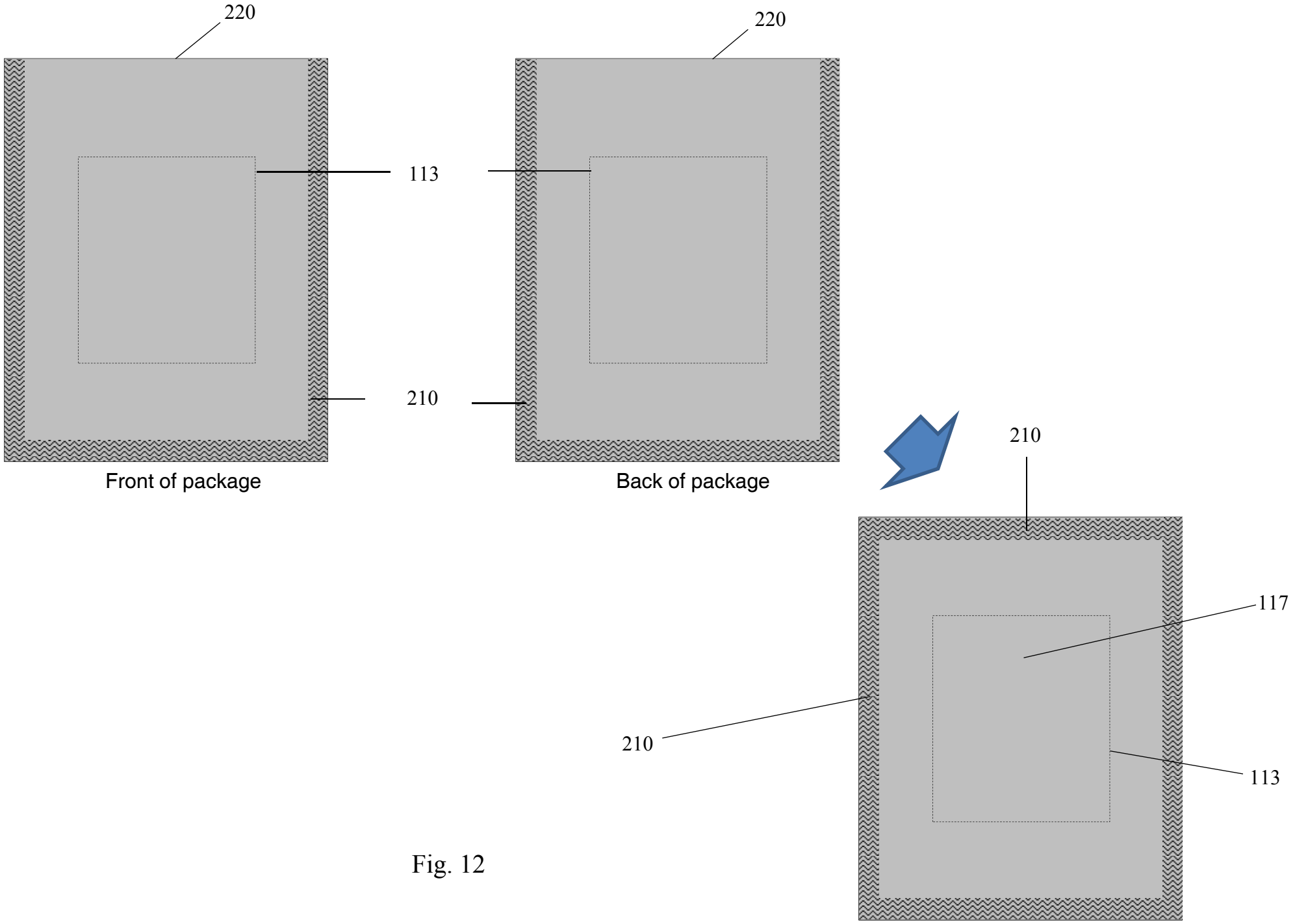
220
113
210
Front of package
220
Back of package
210
117
210
113

Fig. 12

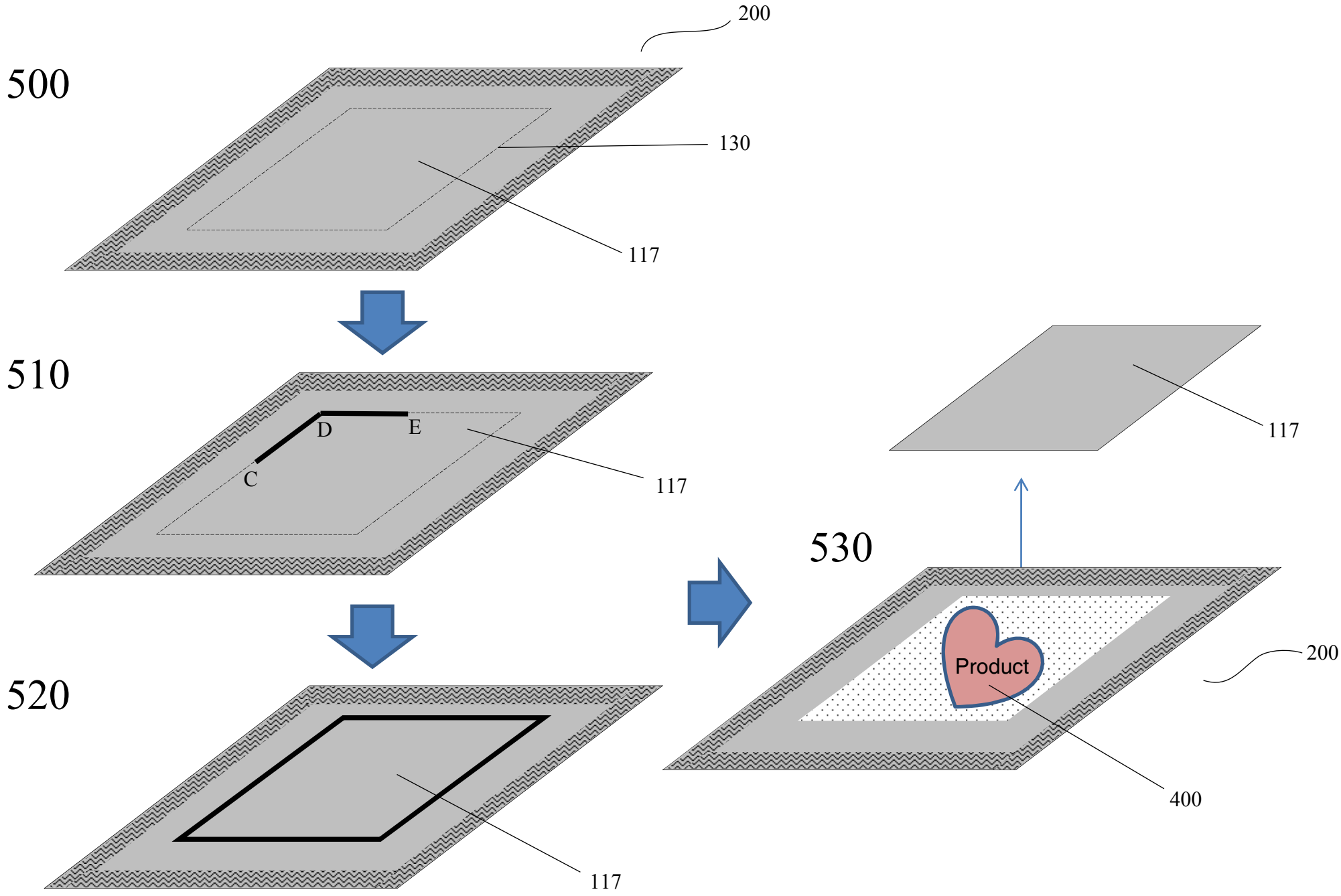


Fig. 13