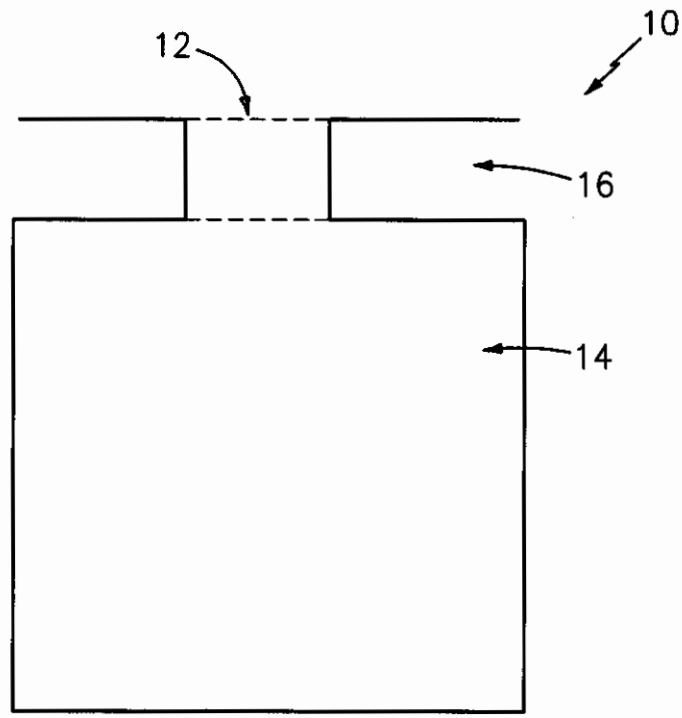

FIG. 1
(PRIOR ART)

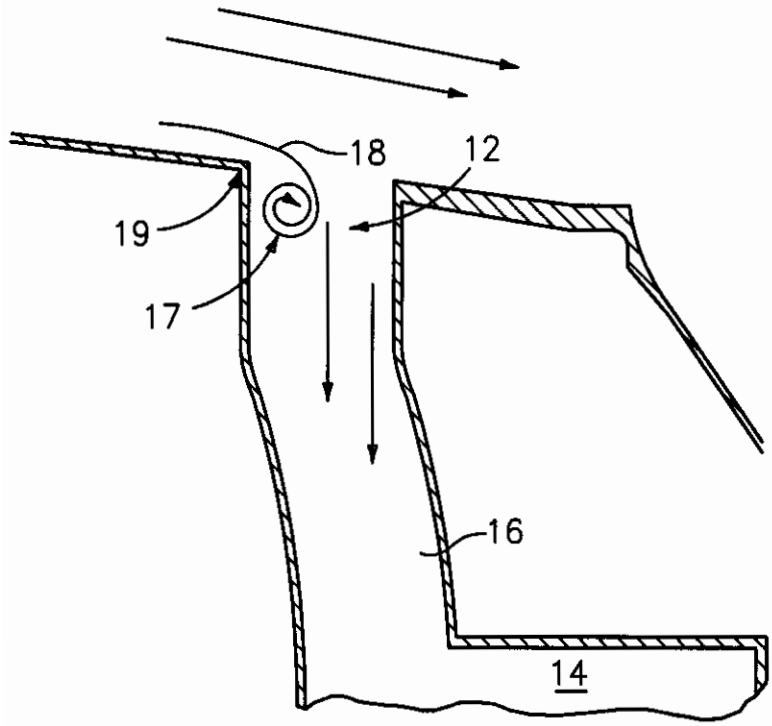

FIG. 2
(PRIOR ART)

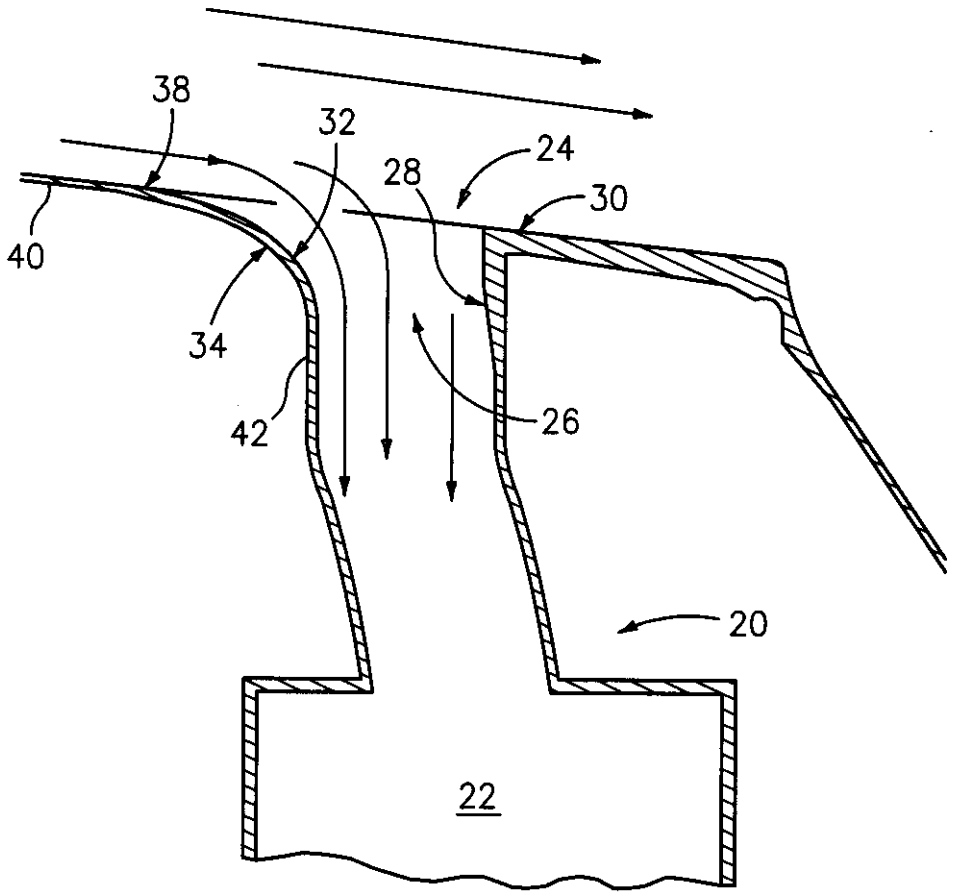

FIG. 3

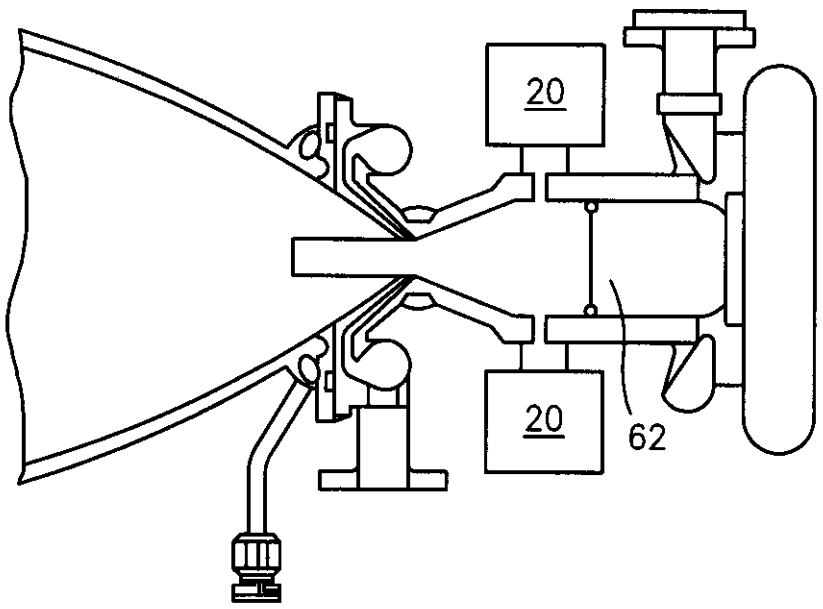

FIG. 9

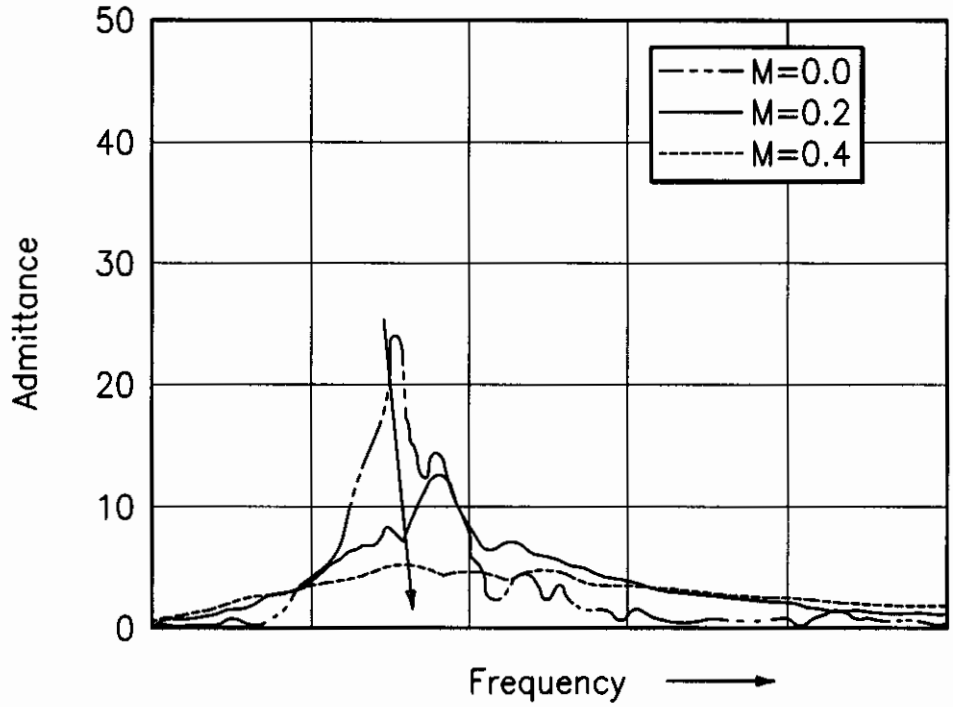
50
40
30
20
10
0
Admittance
M=0.0
M=0.2
M=0.4
Frequency

FIG. 4

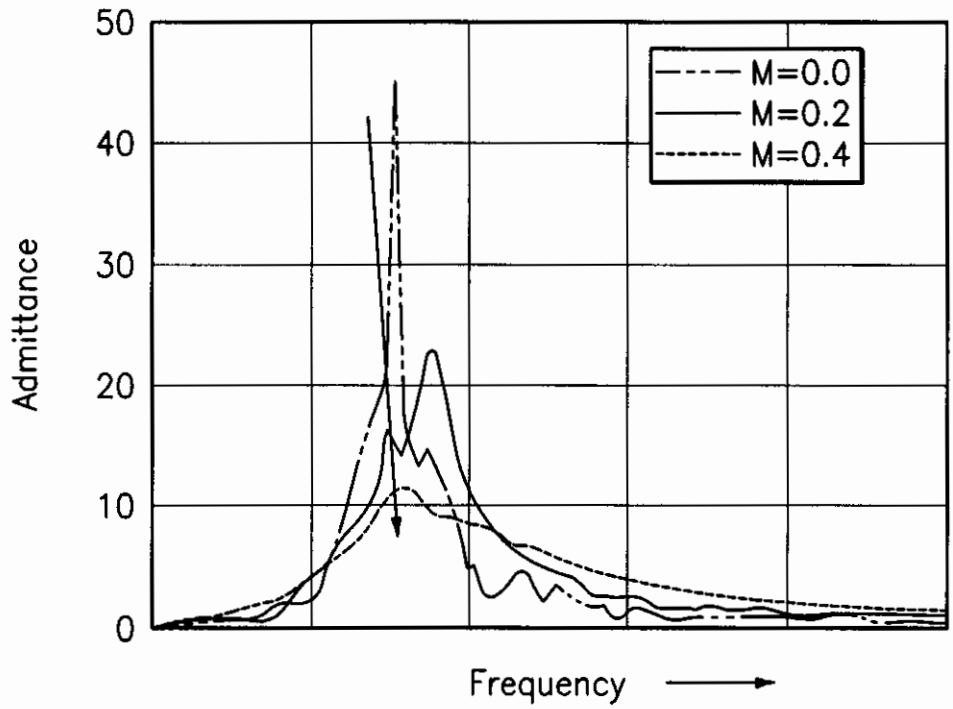
50
40
30
20
10
0
Admittance
M=0.0
M=0.2
M=0.4
Frequency

FIG. 5

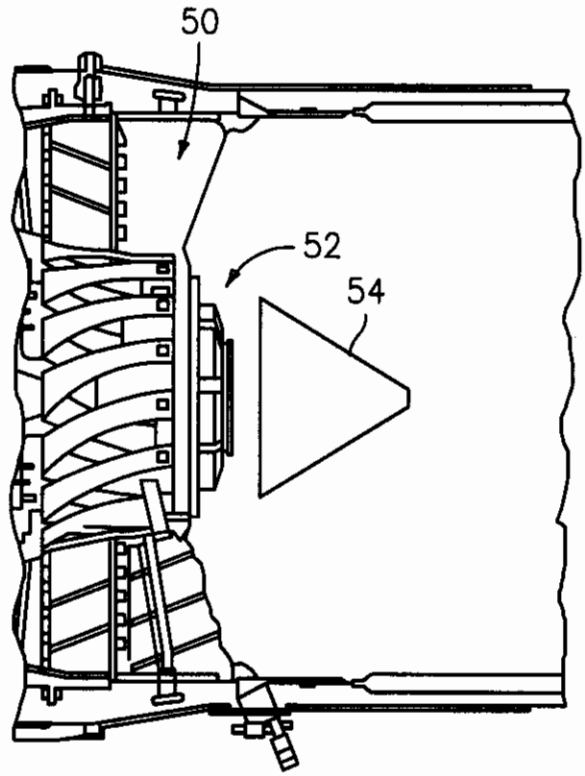

FIG. 6

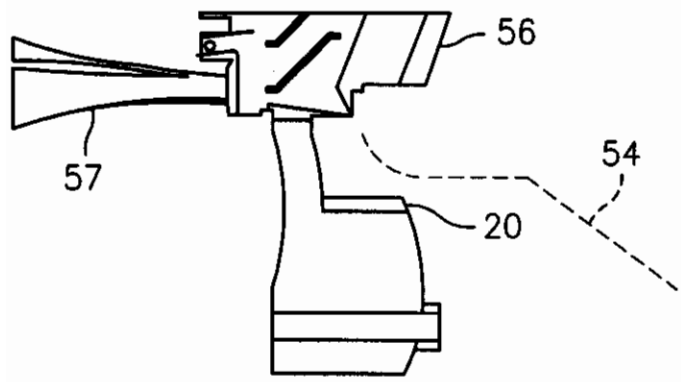

FIG. 7

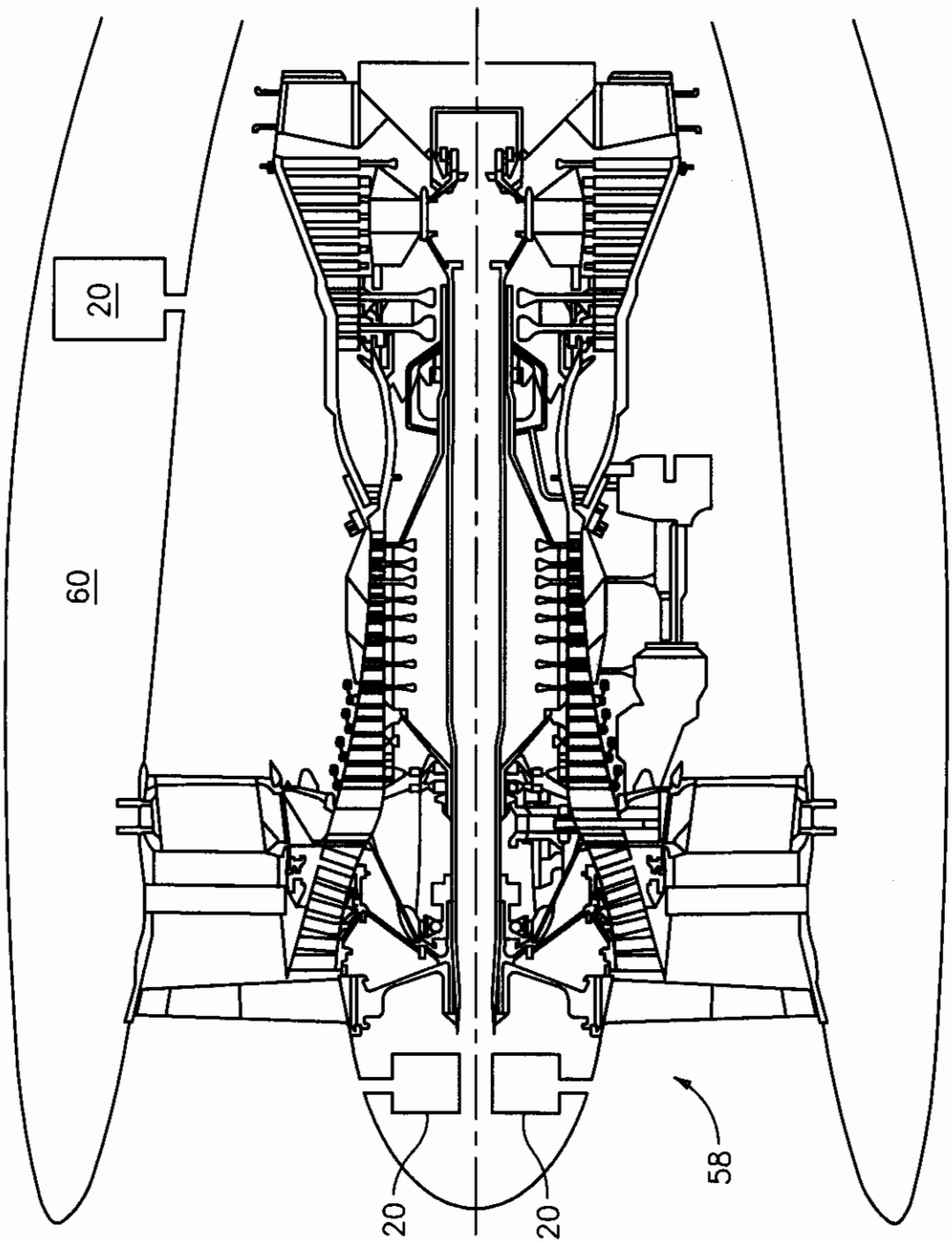

FIG. 8