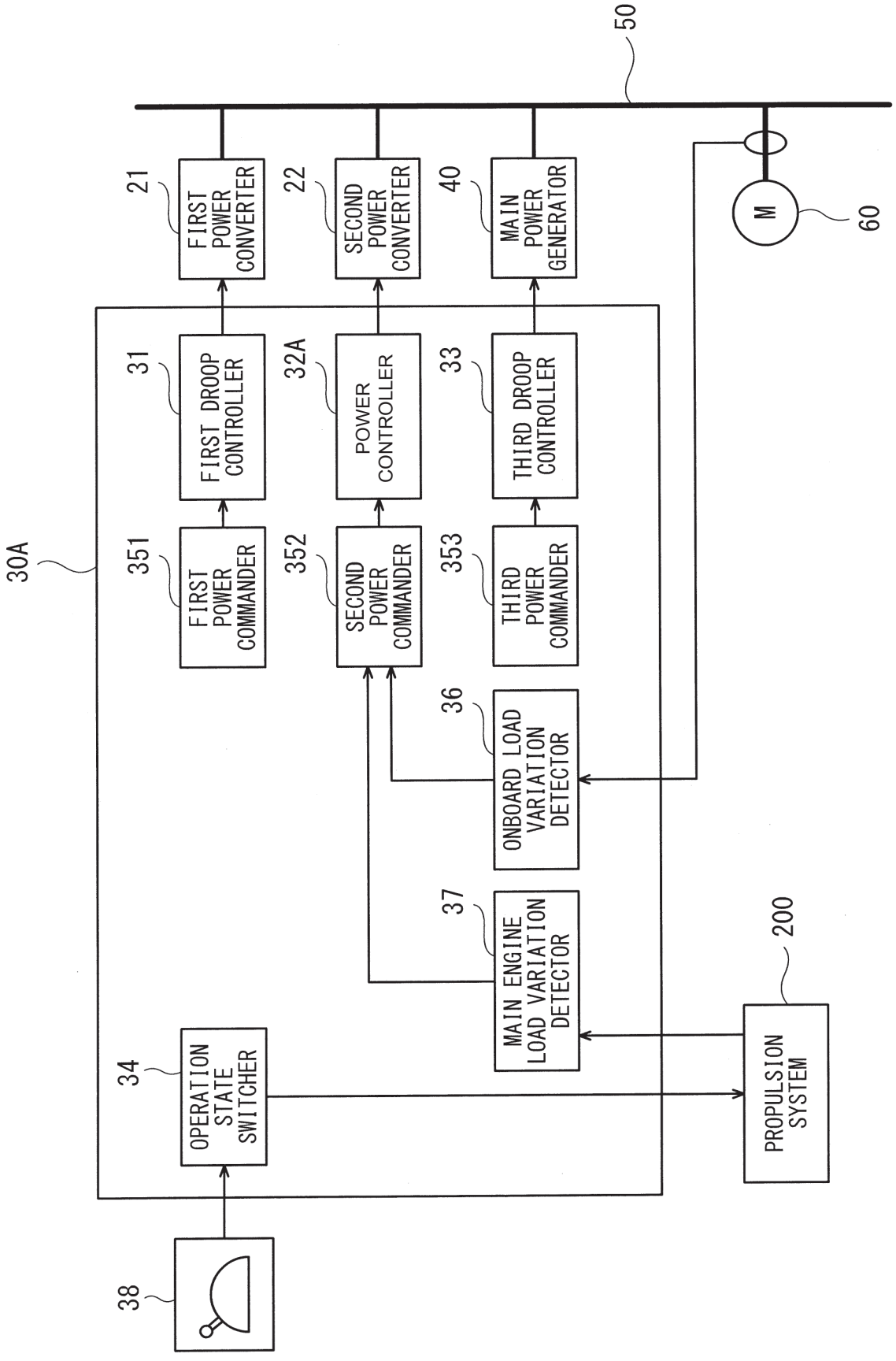
50
21
FIRST POWER CONVERTER
22
SECOND POWER CONVERTER
40
MAIN POWER GENERATOR
M
60
30A
31
FIRST DROOP CONTROLLER
32A
POWER CONTROLLER
33
THIRD DROOP CONTROLLER
351
FIRST POWER COMMANDER
352
SECOND POWER COMMANDER
353
THIRD POWER COMMANDER
36
ONBOARD LOAD VARIATION DETECTOR
37
MAIN ENGINE LOAD VARIATION DETECTOR
200
PROPULSION SYSTEM
34
OPERATION STATE SWITCHER
38

Fig. 5