FIG. 6

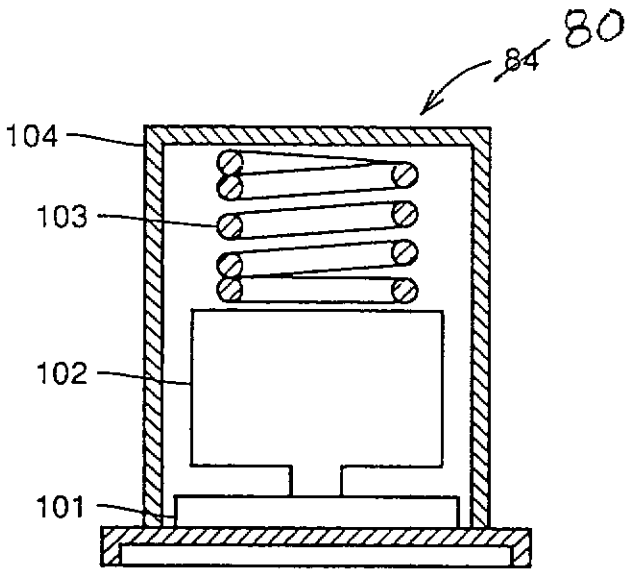
80
84
104
103
102
101

FIG. 7

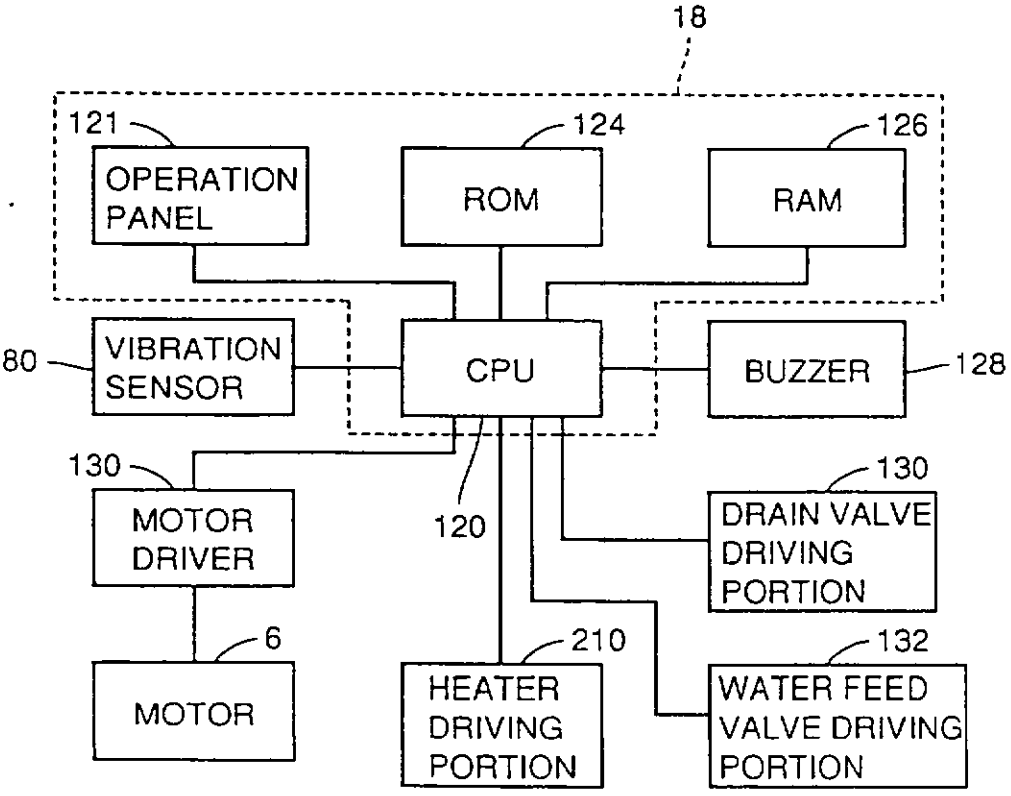
18
121
OPERATION PANEL
124
ROM
126
RAM
80
VIBRATION SENSOR
CPU
BUZZER
128
130
MOTOR DRIVER
120
130
DRAIN VALVE DRIVING PORTION
6
MOTOR
210
HEATER DRIVING PORTION
132
WATER FEED VALVE DRIVING PORTION