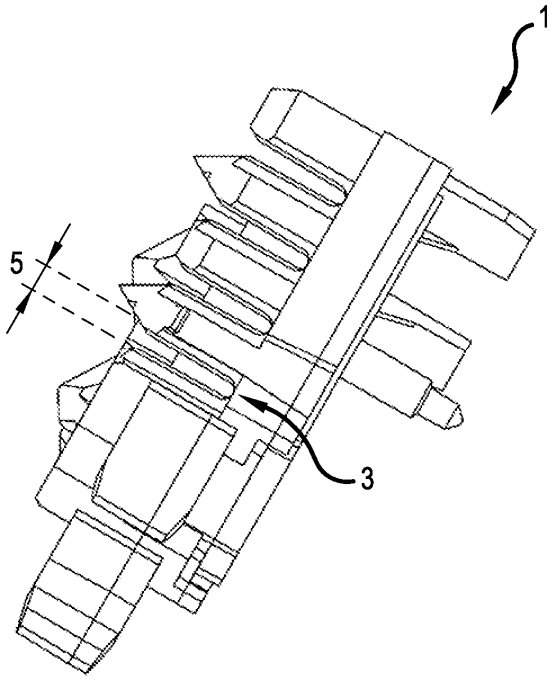

FIG.1A
PRIOR ART

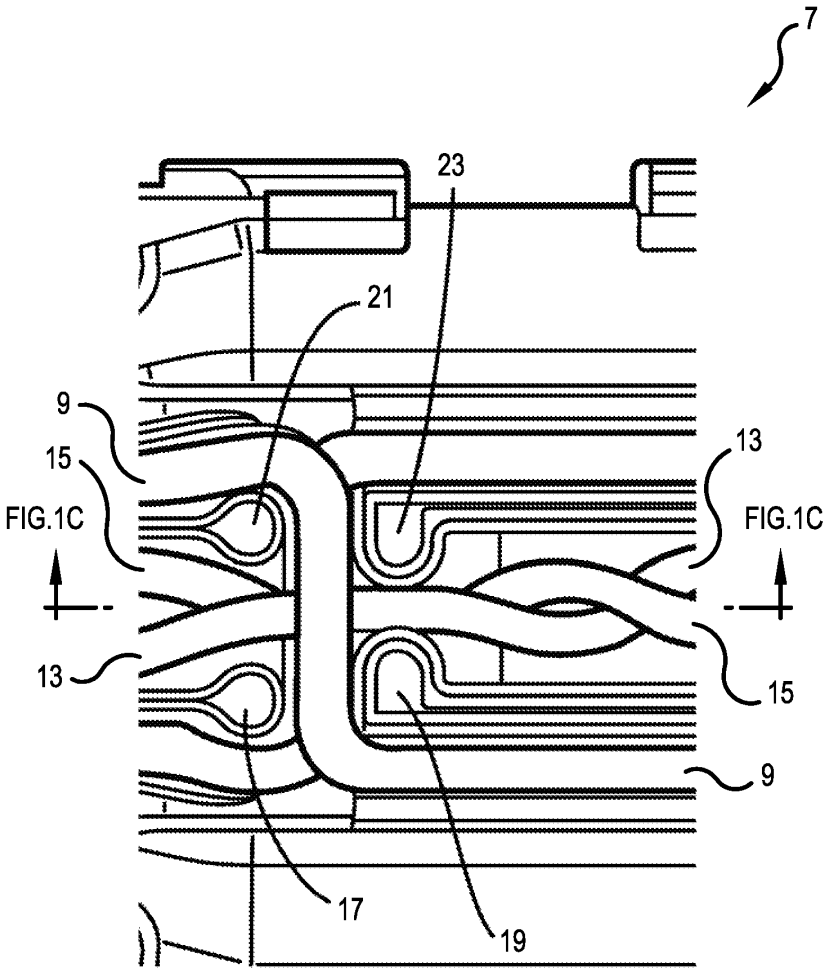

FIG.1B
PRIOR ART

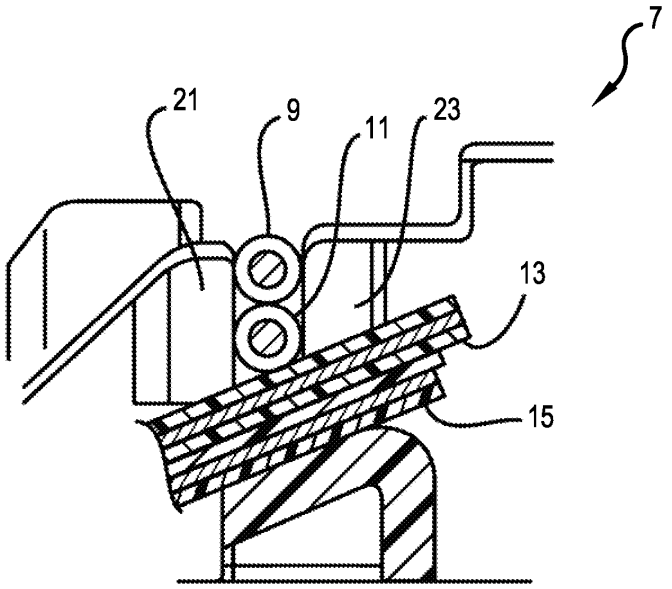

FIG.1C
PRIOR ART

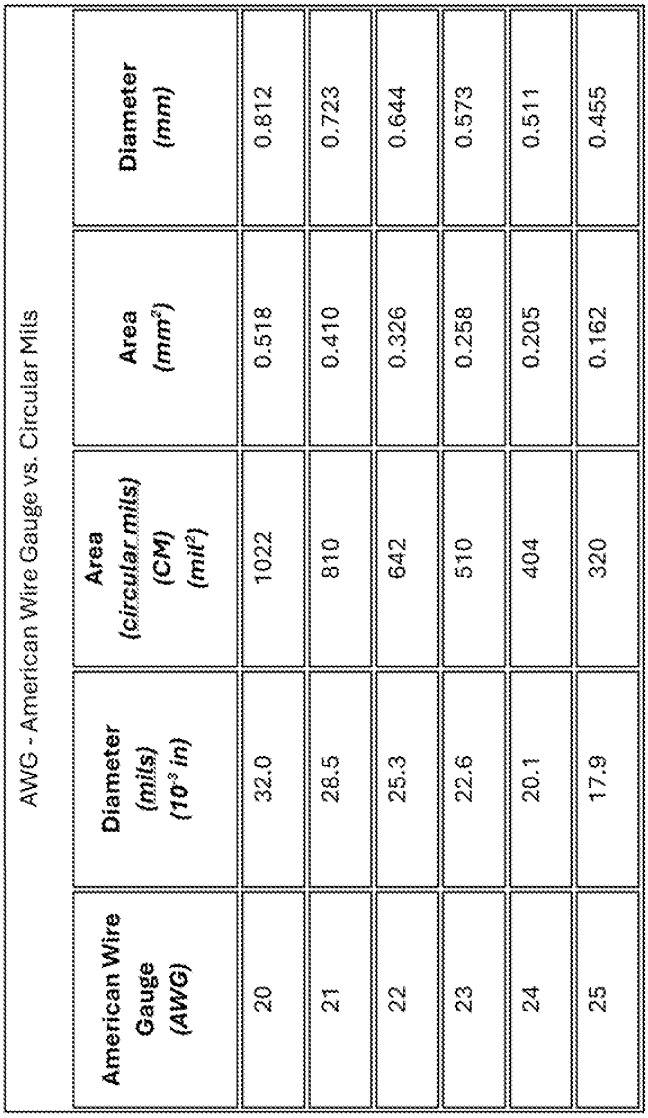

AWG - American Wire Gauge vs. Circular Mils

American Wire Gauge (AWG)	Diameter (mils) (10^{-3} in)	Area (circular mils) (CM) (mil^2)	Area (mm^2)	Diameter (mm)
20	32.0	1022	0.518	0.812
21	28.5	810	0.410	0.723
22	25.3	642	0.326	0.644
23	22.6	510	0.258	0.573
24	20.1	404	0.205	0.511
25	17.9	320	0.162	0.455

FIG.2
PRIOR ART

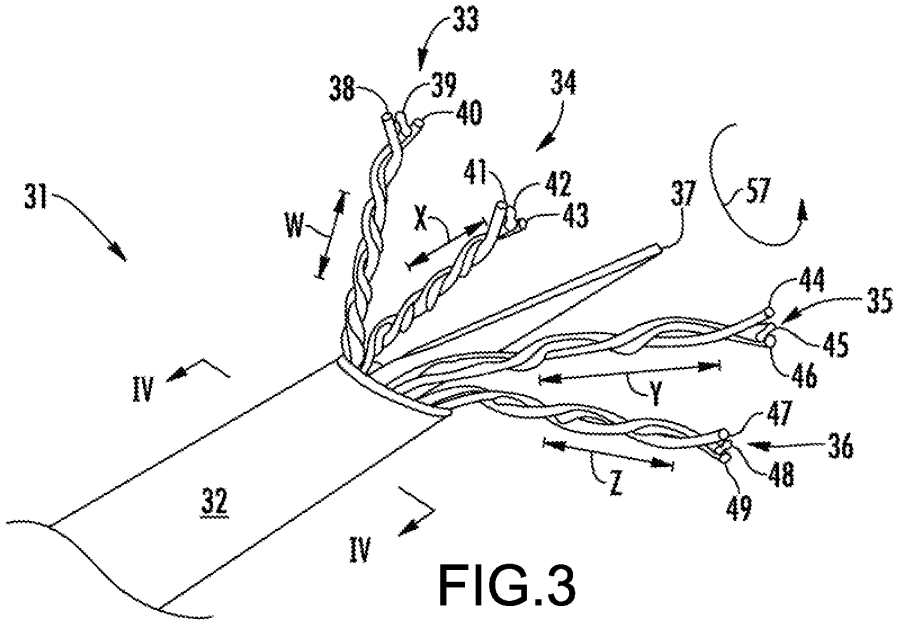
33
38
39
40
34
41
42
43
31
W
X
37
57
44
35
45
46
IV
Y
47
36
48
Z
49
32
IV

FIG.3

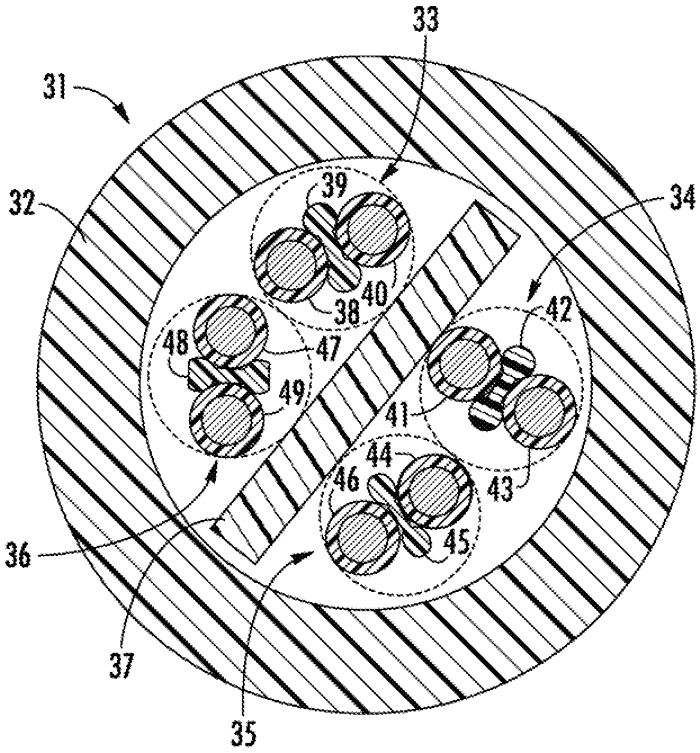
33
31
32
39
34
40
38
42
48
47
49
41
44
46
43
45
36
37
35

FIG.4

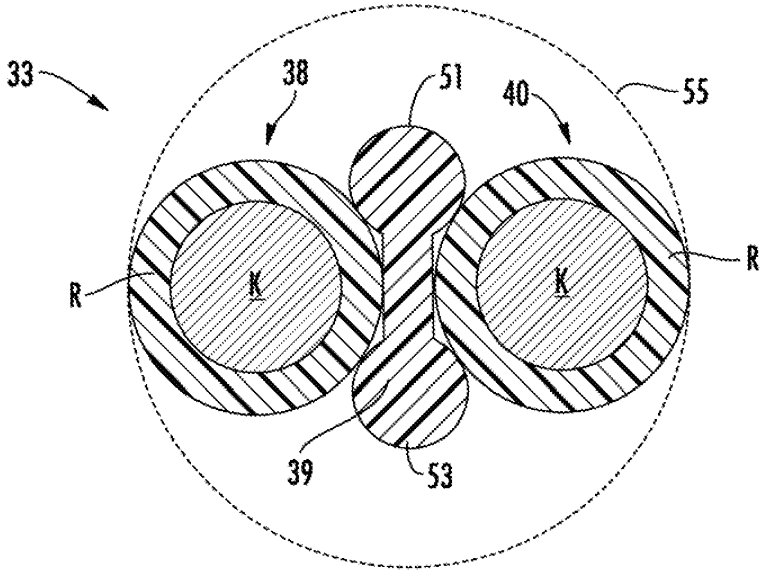

FIG.5

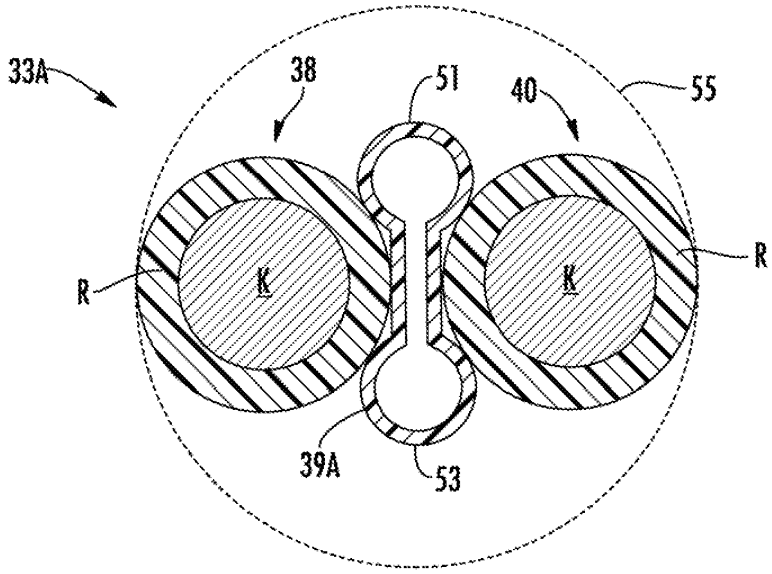

FIG.5A

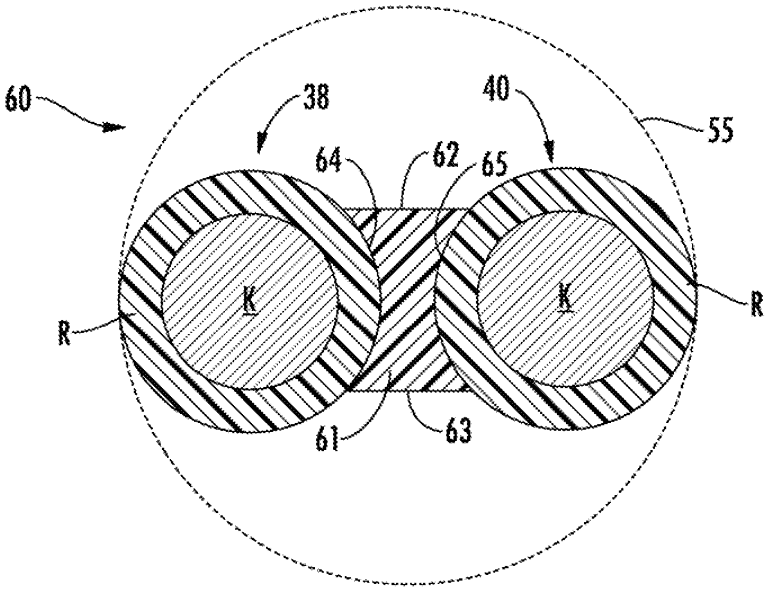

FIG.6

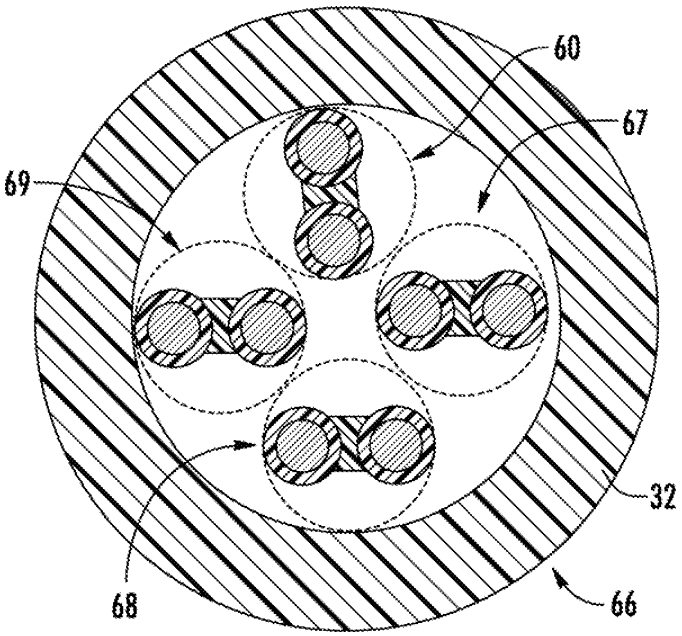

FIG.7

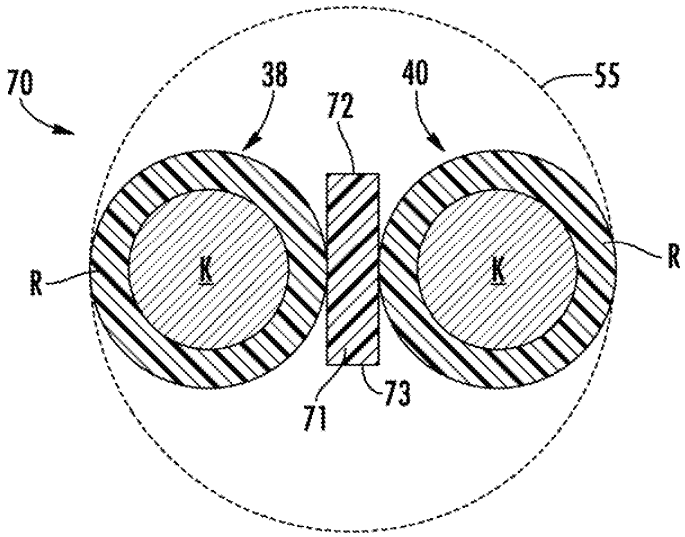

FIG.8

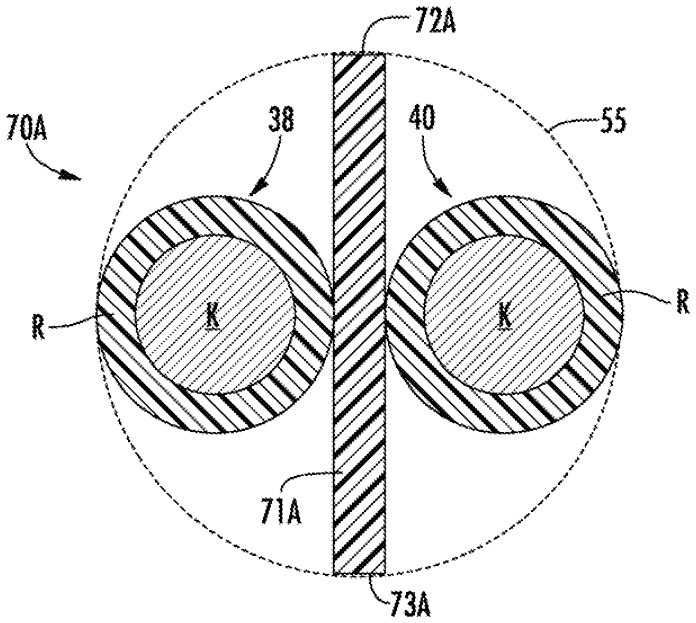

FIG.8A

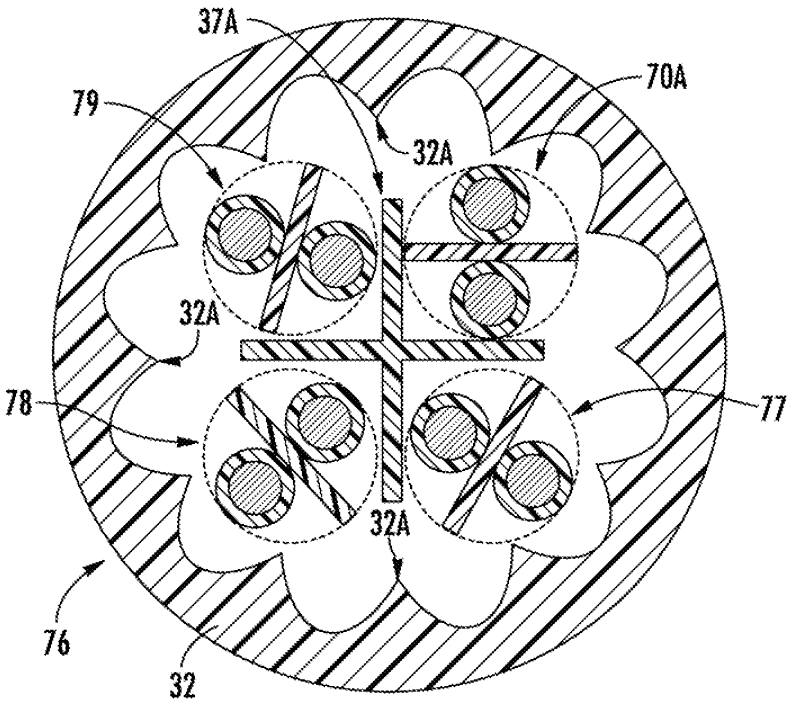

FIG.8B

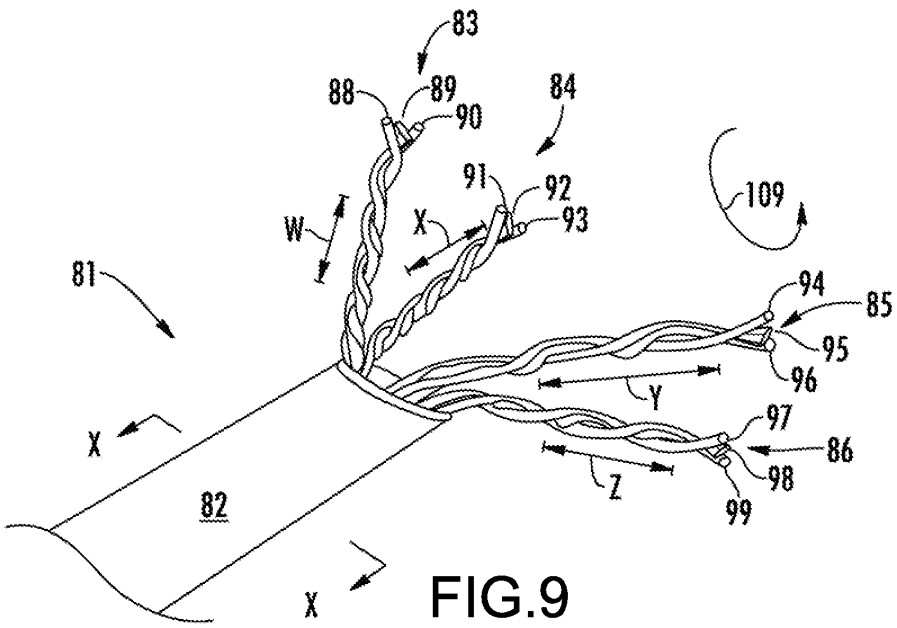
83
88
89
90
84
91
92
93
109
W
X
81
94
85
95
96
Y
97
86
98
Z
99
X
82
X

FIG.9

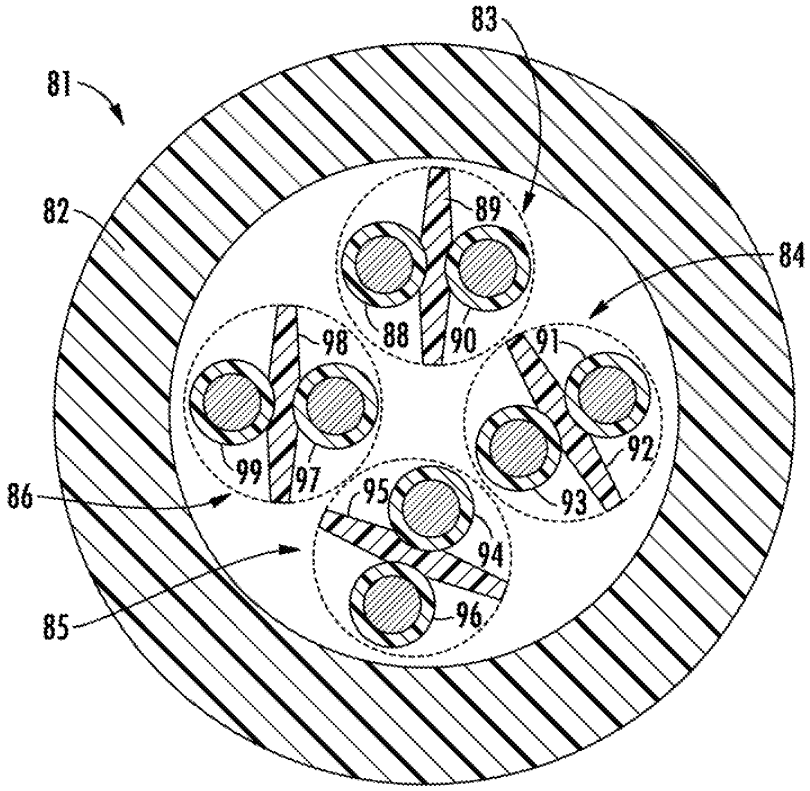
83
81
82
89
84
88
90
98
91
99
97
92
86
95
93
94
85
96

FIG.10

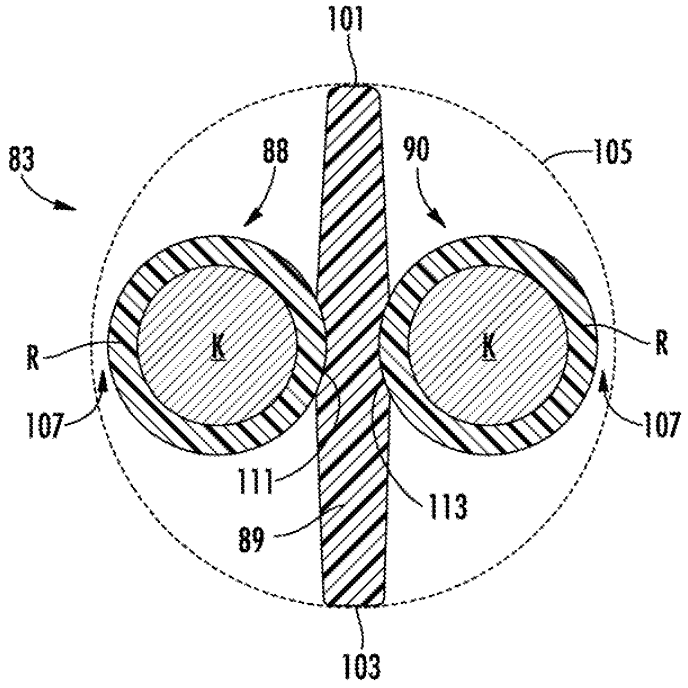
101
83
88
90
105
K
K
R
R
107
107
111
113
89
103

FIG.11

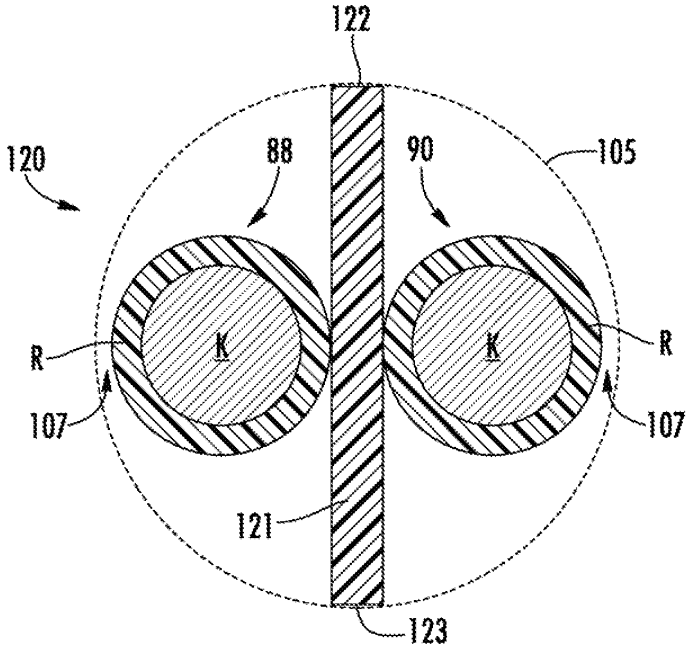
122
120
88
90
105
K
K
R
R
107
107
121
123

FIG.12