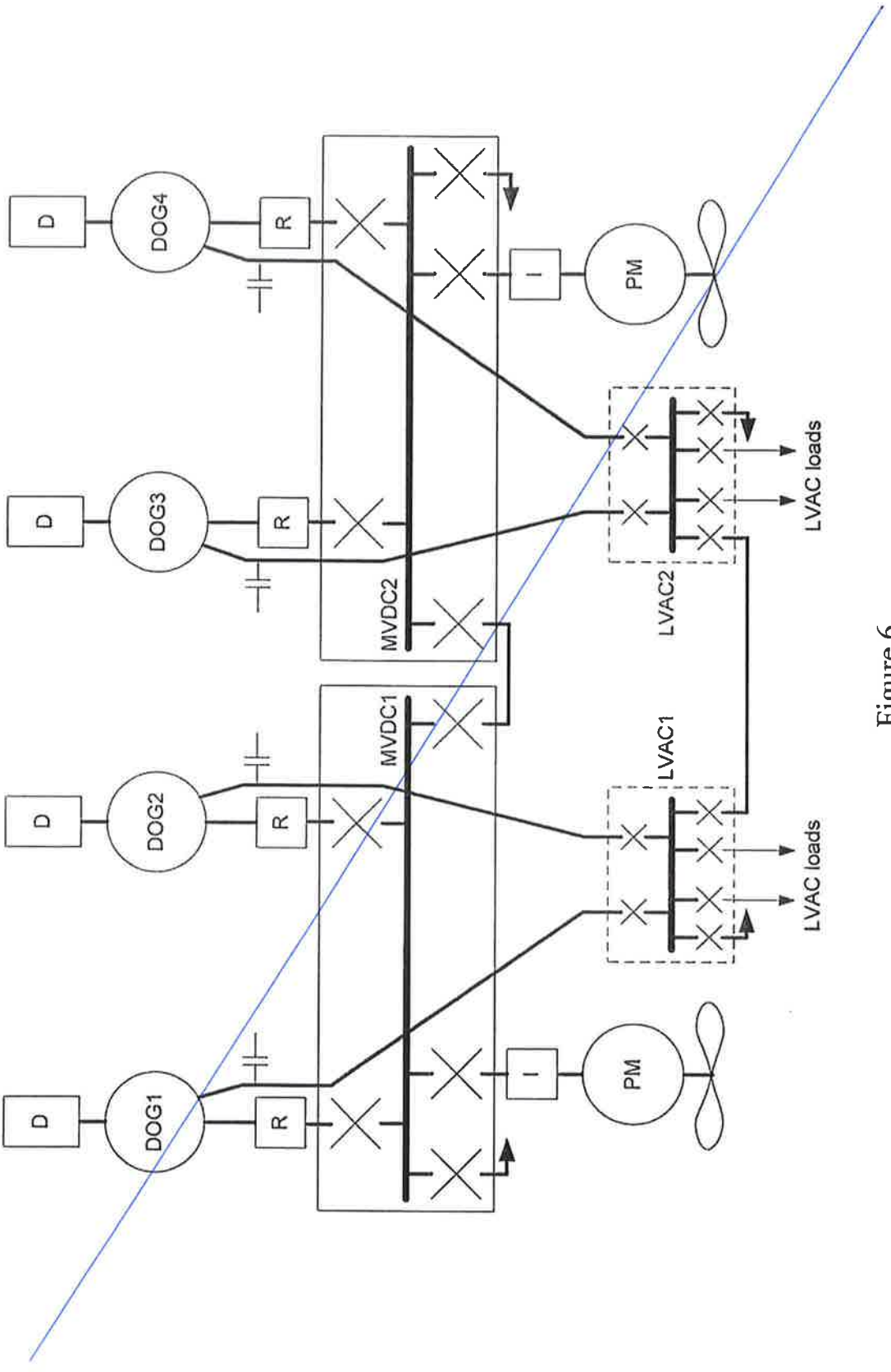
D
DOG4
R
D
DOG3
R
MVDC2
D
DOG2
R
MVDC1
D
DOG1
R
PM
PM
LVAC2
LVAC1
LVAC loads
LVAC loads

Figure 6

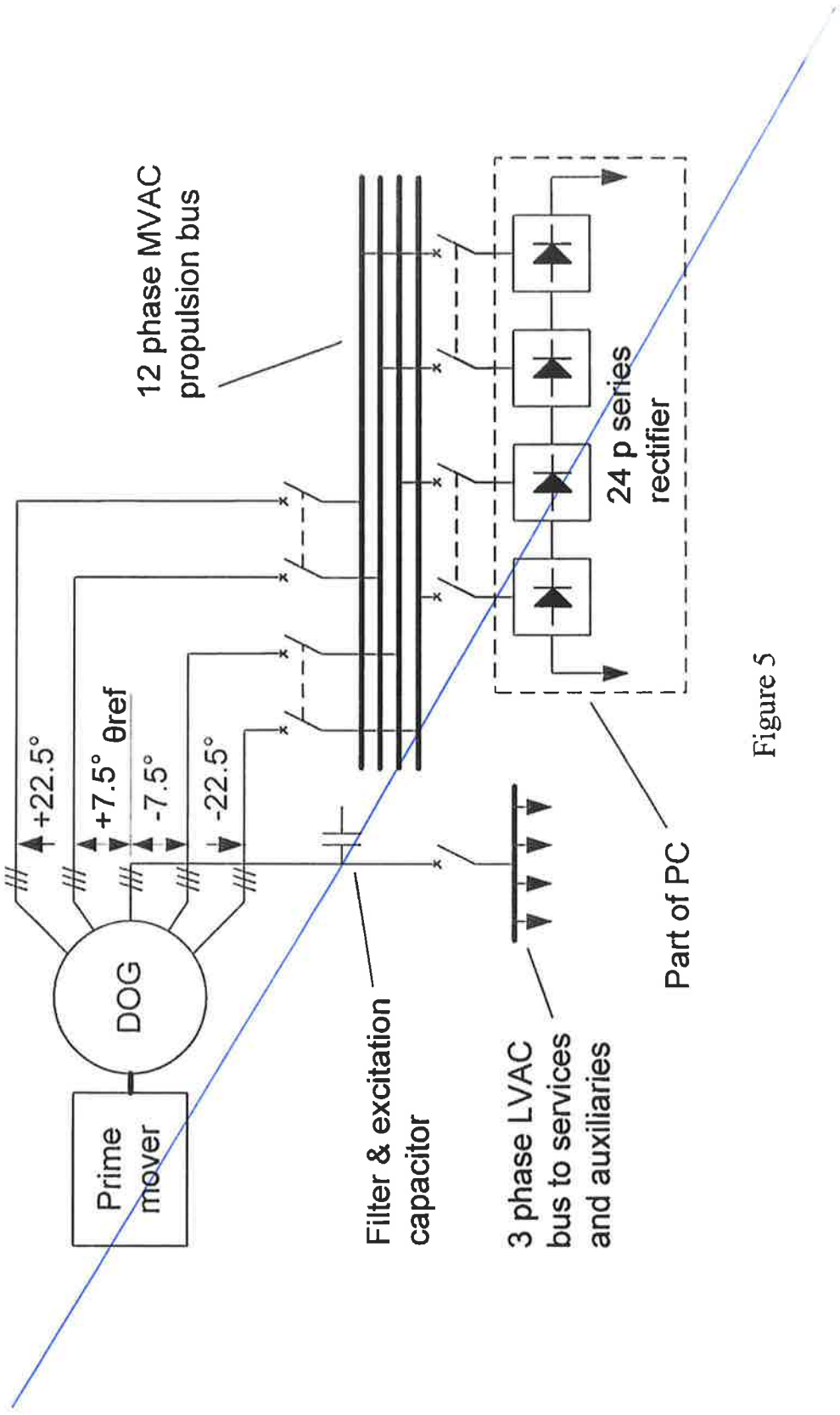
12 phase MVAC
propulsion bus
+22.5°
+7.5°
θref
-7.5°
-22.5°
DOG
Prime
mover
Filter & excitation
capacitor
3 phase LVAC
bus to services
and auxiliaries
24 p series
rectifier
Part of PC

Figure 5

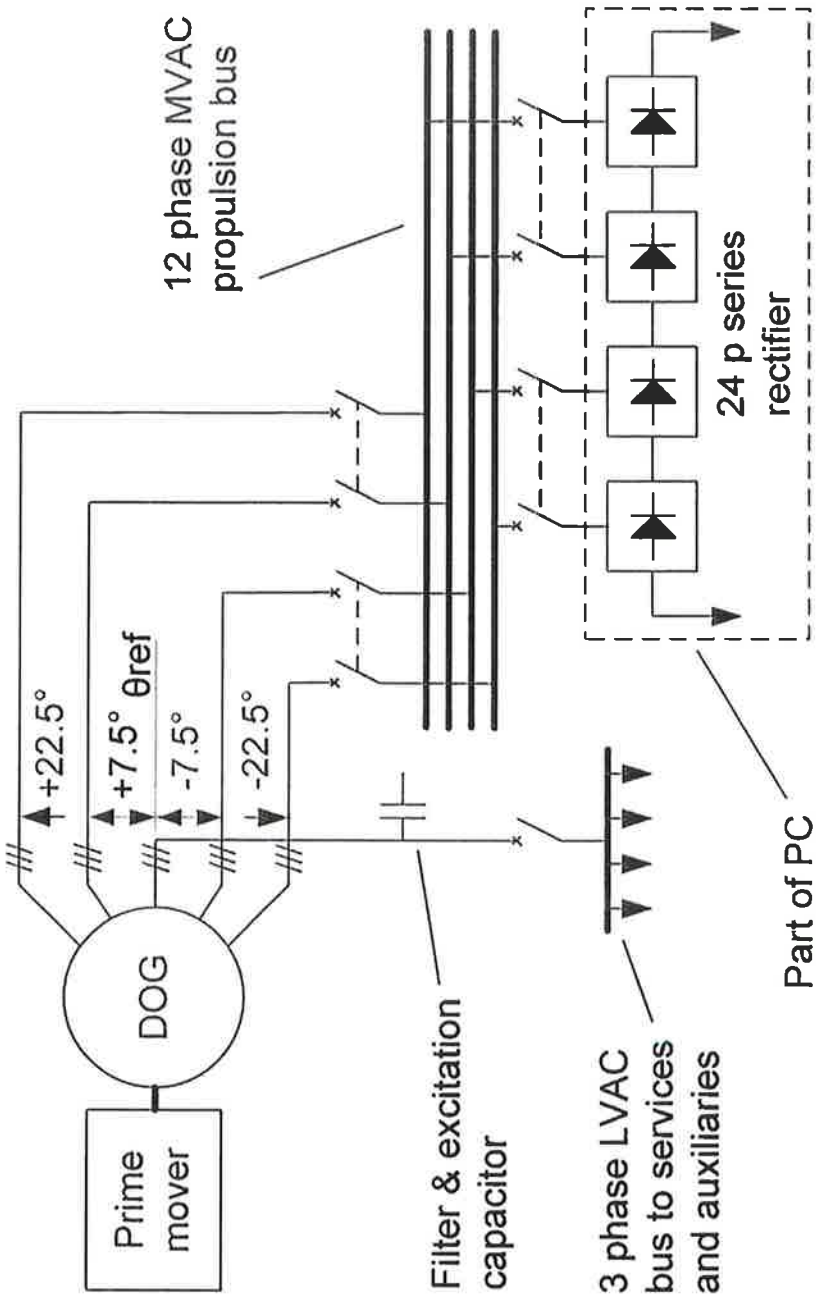
12 phase MVAC
propulsion bus
+22.5°
+7.5°
θref
-7.5°
-22.5°
DOG
Prime
mover
Filter & excitation
capacitor
3 phase LVAC
bus to services
and auxiliaries
24 p series
rectifier
Part of PC

Figure 5

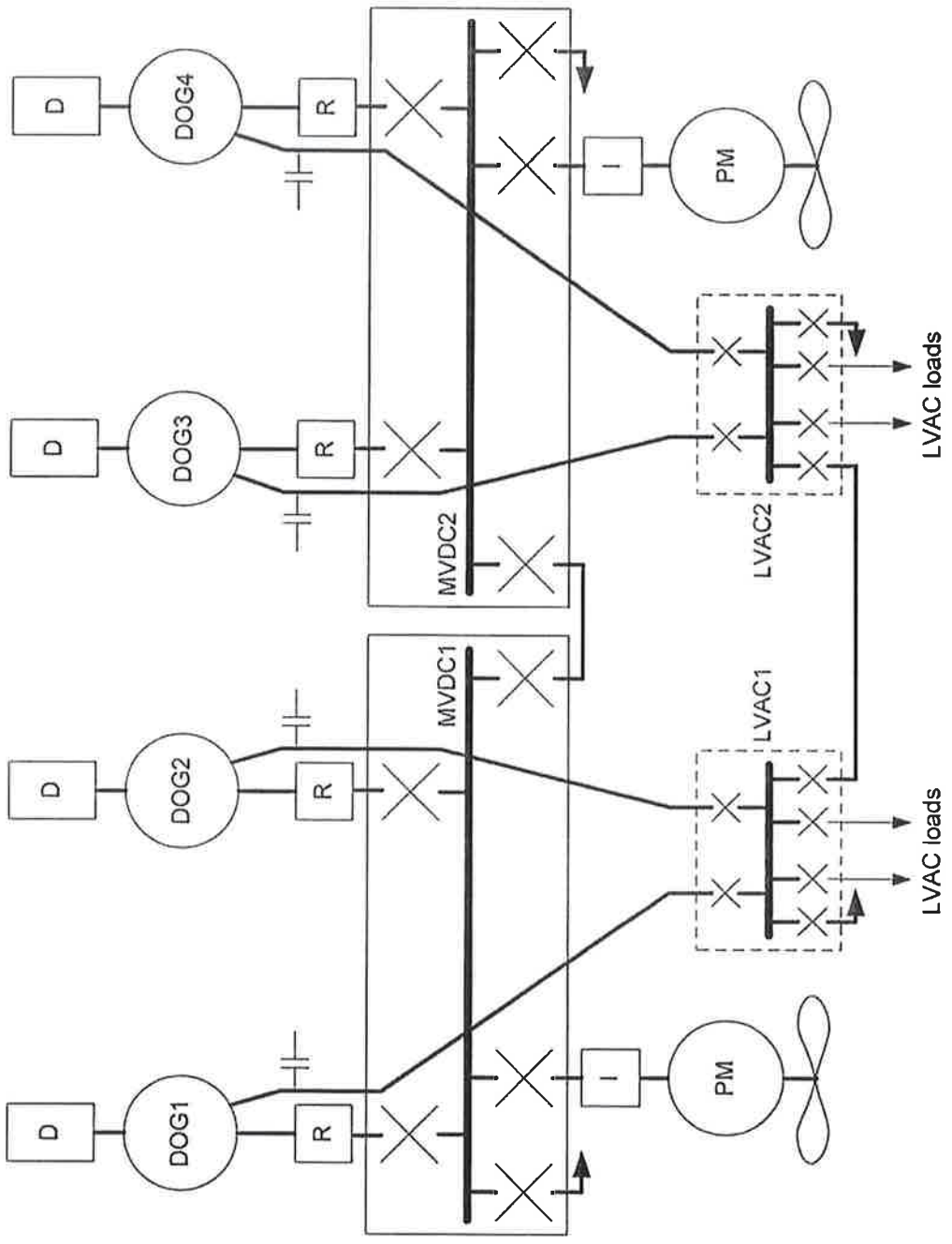
D
DOG4
R
D
DOG3
R
D
DOG2
R
D
DOG1
R
MVDC2
MVDC1
PM
PM
LVAC2
LVAC1
LVAC loads
LVAC loads

Figure 6