Fig.1

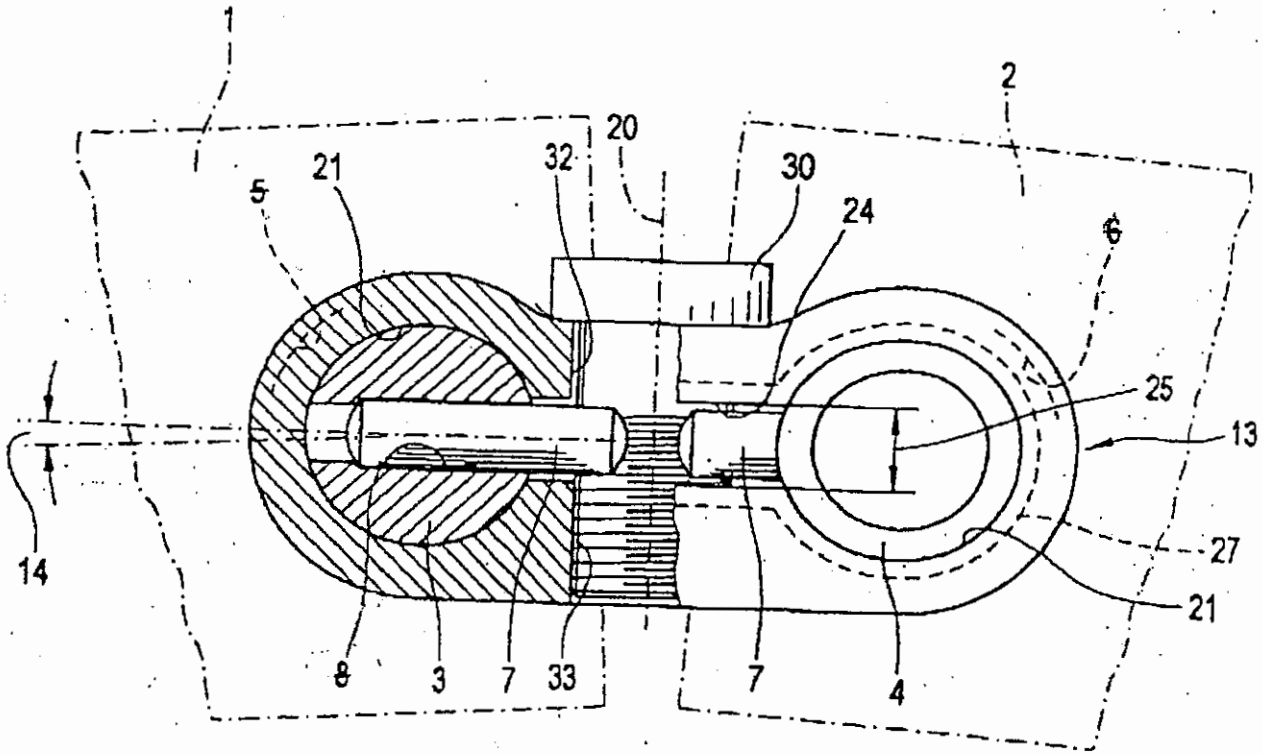

Fig.2

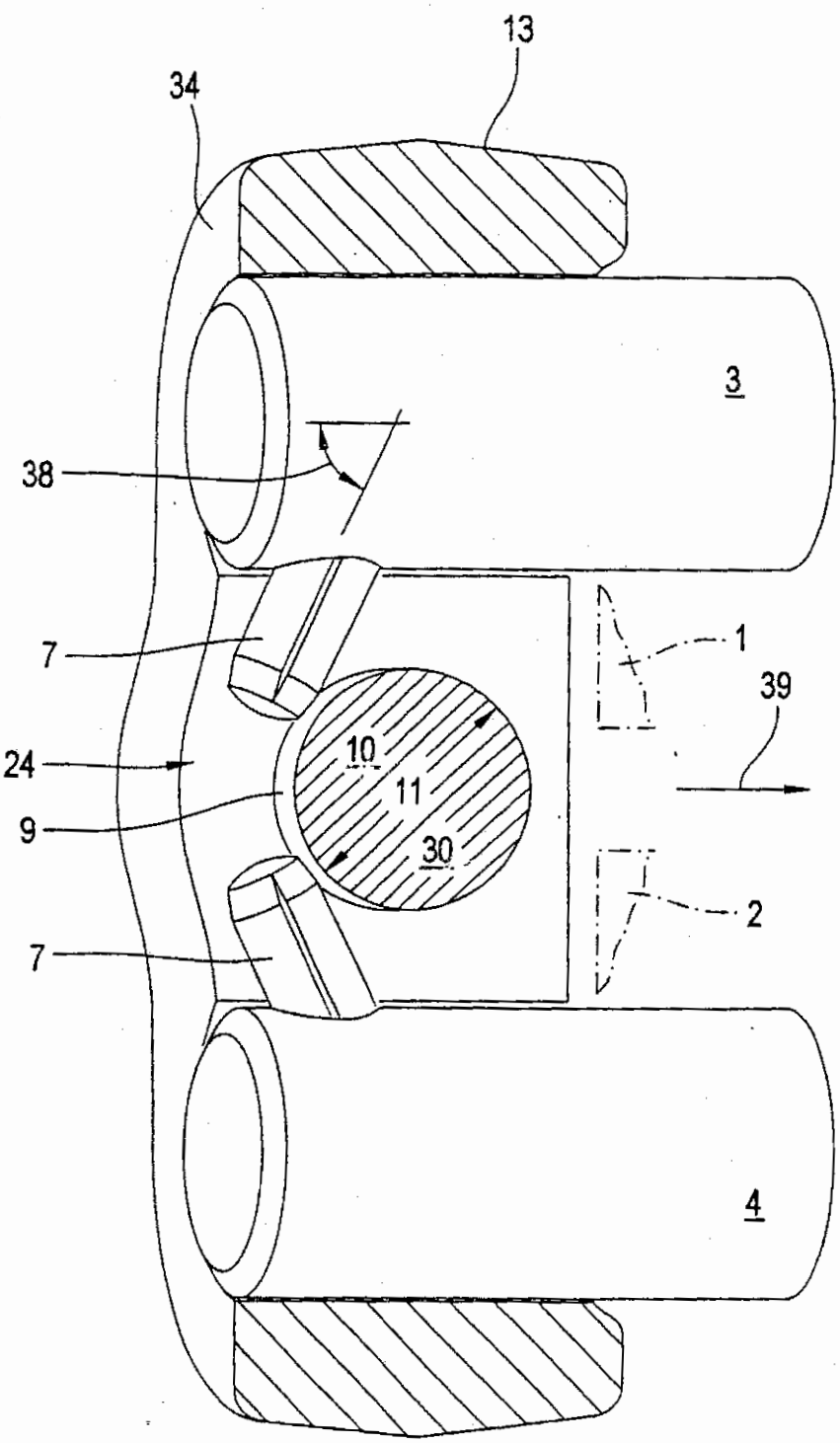

Fig.3

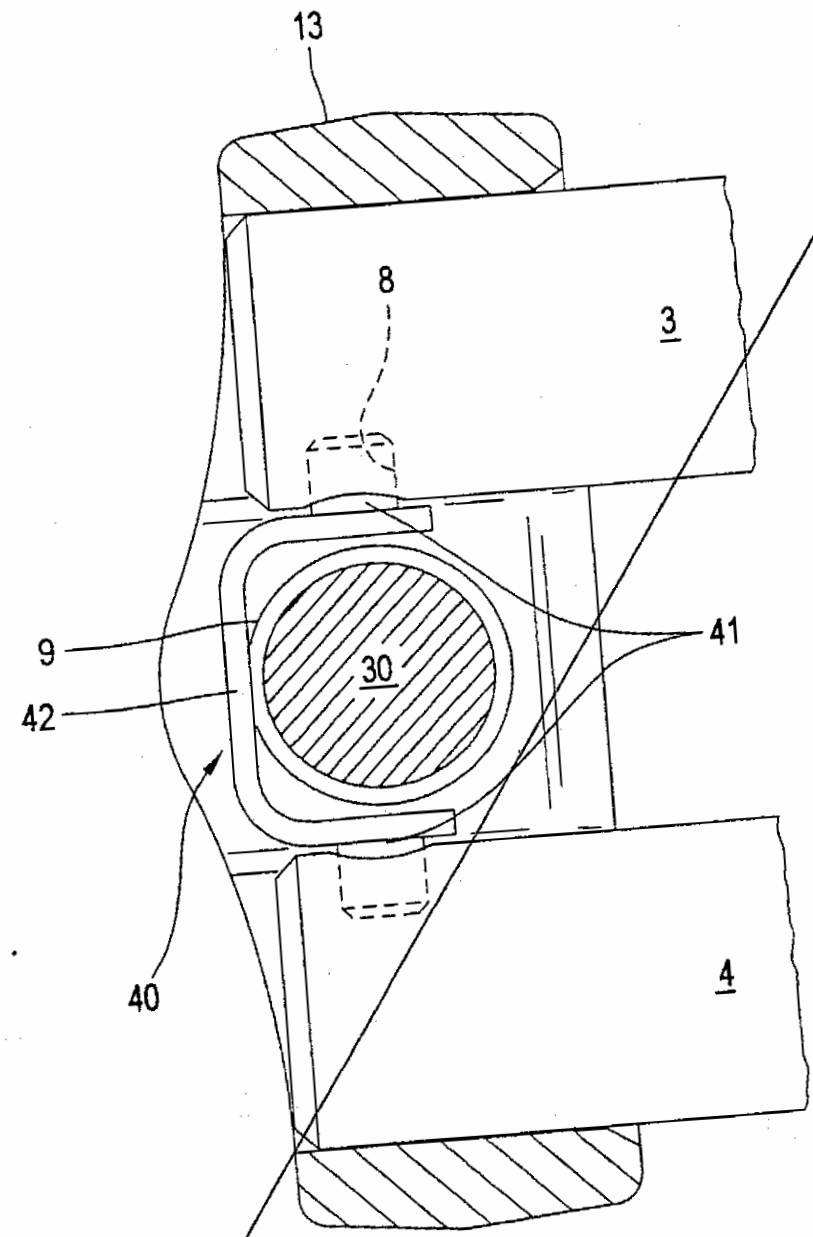

Fig. 4

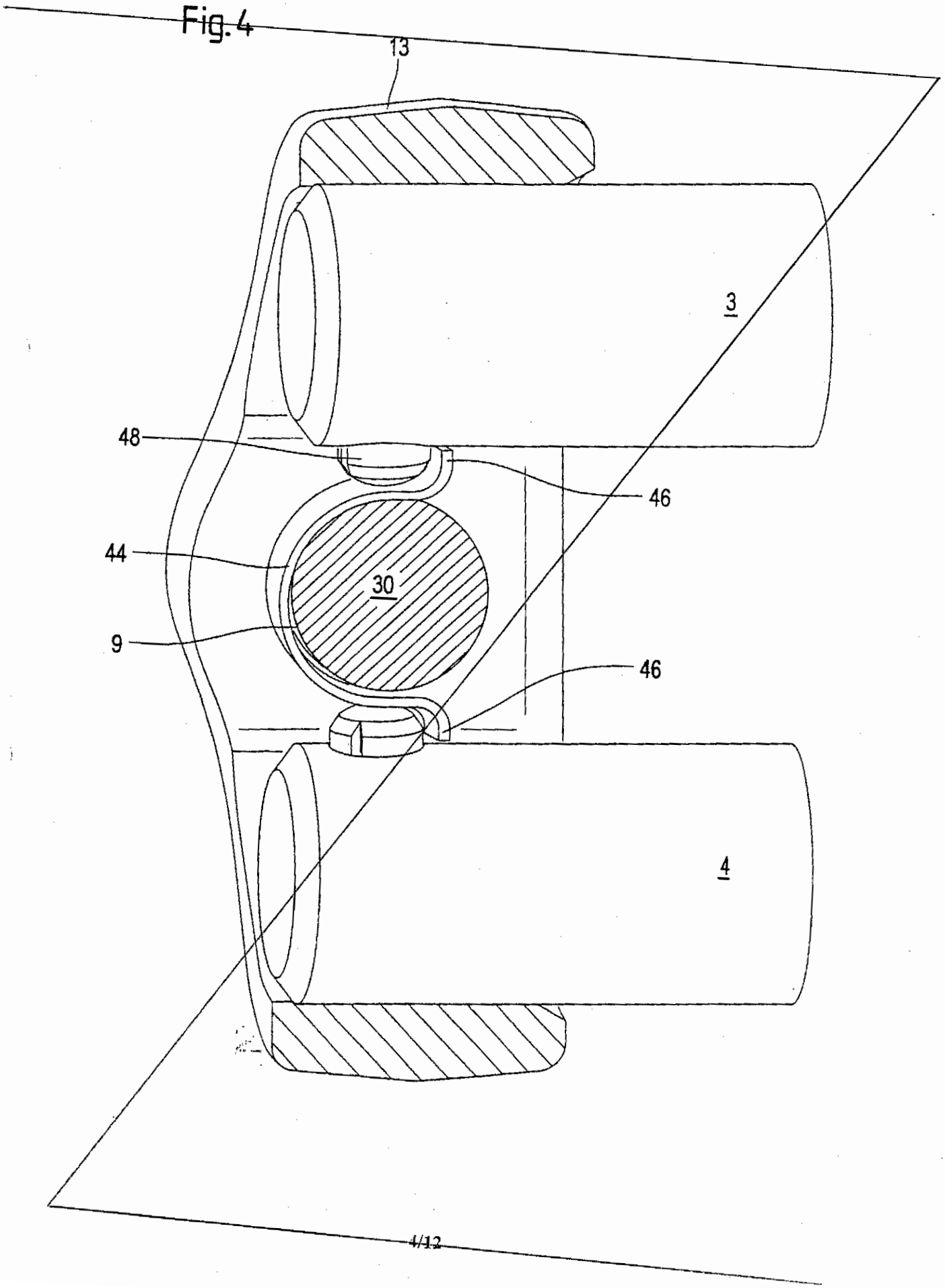

REPLACEMENT SHEET
21 DEC 2005
PCT/EP02/06624

Fig.5

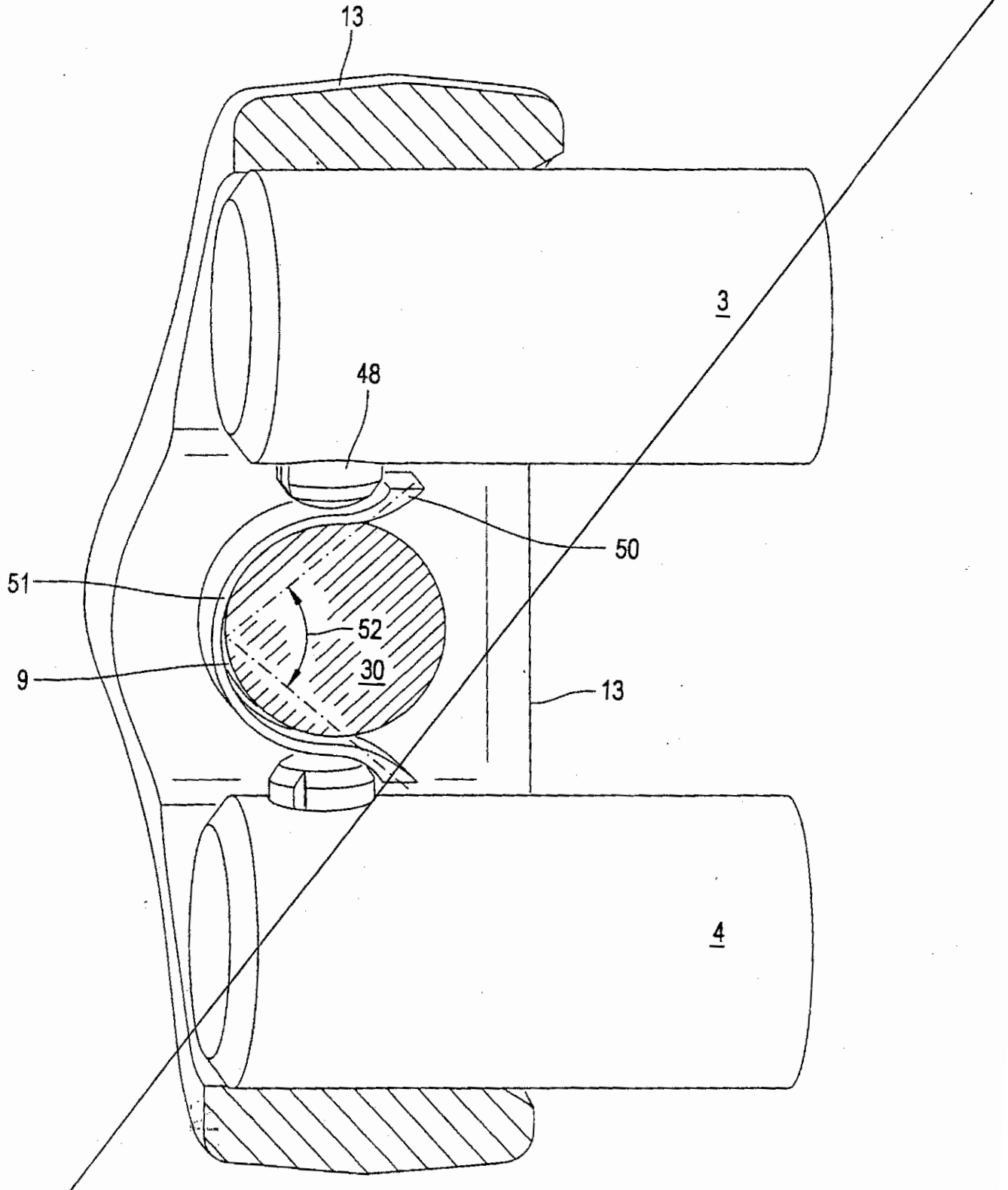

WO 03/000536

Fig.6

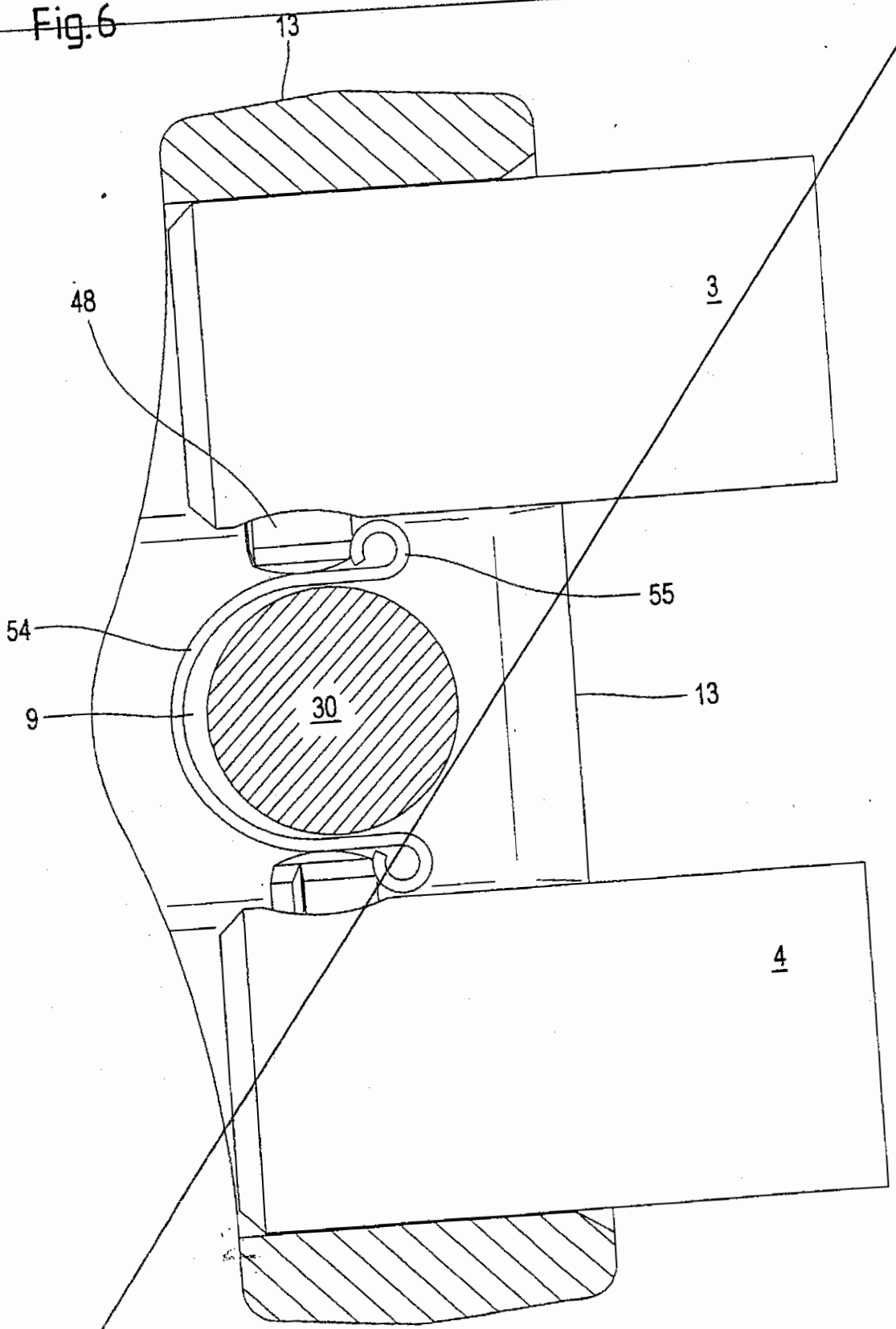

REPLACEMENT SHEET
21 DEC 2005

Fig.7

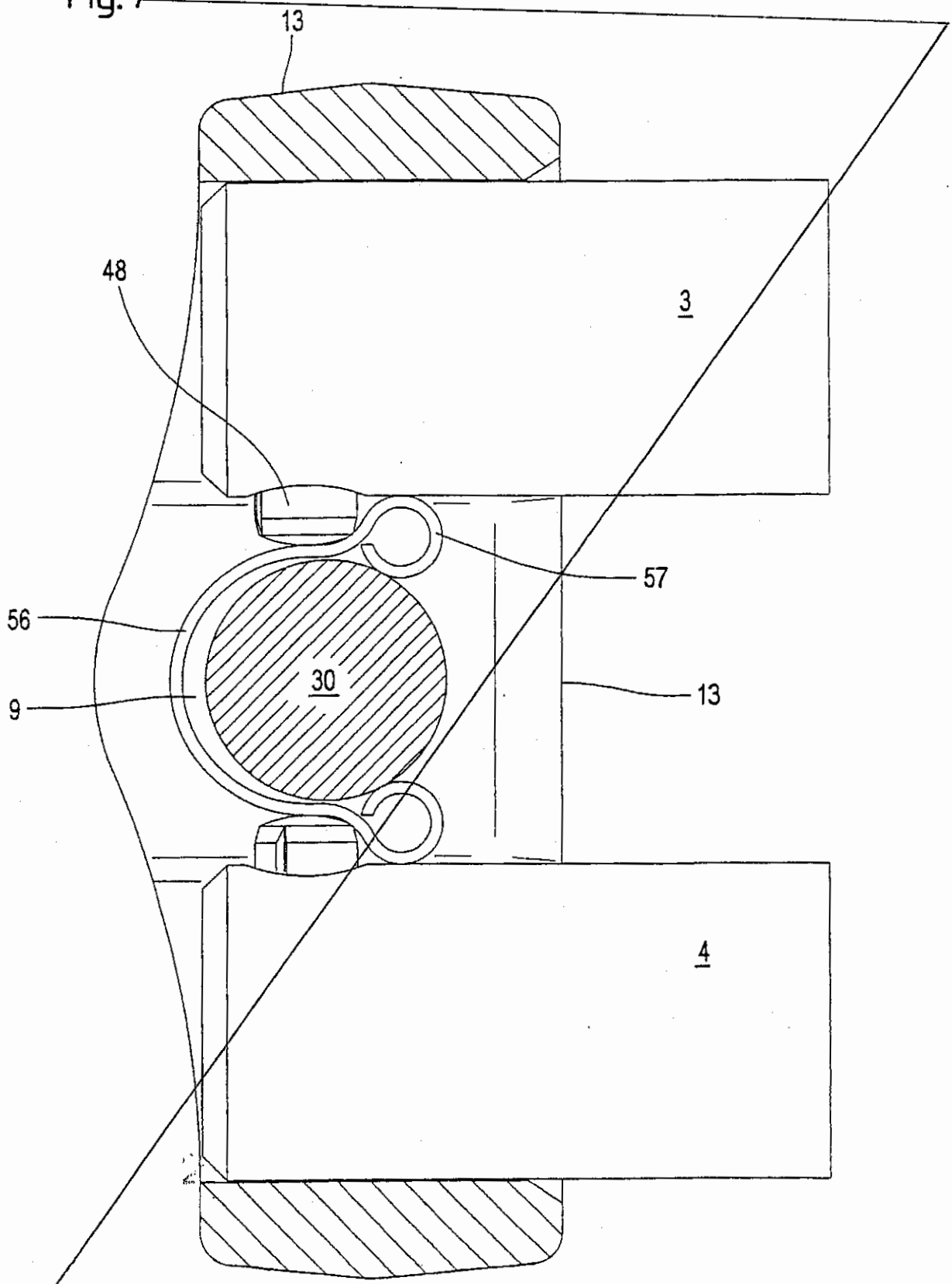

Fig.8

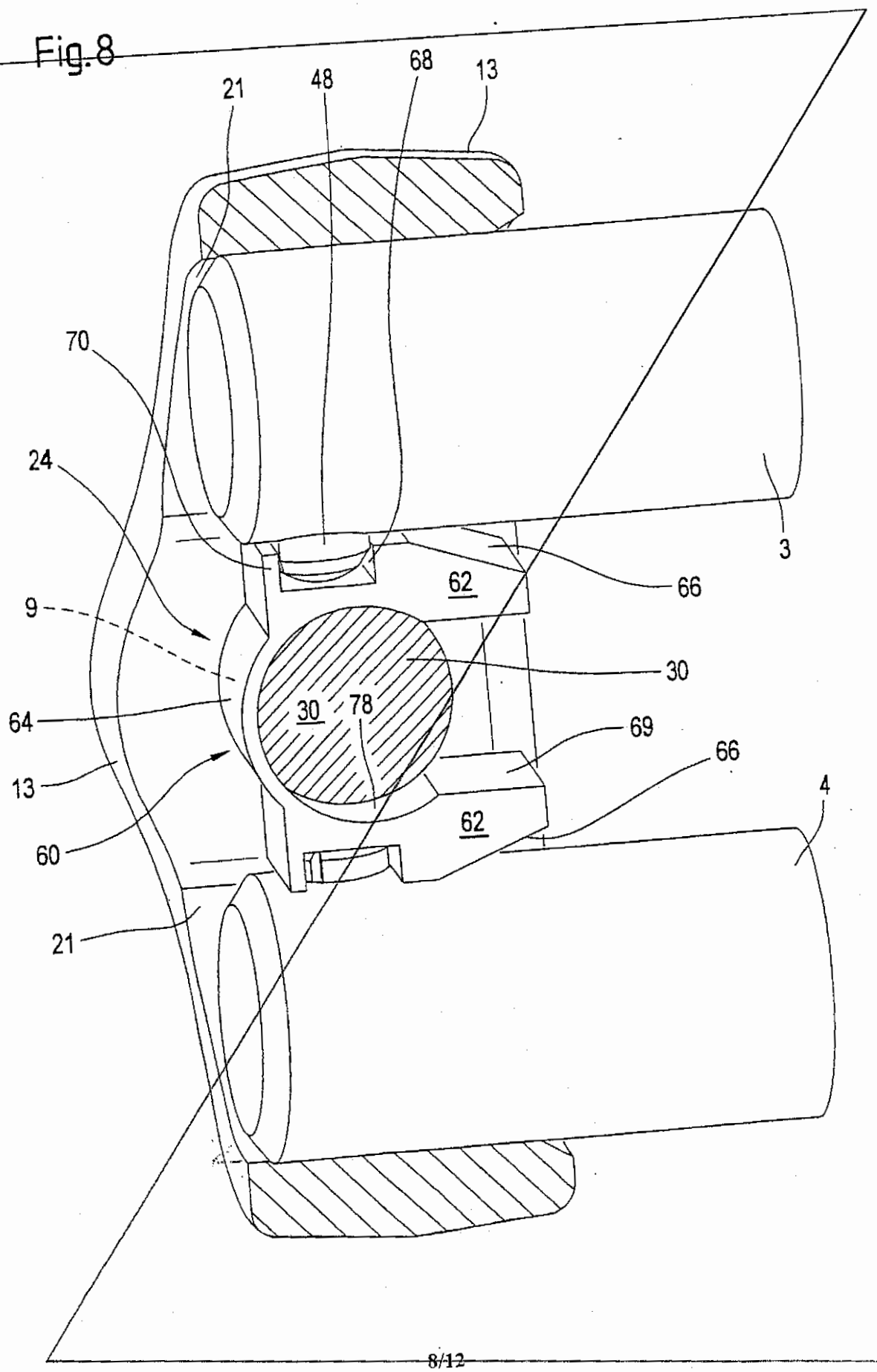

REPLACEMENT SHEET
21 DEC 2005
PCT/EP02/06624

Fig.9

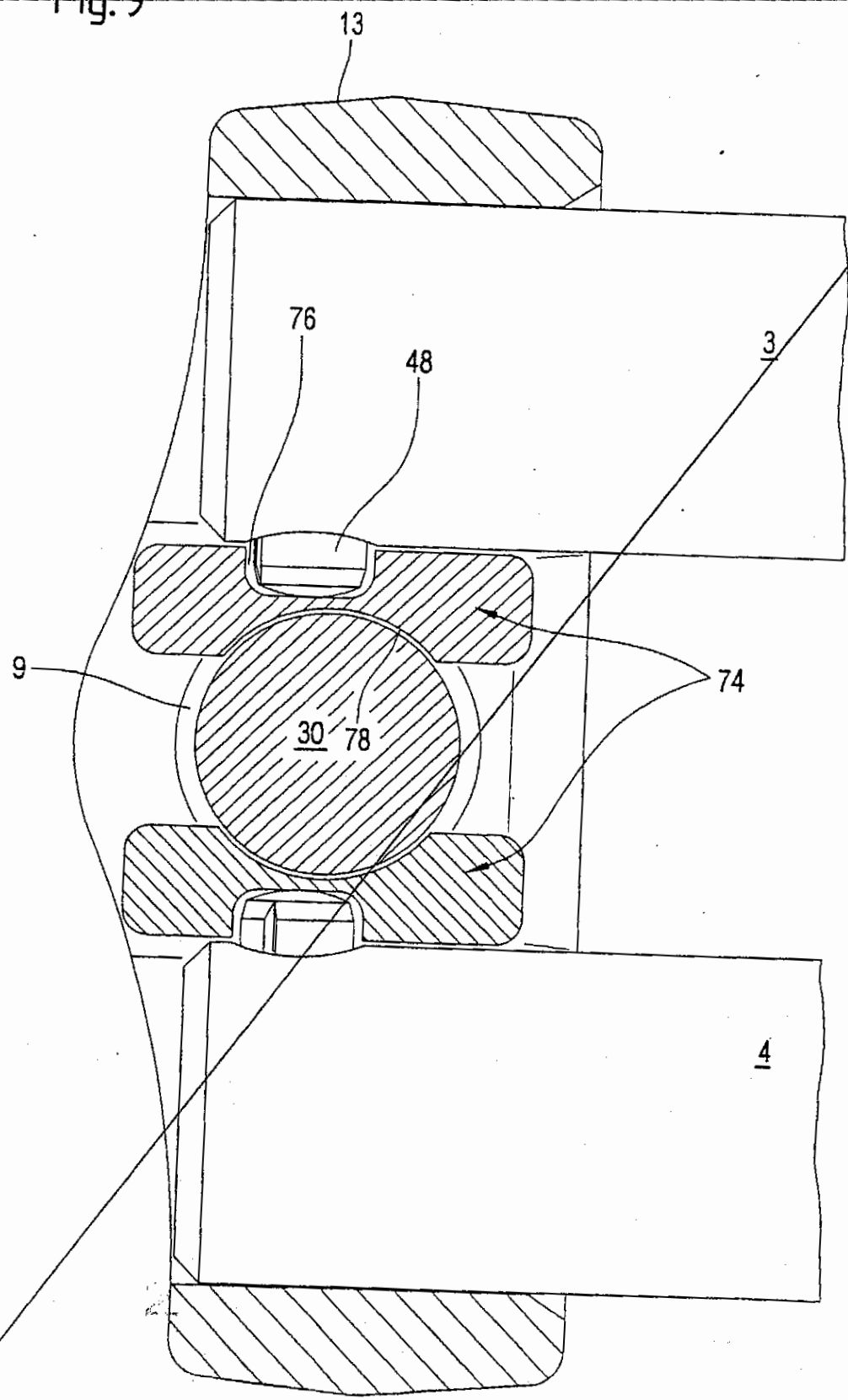

Fig.10

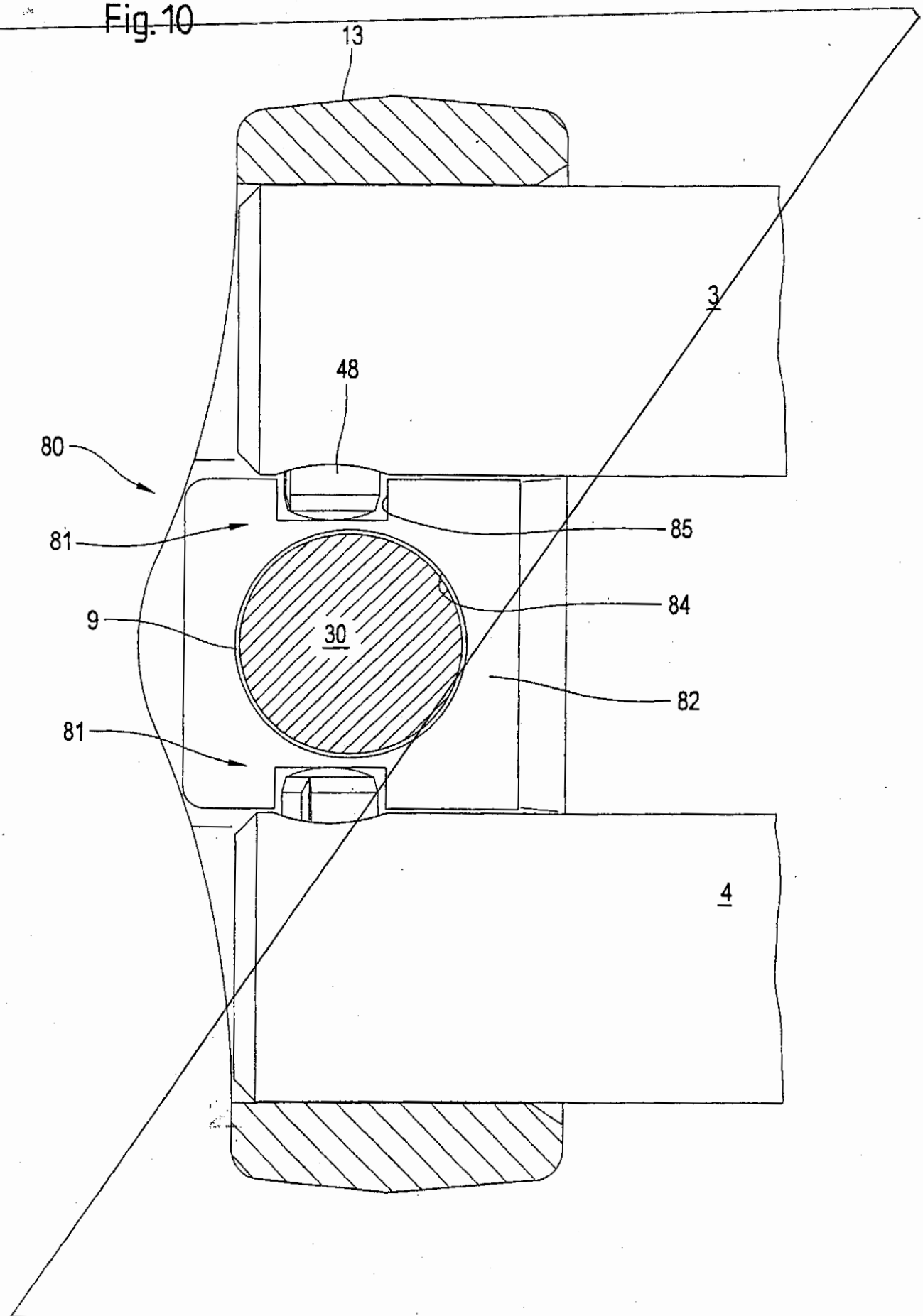

REPLACEMENT SHEET
21 DEC 2005
PCT/EP02/06624

Fig.11

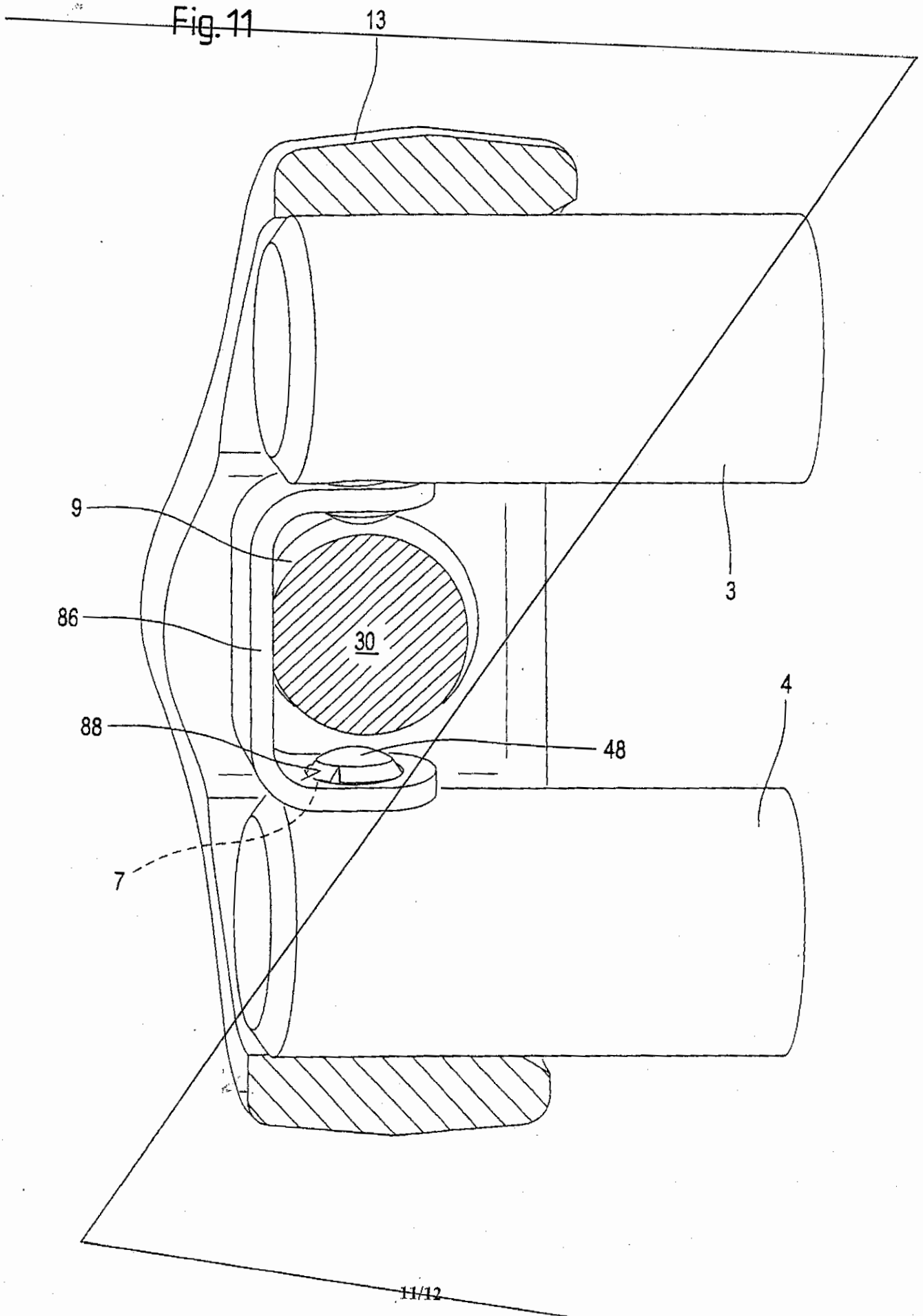

REPLACEMENT SHEET
21 DEC 2005
PCT/EP02/06624

Fig.12

