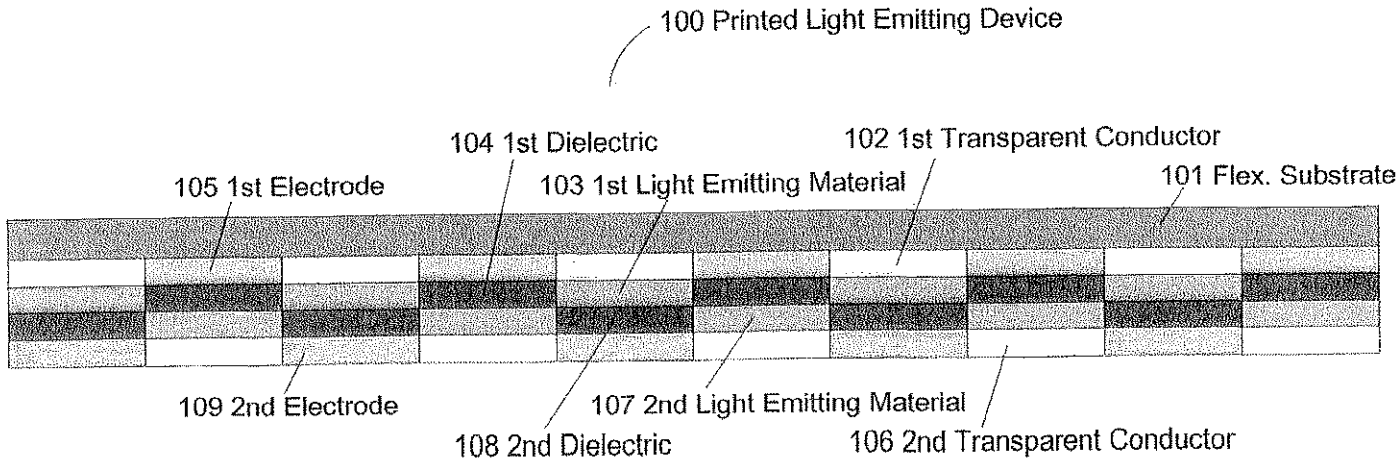
100 Printed Light Emitting Device
104 1st Dielectric
102 1st Transparent Conductor
105 1st Electrode
103 1st Light Emitting Material
101 Flex. Substrate
109 2nd Electrode
107 2nd Light Emitting Material
108 2nd Dielectric
106 2nd Transparent Conductor

FIG. 1

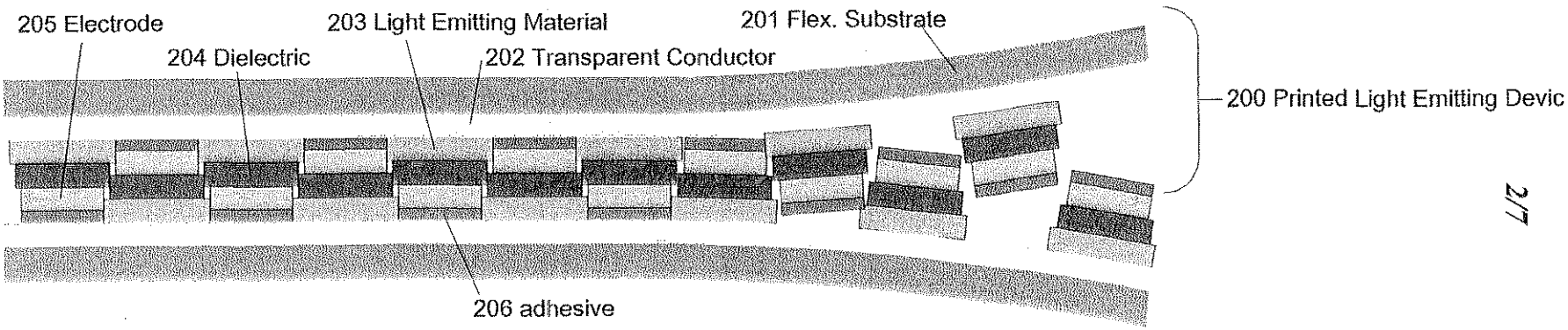
205 Electrode
204 Dielectric
203 Light Emitting Material
202 Transparent Conductor
201 Flex. Substrate
200 Printed Light Emitting Devic
206 adhesive

FIG. 2

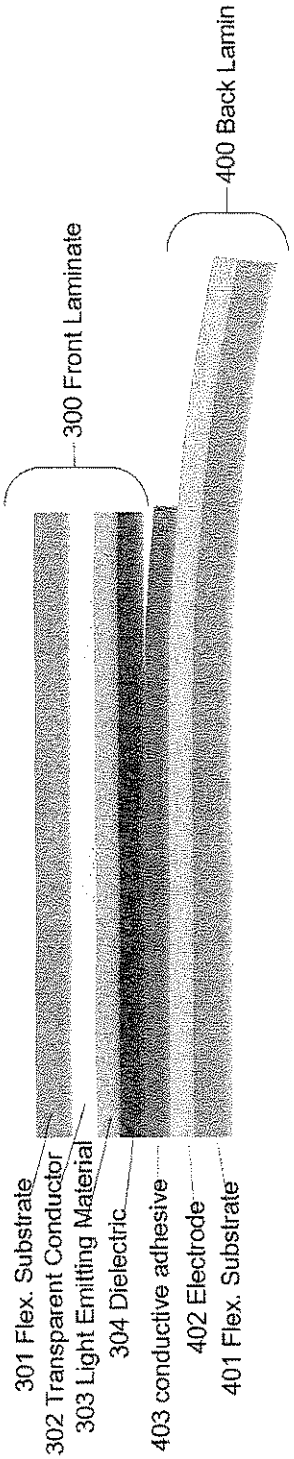
300 Front Laminate
400 Back Lamin
301 Flex. Substrate
302 Transparent Conductor
303 Light Emitting Material
304 Dielectric
403 conductive adhesive
402 Electrode
401 Flex. Substrate

FIG. 3

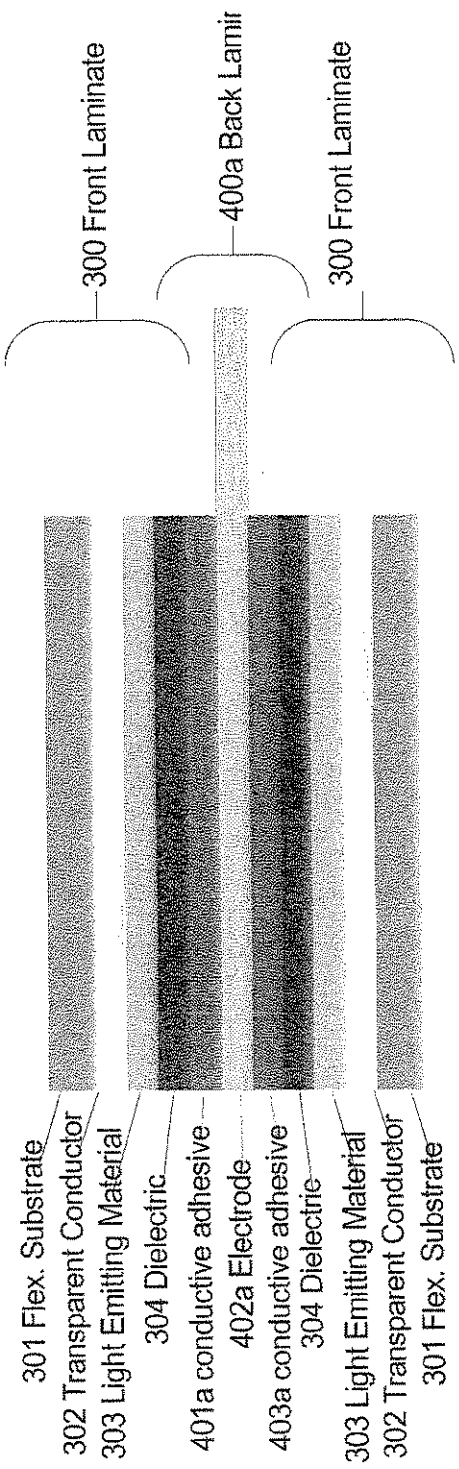
300 Front Laminate
400a Back Lamir
300 Front Laminate
301 Flex. Substrate
302 Transparent Conductor
303 Light Emitting Material
304 Dielectric
401a conductive adhesive
402a Electrode
403a conductive adhesive
304 Dielectric
303 Light Emitting Material
302 Transparent Conductor
301 Flex. Substrate

FIG. 4

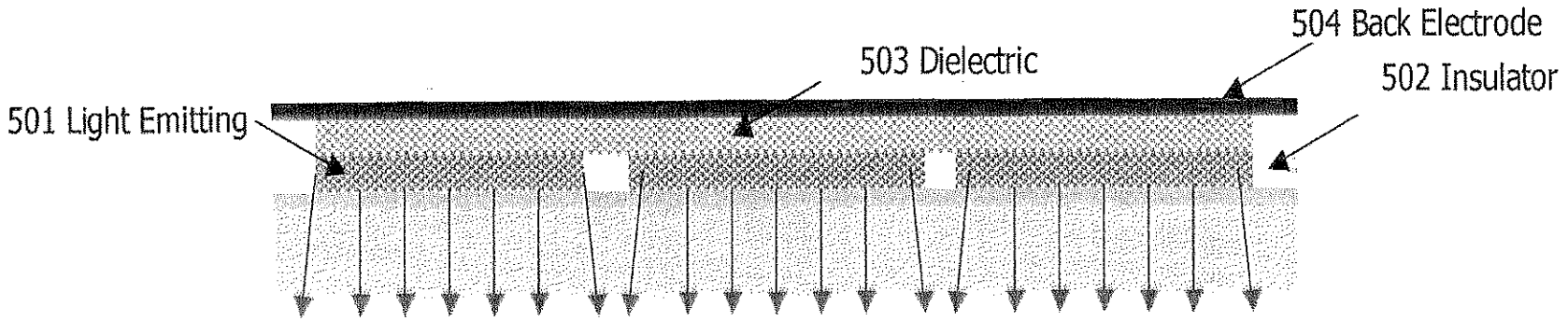
504 Back Electrode
503 Dielectric
502 Insulator
501 Light Emitting

FIG. 5

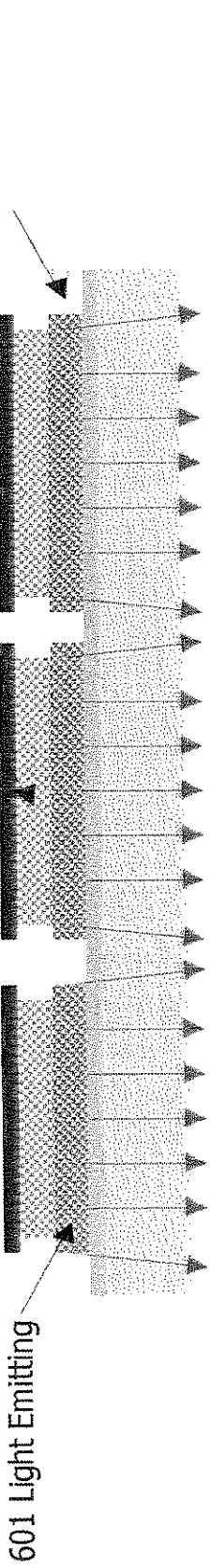
604 Back Electrode
602 Insulator
603 Dielectric
601 Light Emitting

FIG. 6

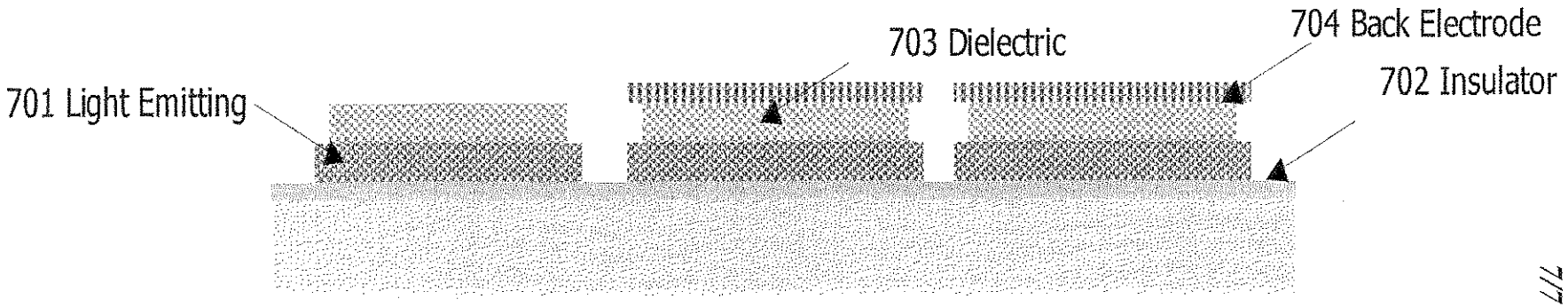
701 Light Emitting
703 Dielectric
704 Back Electrode
702 Insulator
717

FIG. 7