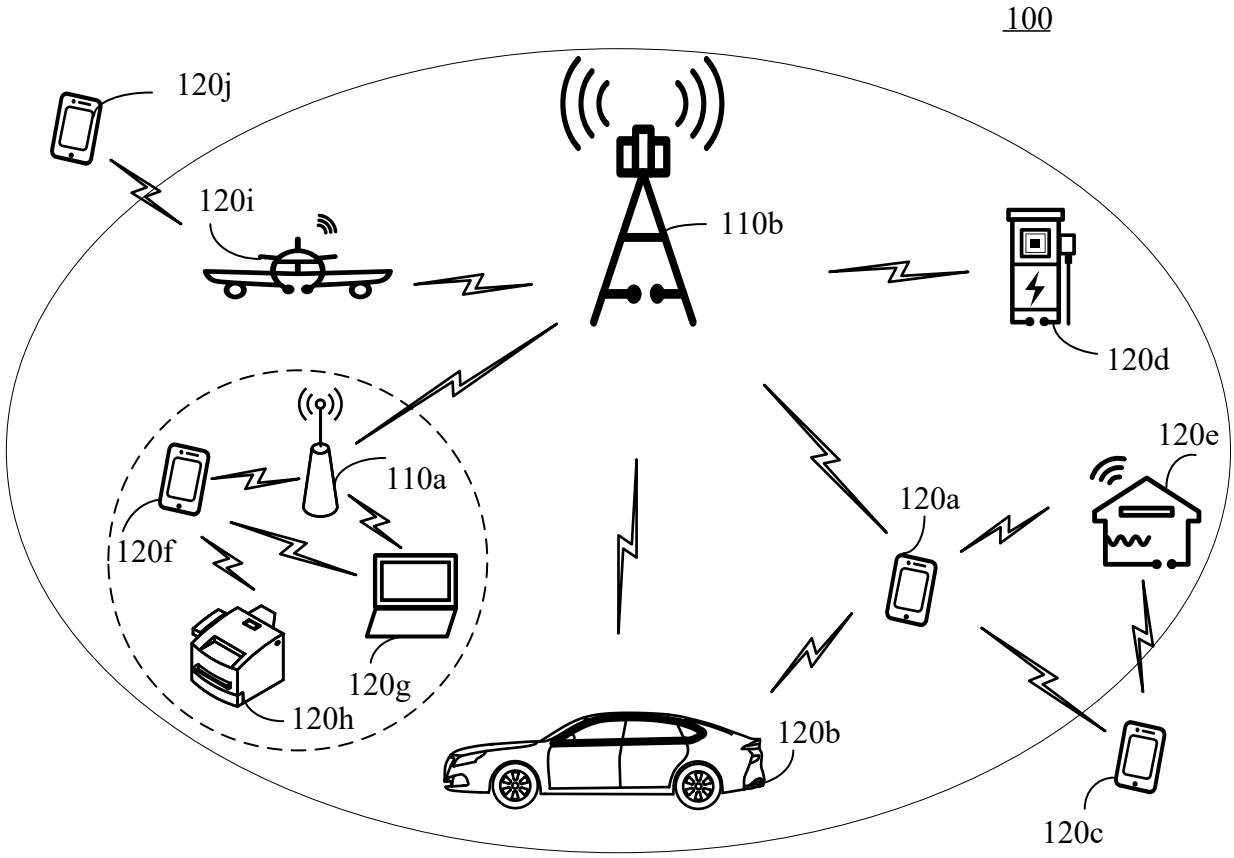
100
120j
120i
110b
120d
120e
110a
120a
120f
120g
120h
120b
120c

FIG. 1

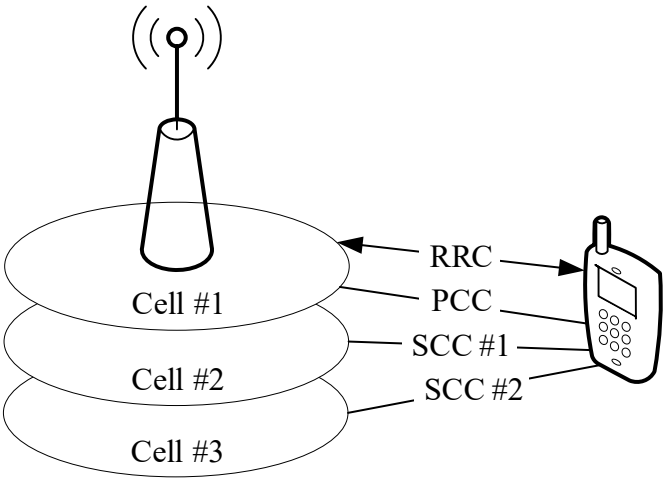
RRC
PCC
SCC #1
SCC #2
Cell #1
Cell #2
Cell #3

FIG. 2

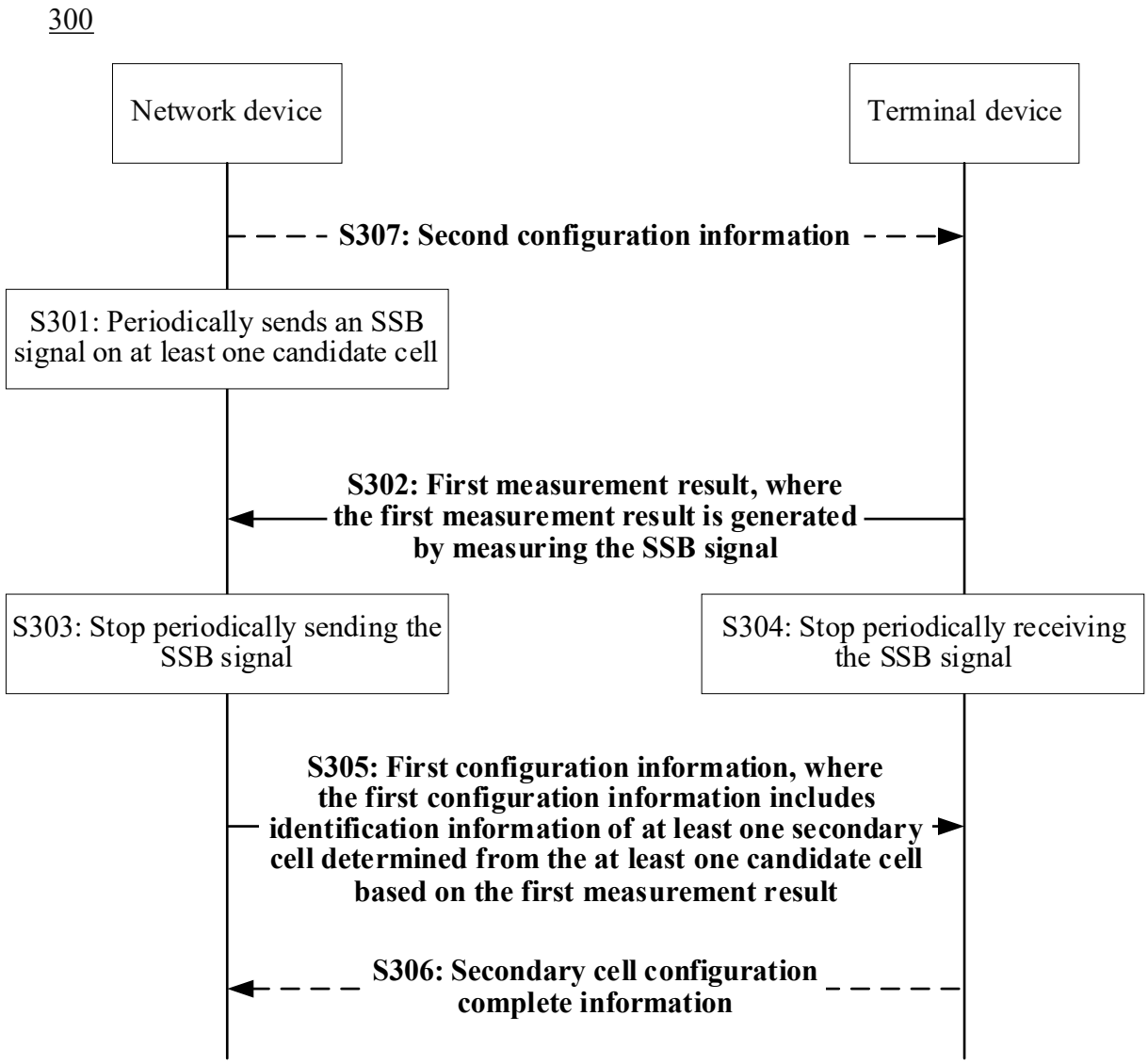
300
Network device
Terminal device
S307: Second configuration information
S301: Periodically sends an SSB signal on at least one candidate cell
S302: First measurement result, where the first measurement result is generated by measuring the SSB signal
S303: Stop periodically sending the SSB signal
S304: Stop periodically receiving the SSB signal
S305: First configuration information, where the first configuration information includes identification information of at least one secondary cell determined from the at least one candidate cell based on the first measurement result
S306: Secondary cell configuration complete information

FIG. 3

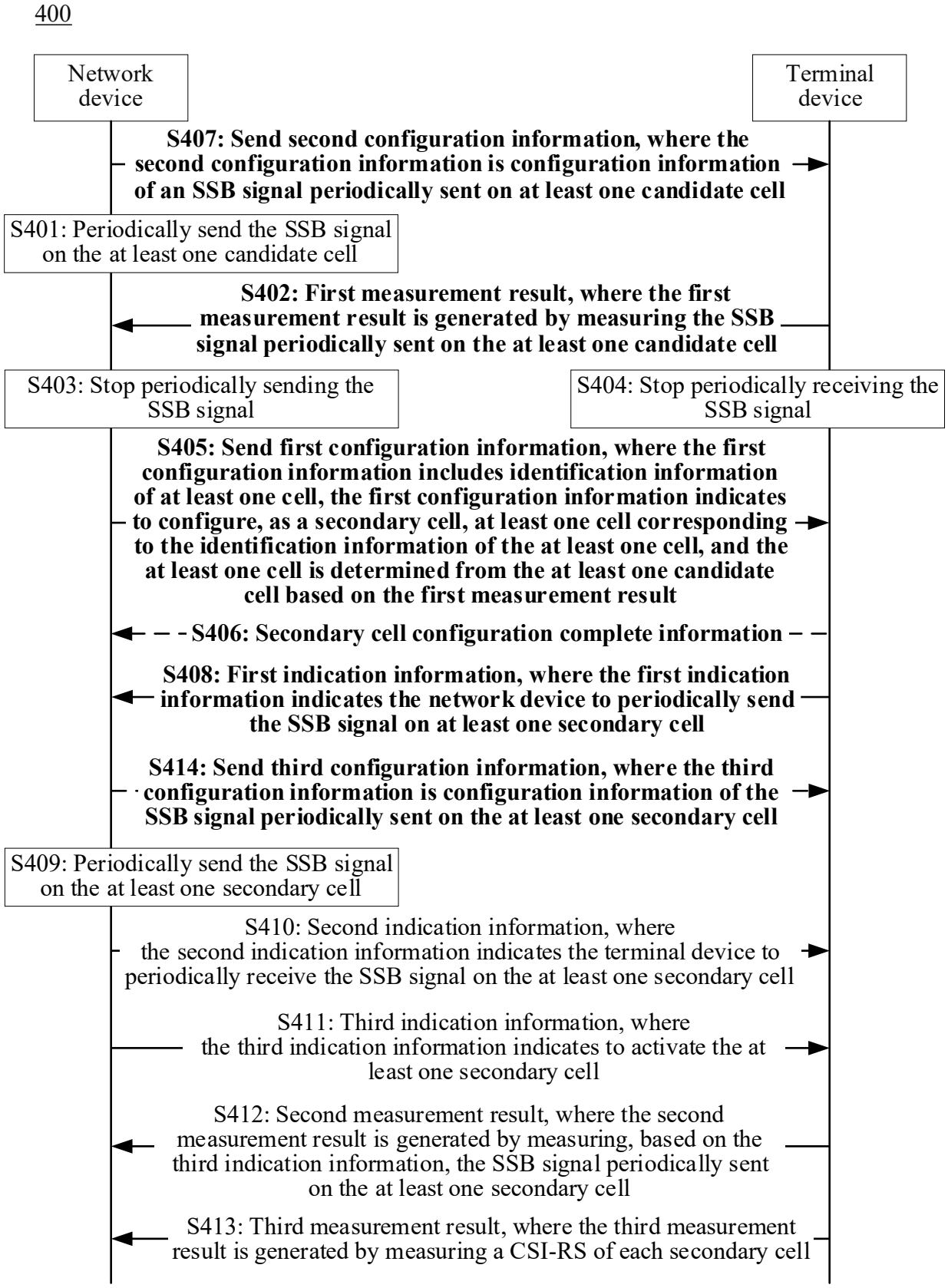
400
Network device
Terminal device
S407: Send second configuration information, where the second configuration information is configuration information of an SSB signal periodically sent on at least one candidate cell
S401: Periodically send the SSB signal on the at least one candidate cell
S402: First measurement result, where the first measurement result is generated by measuring the SSB signal periodically sent on the at least one candidate cell
S403: Stop periodically sending the SSB signal
S404: Stop periodically receiving the SSB signal
S405: Send first configuration information, where the first configuration information includes identification information of at least one cell, the first configuration information indicates to configure, as a secondary cell, at least one cell corresponding to the identification information of the at least one cell, and the at least one cell is determined from the at least one candidate cell based on the first measurement result
S406: Secondary cell configuration complete information
S408: First indication information, where the first indication information indicates the network device to periodically send the SSB signal on at least one secondary cell
S414: Send third configuration information, where the third configuration information is configuration information of the SSB signal periodically sent on the at least one secondary cell
S409: Periodically send the SSB signal on the at least one secondary cell
S410: Second indication information, where the second indication information indicates the terminal device to periodically receive the SSB signal on the at least one secondary cell
S411: Third indication information, where the third indication information indicates to activate the at least one secondary cell
S412: Second measurement result, where the second measurement result is generated by measuring, based on the third indication information, the SSB signal periodically sent on the at least one secondary cell
S413: Third measurement result, where the third measurement result is generated by measuring a CSI-RS of each secondary cell

FIG. 4

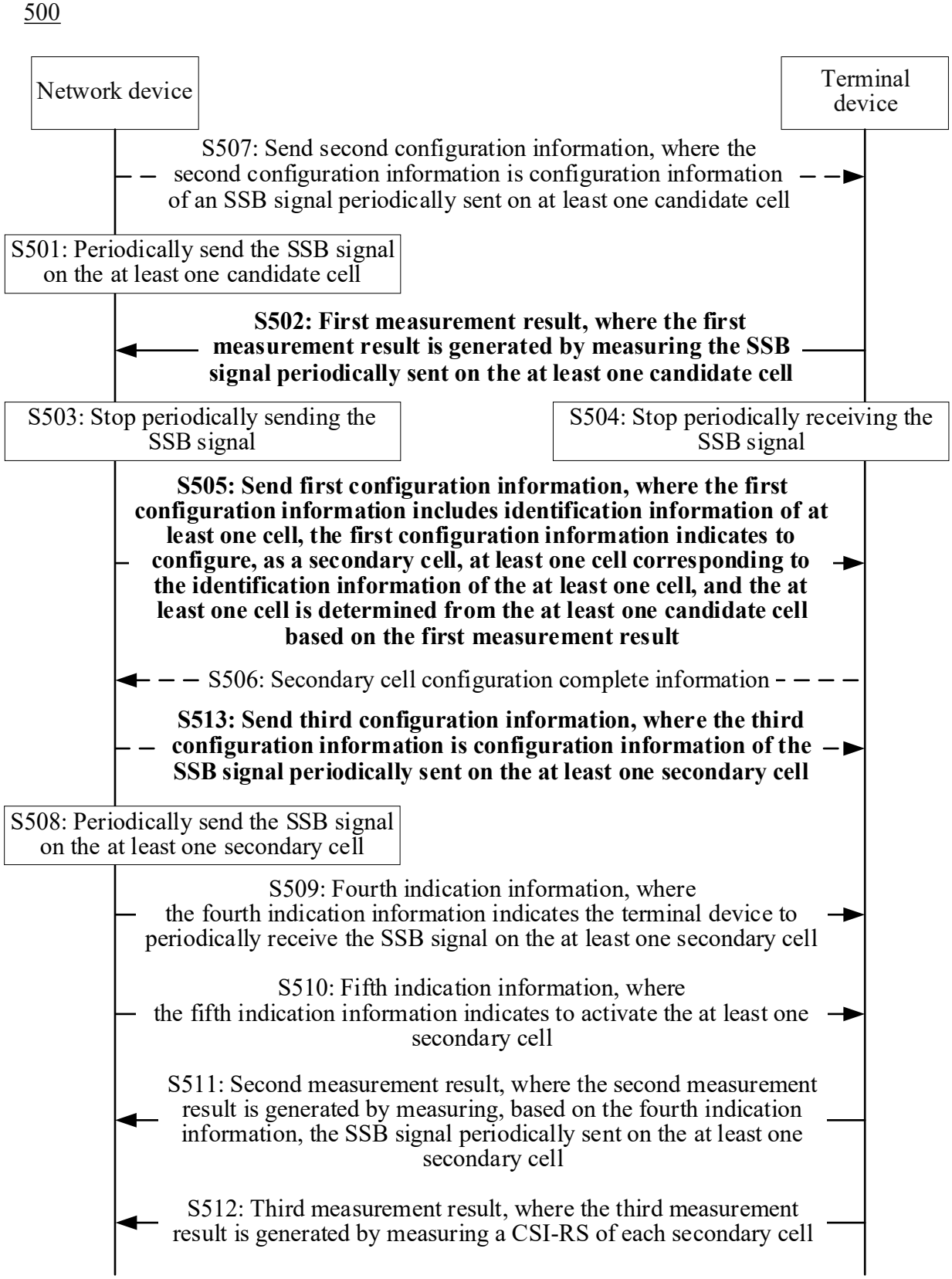
500
Network device
Terminal device
S507: Send second configuration information, where the second configuration information is configuration information of an SSB signal periodically sent on at least one candidate cell
S501: Periodically send the SSB signal on the at least one candidate cell
S502: First measurement result, where the first measurement result is generated by measuring the SSB signal periodically sent on the at least one candidate cell
S503: Stop periodically sending the SSB signal
S504: Stop periodically receiving the SSB signal
S505: Send first configuration information, where the first configuration information includes identification information of at least one cell, the first configuration information indicates to configure, as a secondary cell, at least one cell corresponding to the identification information of the at least one cell, and the at least one cell is determined from the at least one candidate cell based on the first measurement result
S506: Secondary cell configuration complete information
S513: Send third configuration information, where the third configuration information is configuration information of the SSB signal periodically sent on the at least one secondary cell
S508: Periodically send the SSB signal on the at least one secondary cell
S509: Fourth indication information, where the fourth indication information indicates the terminal device to periodically receive the SSB signal on the at least one secondary cell
S510: Fifth indication information, where the fifth indication information indicates to activate the at least one secondary cell
S511: Second measurement result, where the second measurement result is generated by measuring, based on the fourth indication information, the SSB signal periodically sent on the at least one secondary cell
S512: Third measurement result, where the third measurement result is generated by measuring a CSI-RS of each secondary cell

FIG. 5

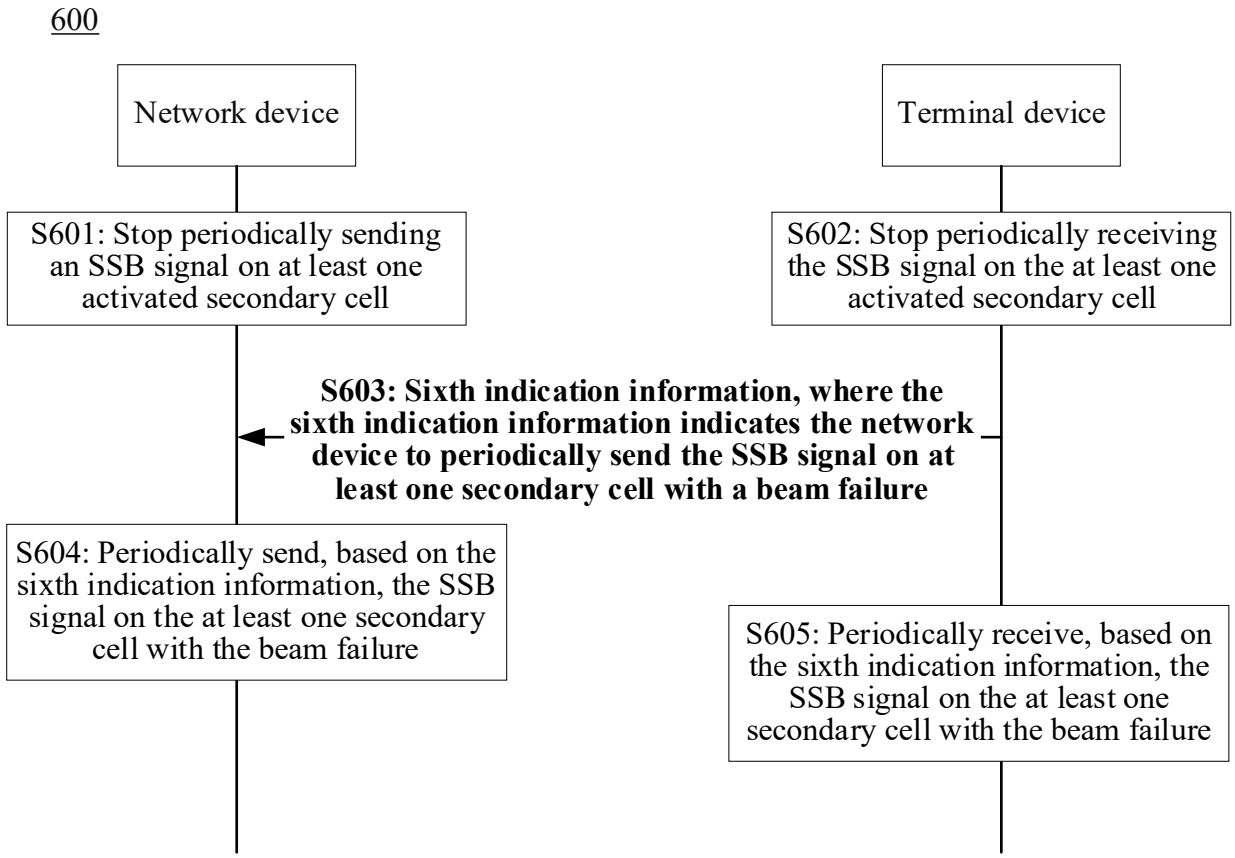
600
Network device
Terminal device
S601: Stop periodically sending an SSB signal on at least one activated secondary cell
S602: Stop periodically receiving the SSB signal on the at least one activated secondary cell
S603: Sixth indication information, where the sixth indication information indicates the network device to periodically send the SSB signal on at least one secondary cell with a beam failure
S604: Periodically send, based on the sixth indication information, the SSB signal on the at least one secondary cell with the beam failure
S605: Periodically receive, based on the sixth indication information, the SSB signal on the at least one secondary cell with the beam failure

FIG. 6

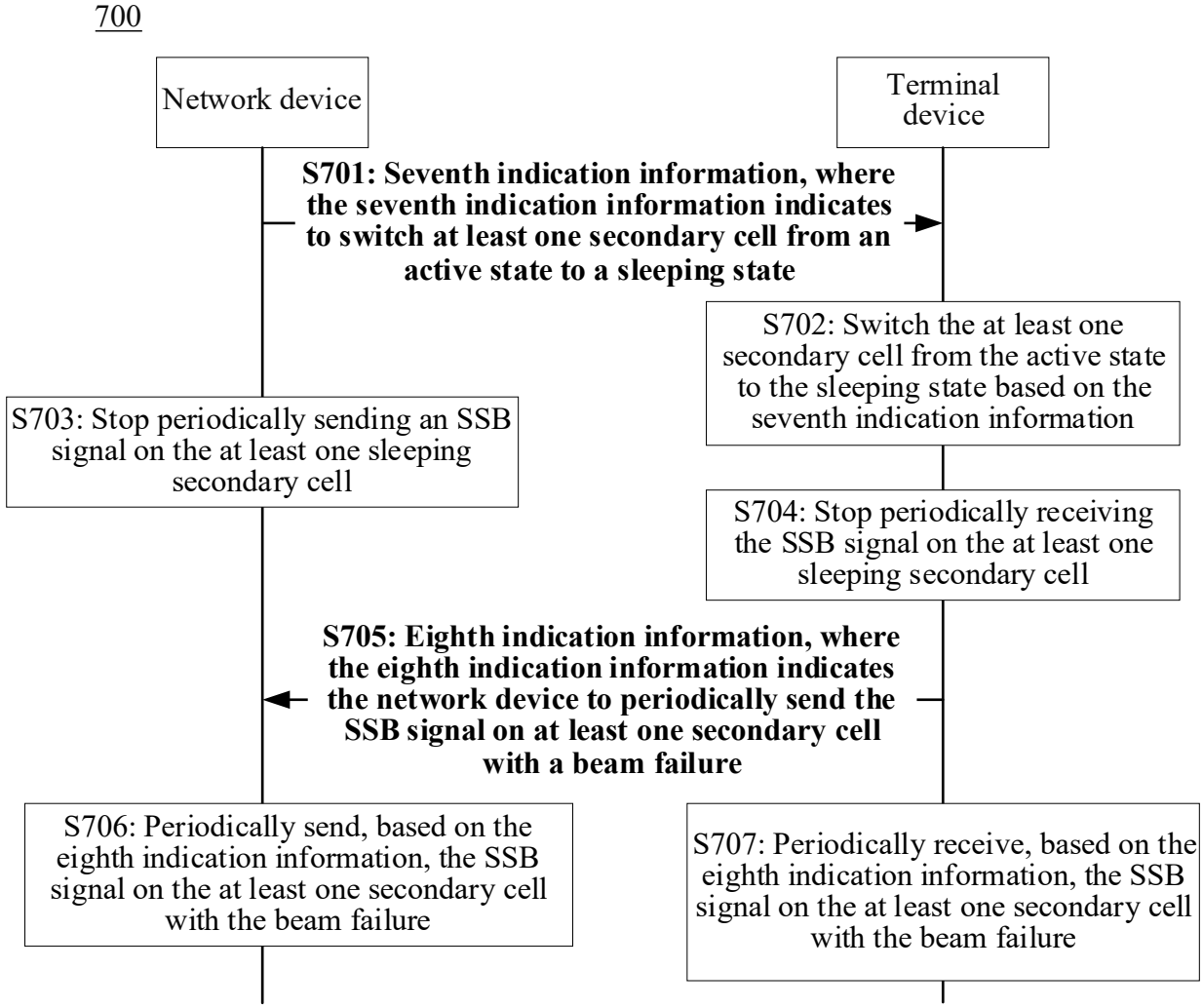
700
Network device
Terminal device
S701: Seventh indication information, where the seventh indication information indicates to switch at least one secondary cell from an active state to a sleeping state
S702: Switch the at least one secondary cell from the active state to the sleeping state based on the seventh indication information
S703: Stop periodically sending an SSB signal on the at least one sleeping secondary cell
S704: Stop periodically receiving the SSB signal on the at least one sleeping secondary cell
S705: Eighth indication information, where the eighth indication information indicates the network device to periodically send the SSB signal on at least one secondary cell with a beam failure
S706: Periodically send, based on the eighth indication information, the SSB signal on the at least one secondary cell with the beam failure
S707: Periodically receive, based on the eighth indication information, the SSB signal on the at least one secondary cell with the beam failure

FIG. 7

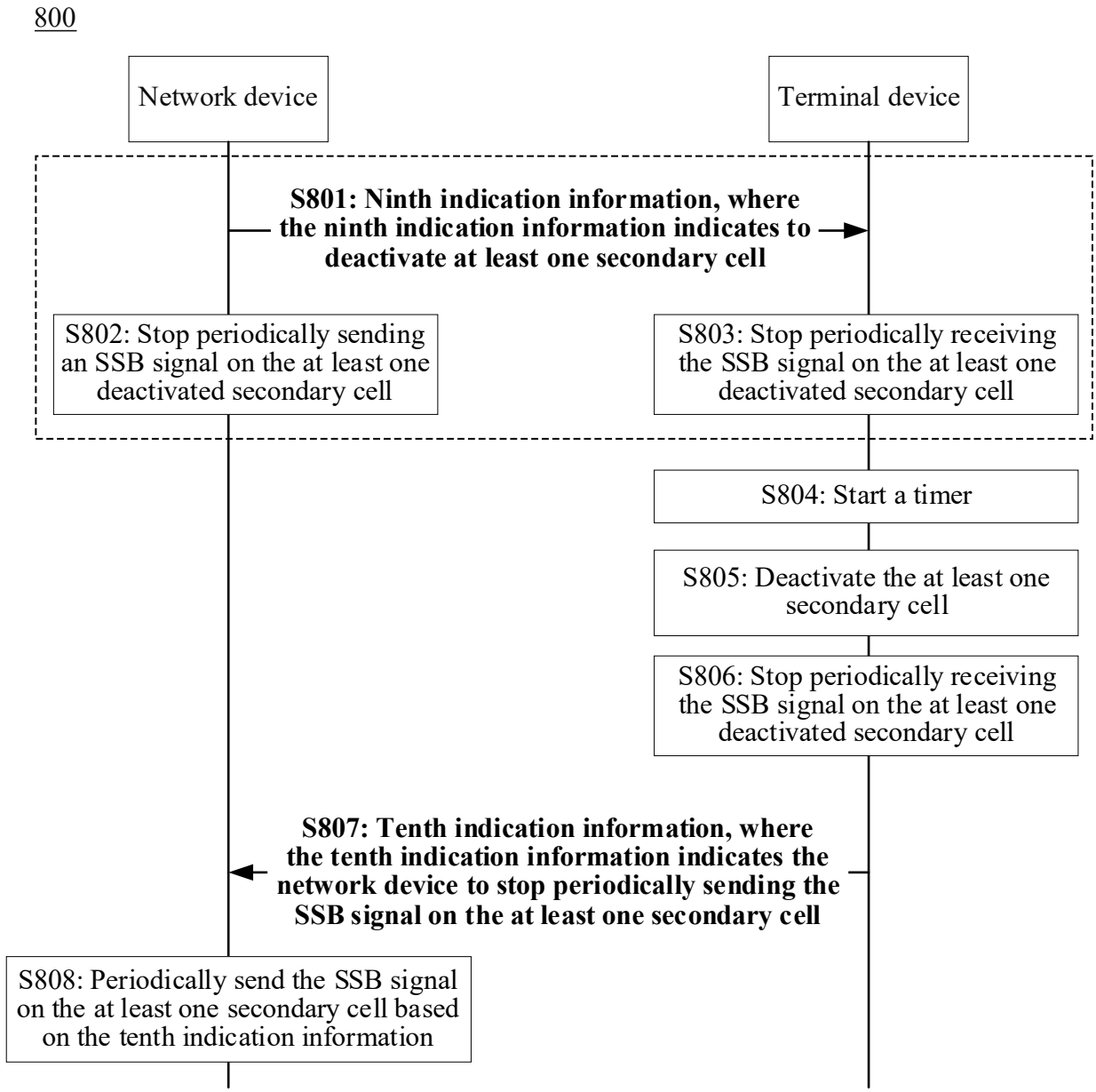
800
Network device
Terminal device
S801: Ninth indication information, where the ninth indication information indicates to deactivate at least one secondary cell
S802: Stop periodically sending an SSB signal on the at least one deactivated secondary cell
S803: Stop periodically receiving the SSB signal on the at least one deactivated secondary cell
S804: Start a timer
S805: Deactivate the at least one secondary cell
S806: Stop periodically receiving the SSB signal on the at least one deactivated secondary cell
S807: Tenth indication information, where the tenth indication information indicates the network device to stop periodically sending the SSB signal on the at least one secondary cell
S808: Periodically send the SSB signal on the at least one secondary cell based on the tenth indication information

FIG. 8

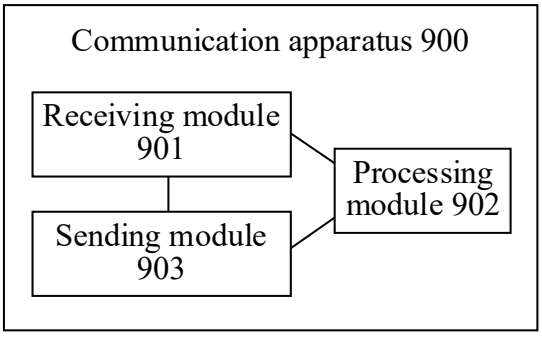
Communication apparatus 900
Receiving module 901
Sending module 903
Processing module 902

FIG. 9

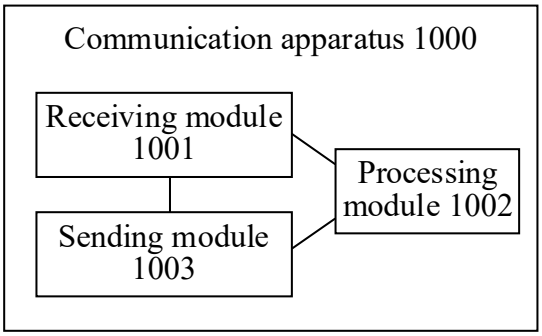

FIG. 10

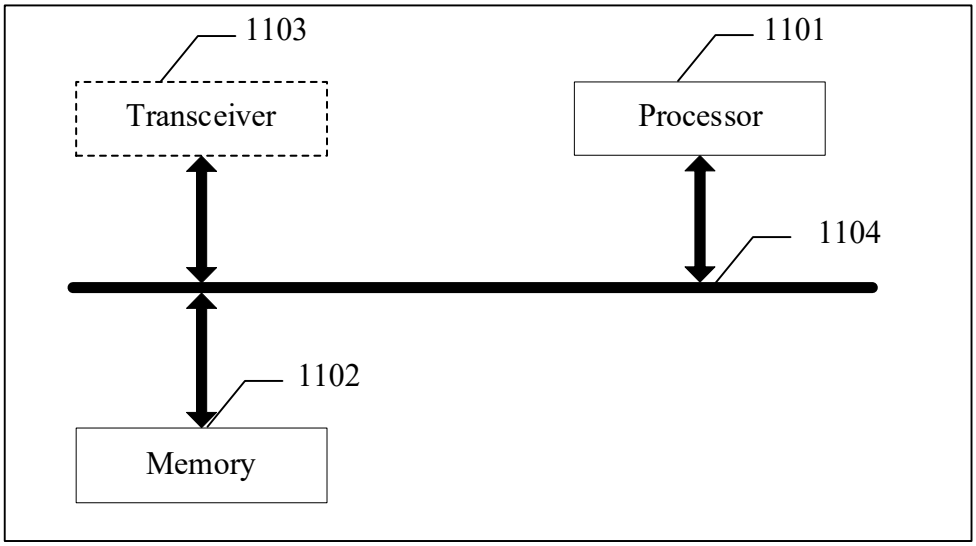

FIG. 11

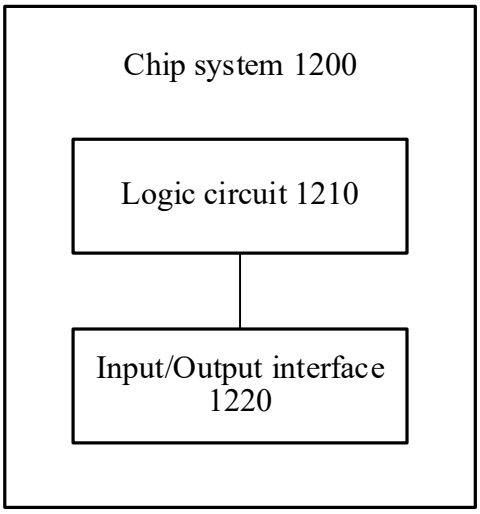

FIG. 12