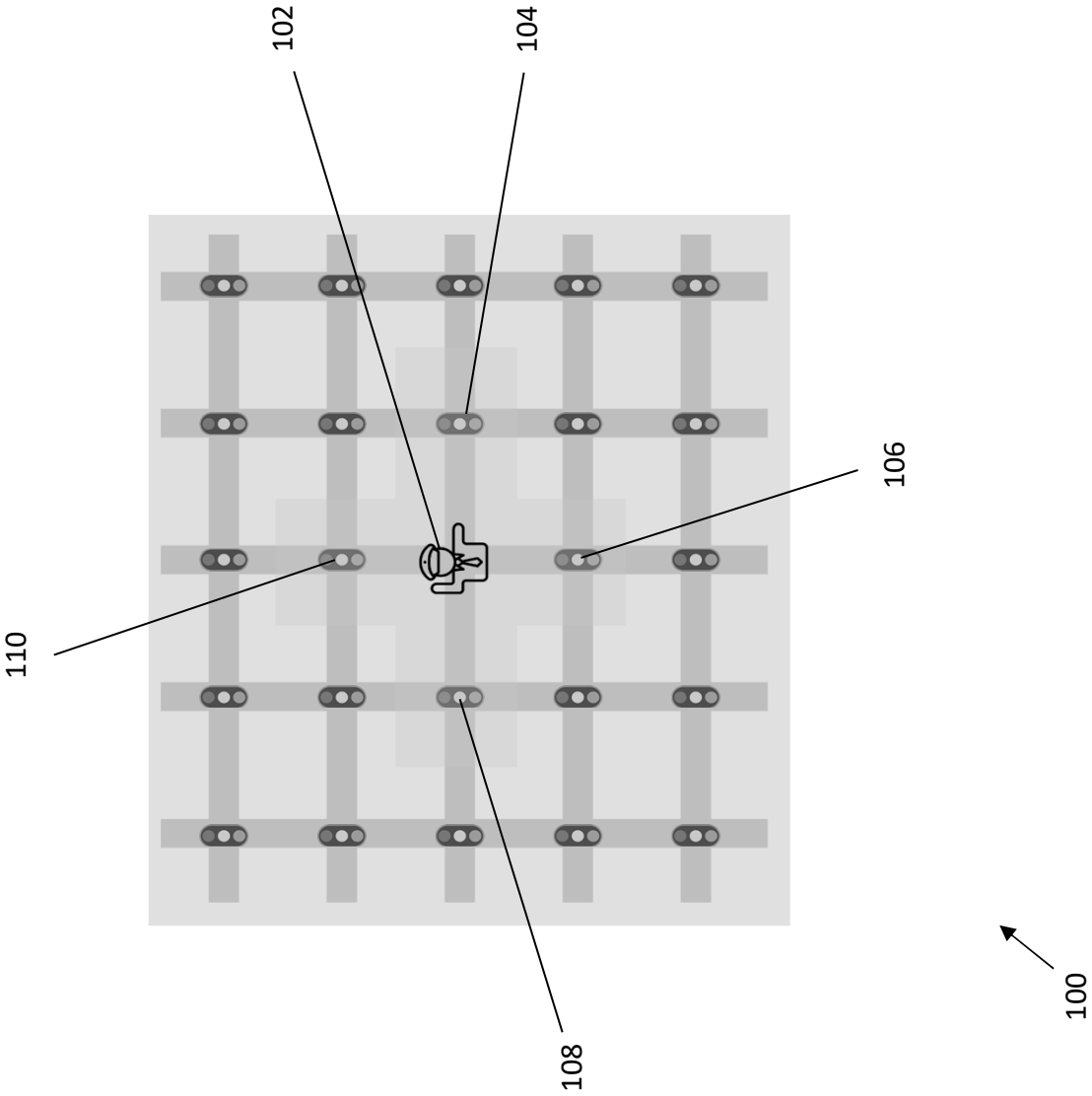

Fig. 1

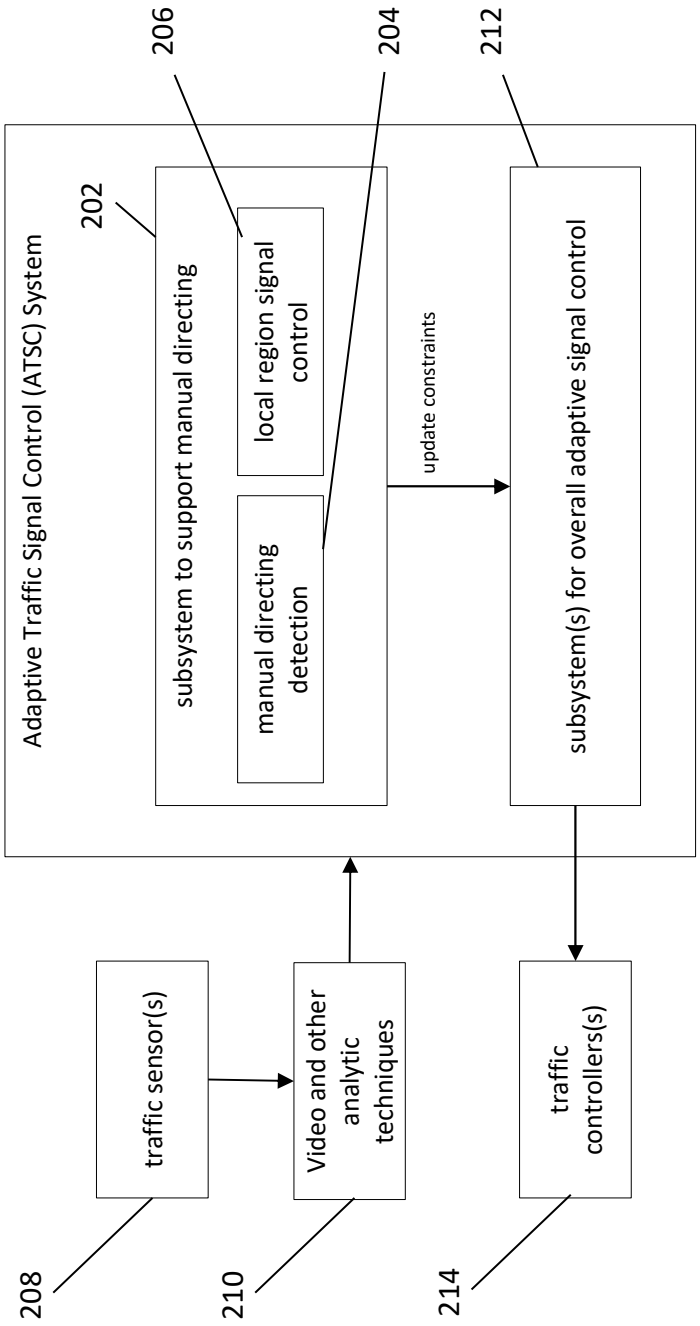
Adaptive Traffic Signal Control (ATSC) System
202
subsystem to support manual directing
206
local region signal control
204
manual directing detection
update constraints
212
subsystem(s) for overall adaptive signal control
traffic sensor(s)
208
Video and other analytic techniques
210
traffic controllers(s)
214
200

Fig. 2



Fig. 3

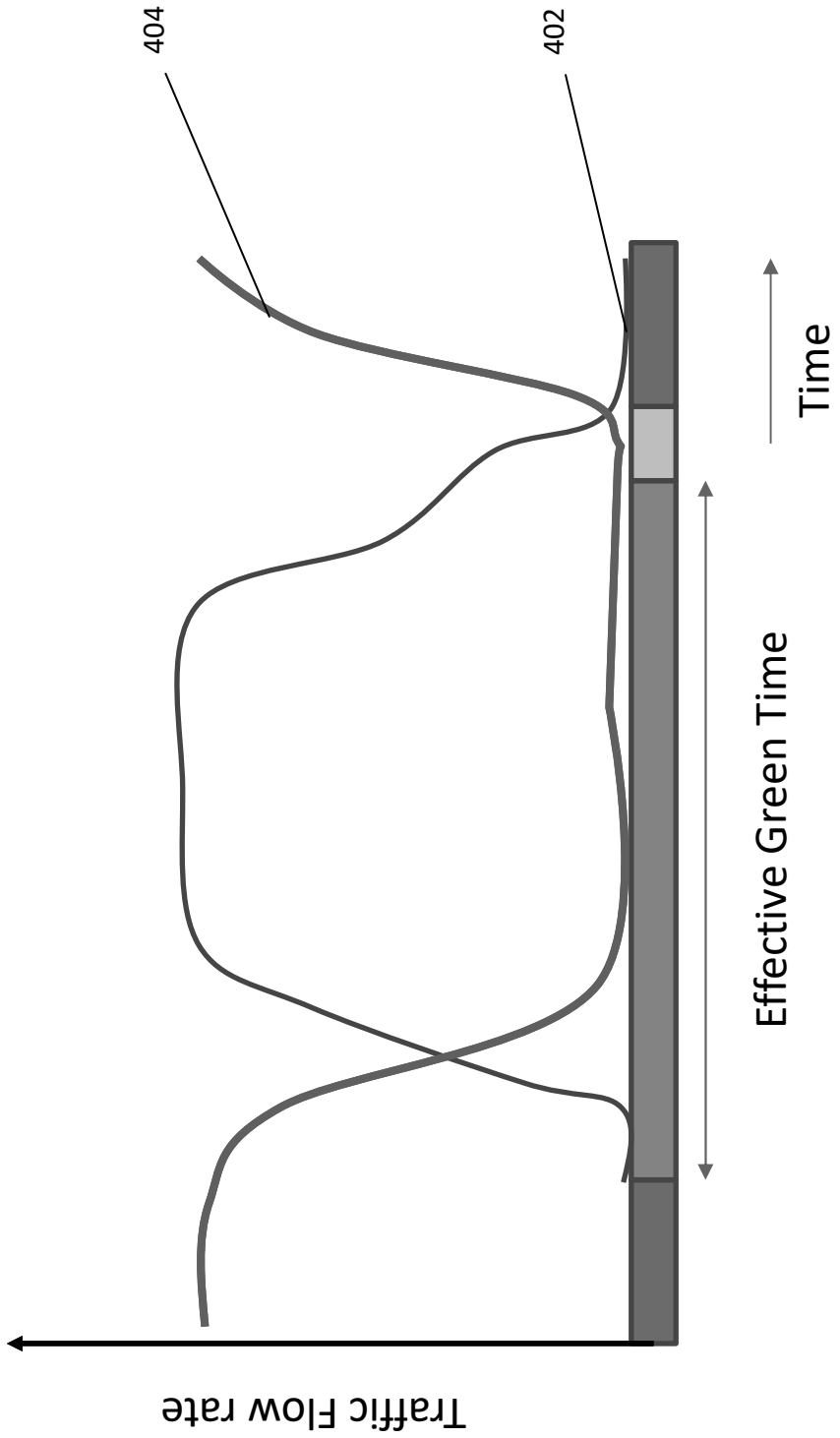

Fig. 4

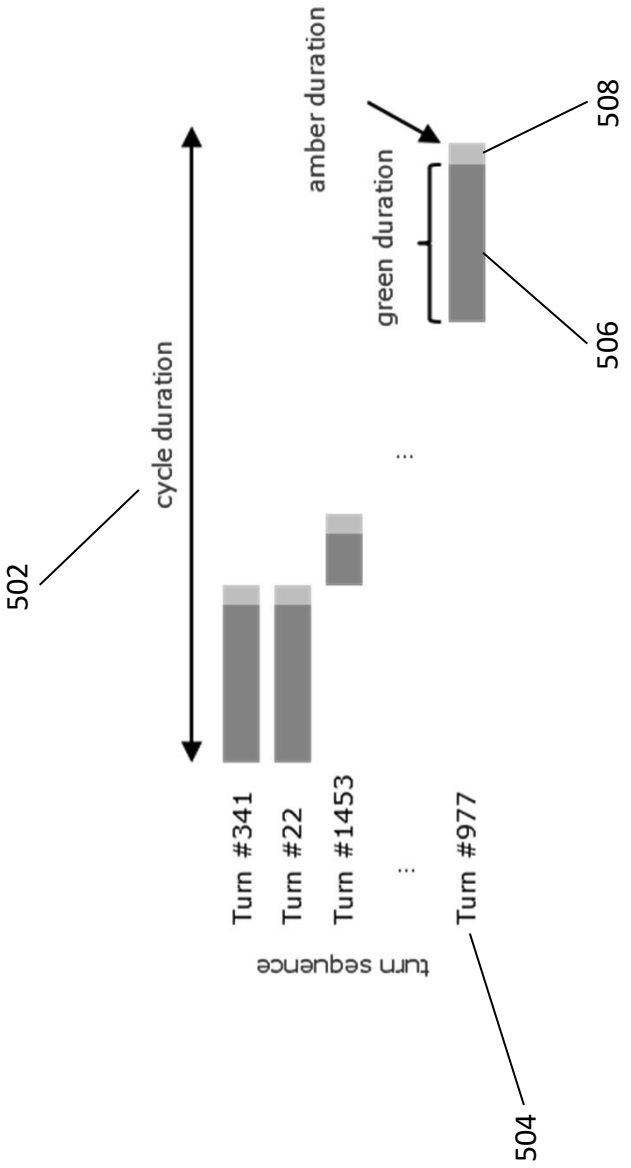
amber duration
508
green duration
506
cycle duration
502
Turn #341
Turn #22
Turn #1453
Turn #977
turn sequence
504
500

Fig. 5

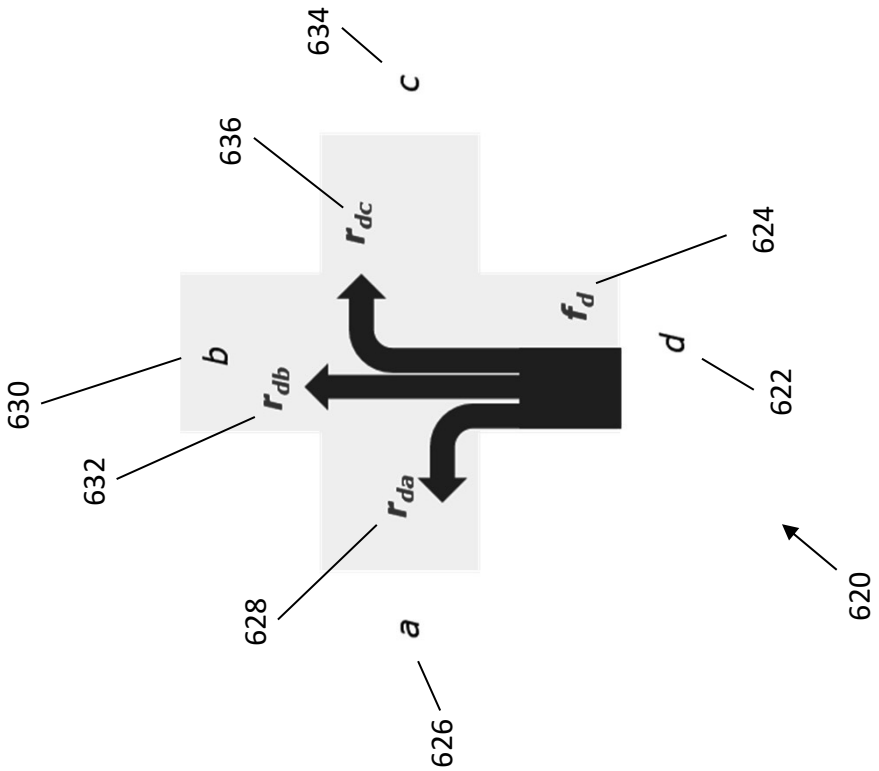
634
c
636
r_{dc}
624
f_d
630
b
r_{db}
d
622
632
r_{da}
620
628
a
626

Fig. 6B

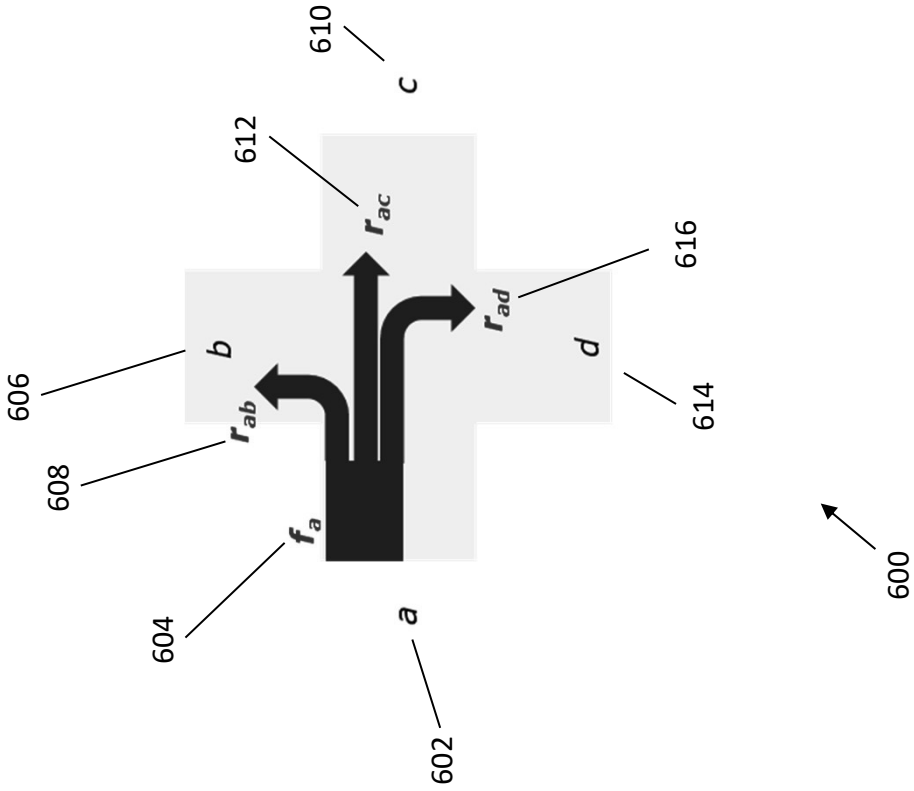
610
c
612
r_{ac}
616
r_{ad}
606
b
d
614
r_{ab}
608
f_a
604
a
602
600

Fig. 6A

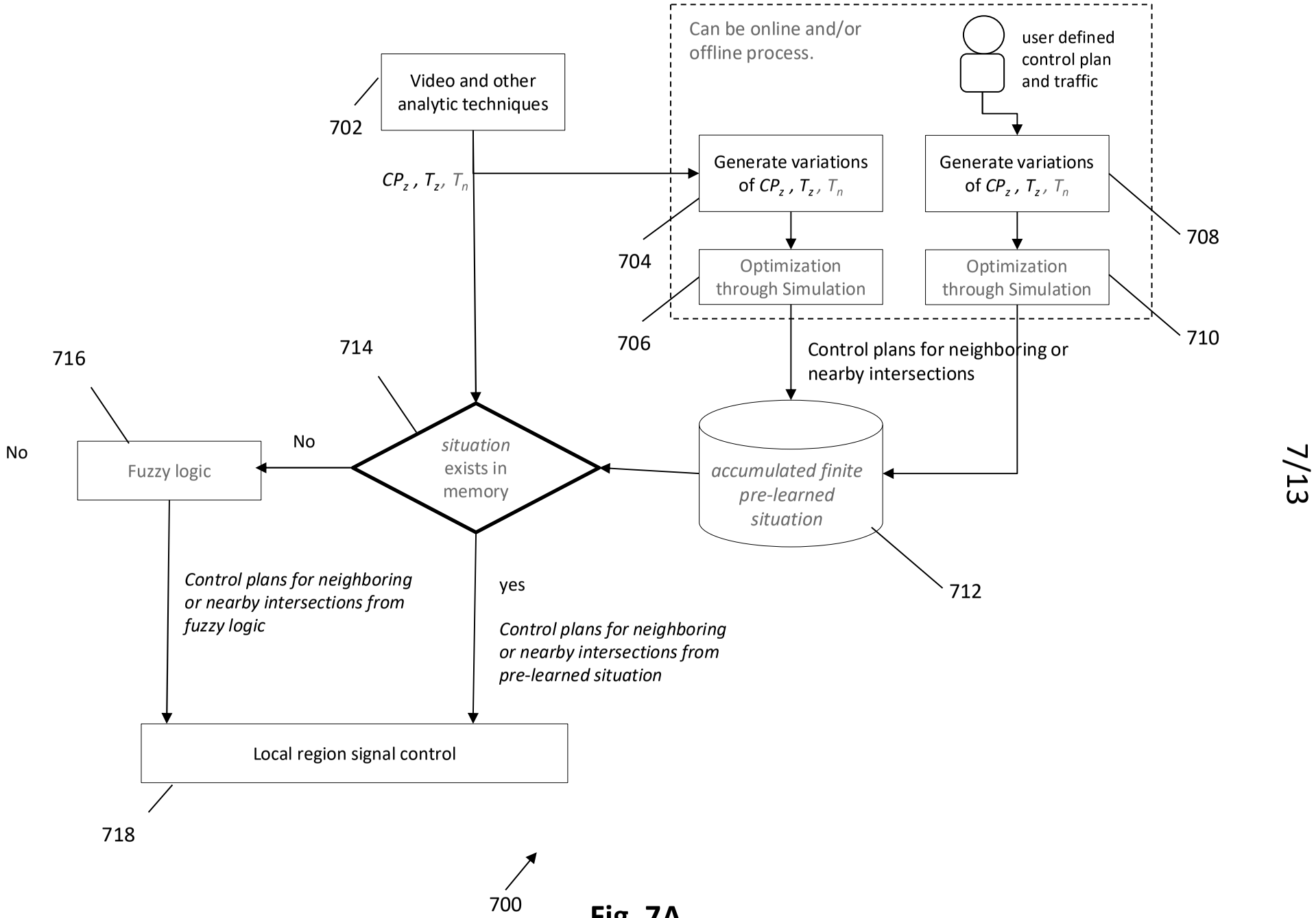
Can be online and/or offline process.
user defined control plan and traffic
Video and other analytic techniques
702
CP_z , T_z, T_n
Generate variations of CP_z , T_z, T_n
Generate variations of CP_z , T_z, T_n
704
708
Optimization through Simulation
Optimization through Simulation
706
710
Control plans for neighboring or nearby intersections
716
714
No
No
Fuzzy logic
situation exists in memory
accumulated finite pre-learned situation
712
Control plans for neighboring or nearby intersections from fuzzy logic
yes
Control plans for neighboring or nearby intersections from pre-learned situation
Local region signal control
718
700

Fig. 7A

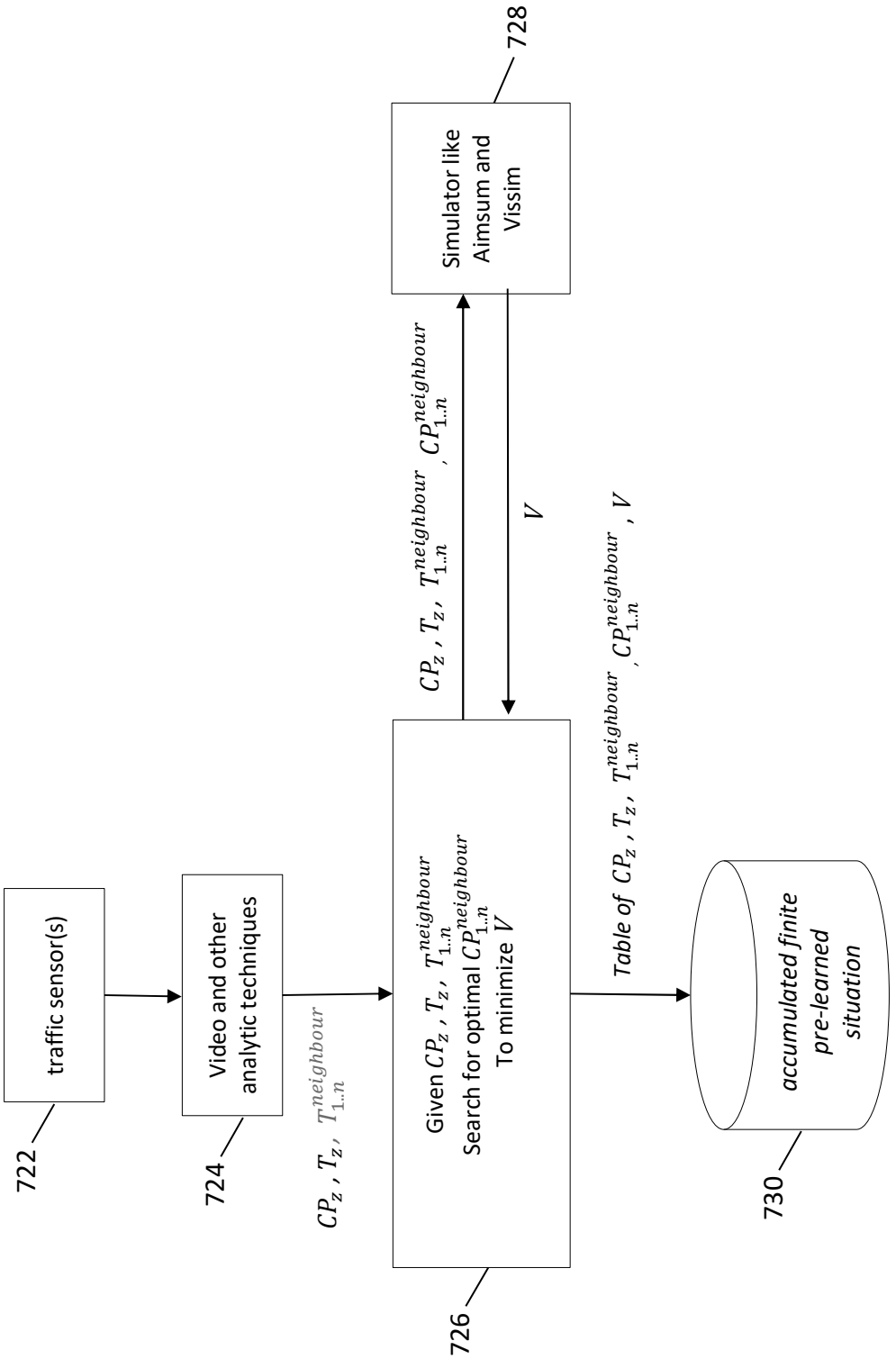
traffic sensor(s)
722
Video and other analytic techniques
724
CP_z , T_z , $T_{1..n}^{neighbour}$
Given CP_z , T_z , $T_{1..n}^{neighbour}$
Search for optimal $CP_{1..n}^{neighbour}$
To minimize V
726
CP_z , T_z , $T_{1..n}^{neighbour}$, $CP_{1..n}^{neighbour}$
V
Simulator like Aimsum and Vissim
728
Table of CP_z , T_z , $T_{1..n}^{neighbour}$, $CP_{1..n}^{neighbour}$, V
accumulated finite pre-learned situation
730
720

Fig. 7B

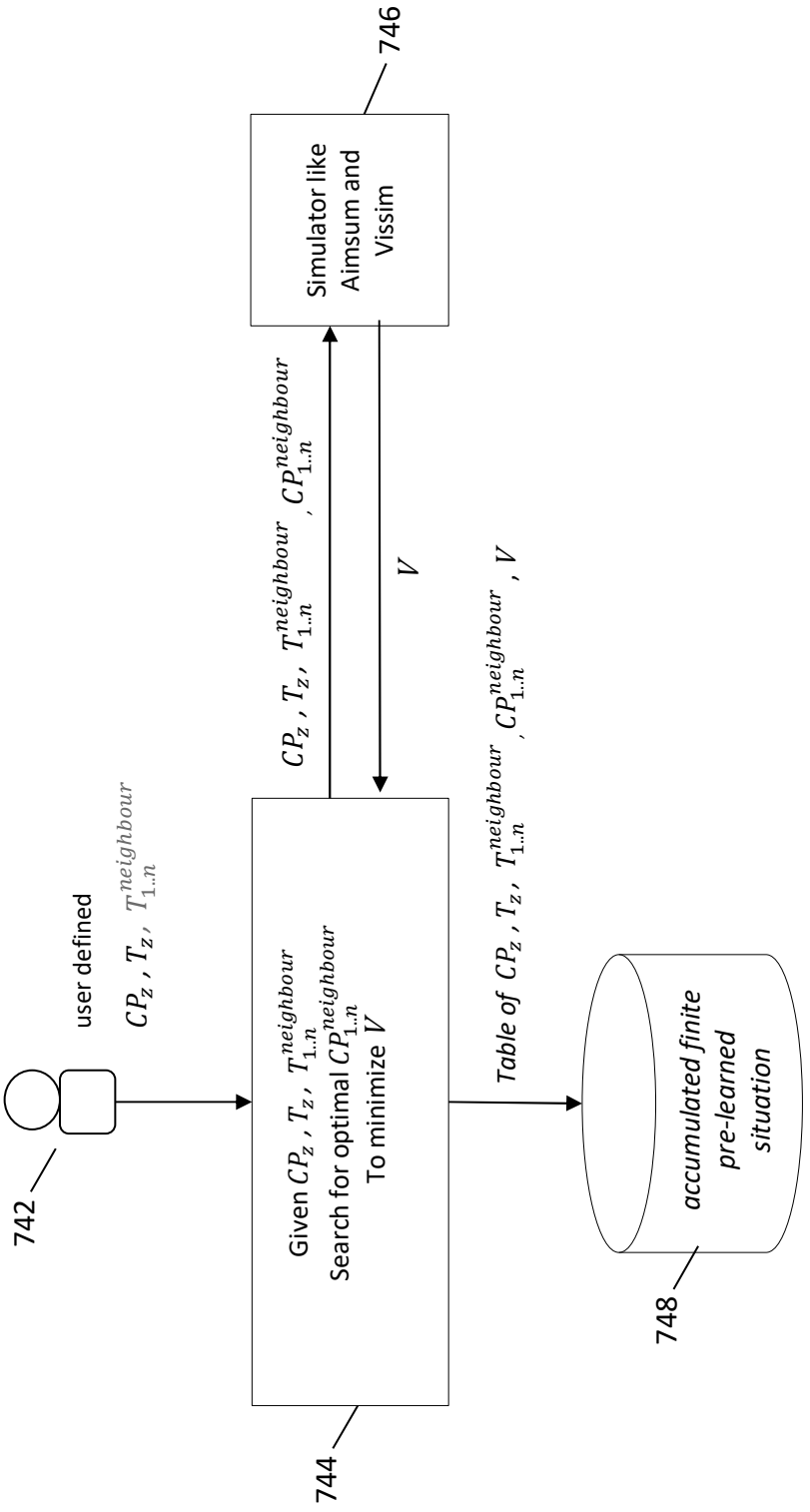
746
Simulator like Aimsum and Vissim
CP_z , T_z , $T_{1..n}^{neighbour}$, $CP_{1..n}^{neighbour}$
V
user defined
CP_z , T_z , $T_{1..n}^{neighbour}$
742
Given CP_z , T_z , $T_{1..n}^{neighbour}$
Search for optimal $CP_{1..n}^{neighbour}$
To minimize V
744
Table of CP_z , T_z , $T_{1..n}^{neighbour}$, $CP_{1..n}^{neighbour}$, V
accumulated finite pre-learned situation
748
740

Fig. 7C

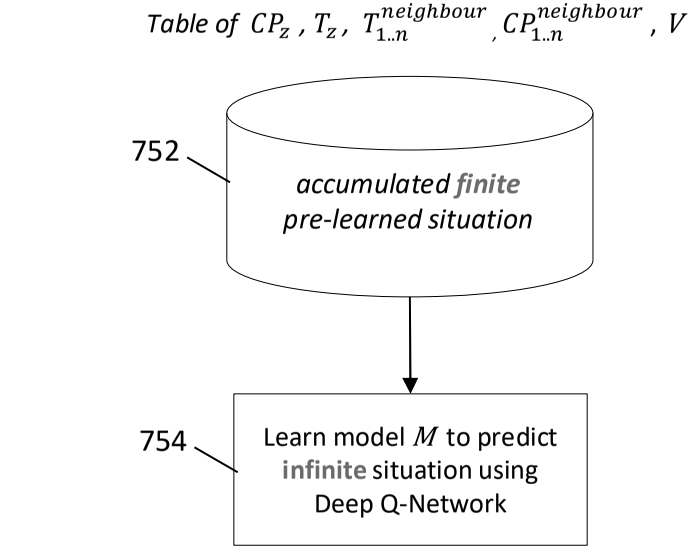
Table of CP_z , T_z , $T_{1..n}^{neighbour}$, $CP_{1..n}^{neighbour}$, V
752
accumulated finite pre-learned situation
754
Learn model M to predict infinite situation using Deep Q-Network
750

Fig. 7D

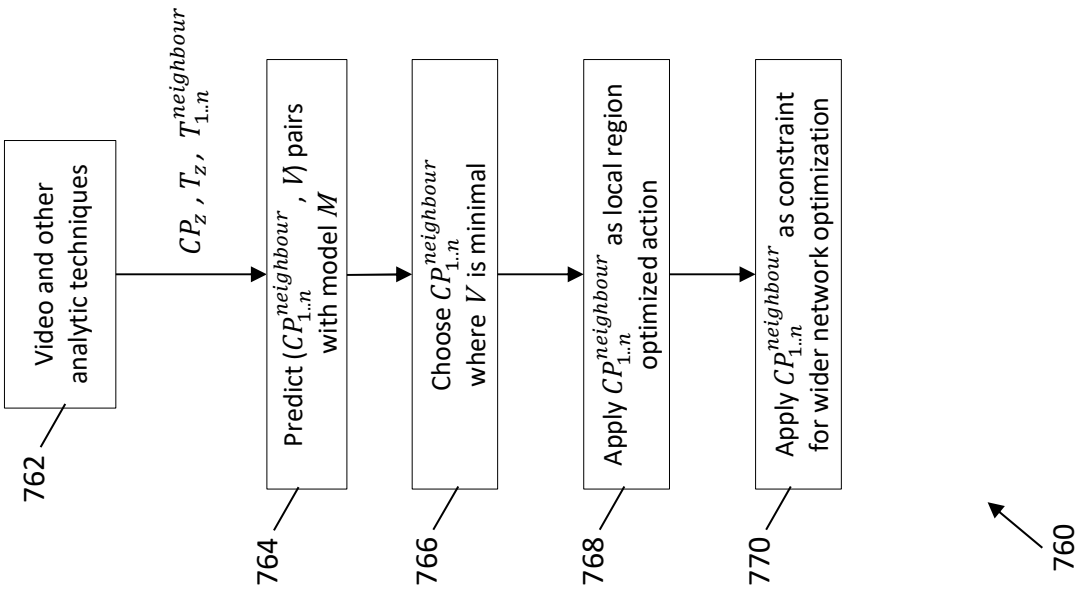
Video and other analytic techniques
762
CP_z , T_z, $T_{1..n}^{neighbour}$
Predict ($CP_{1..n}^{neighbour}$, V) pairs with model M
764
Choose $CP_{1..n}^{neighbour}$ where V is minimal
766
Apply $CP_{1..n}^{neighbour}$ as local region optimized action
768
Apply $CP_{1..n}^{neighbour}$ as constraint for wider network optimization
770
760

Fig. 7E

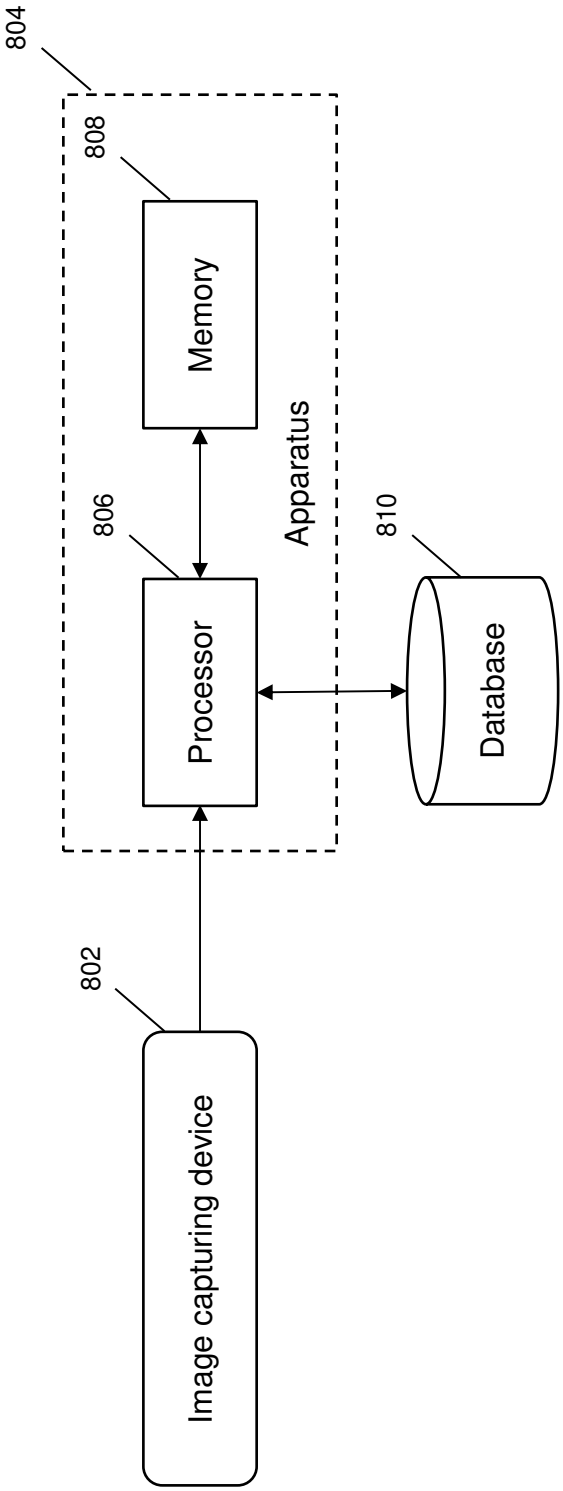
804
808
Memory
Apparatus
806
Processor
810
Database
802
Image capturing device
800

Fig. 8

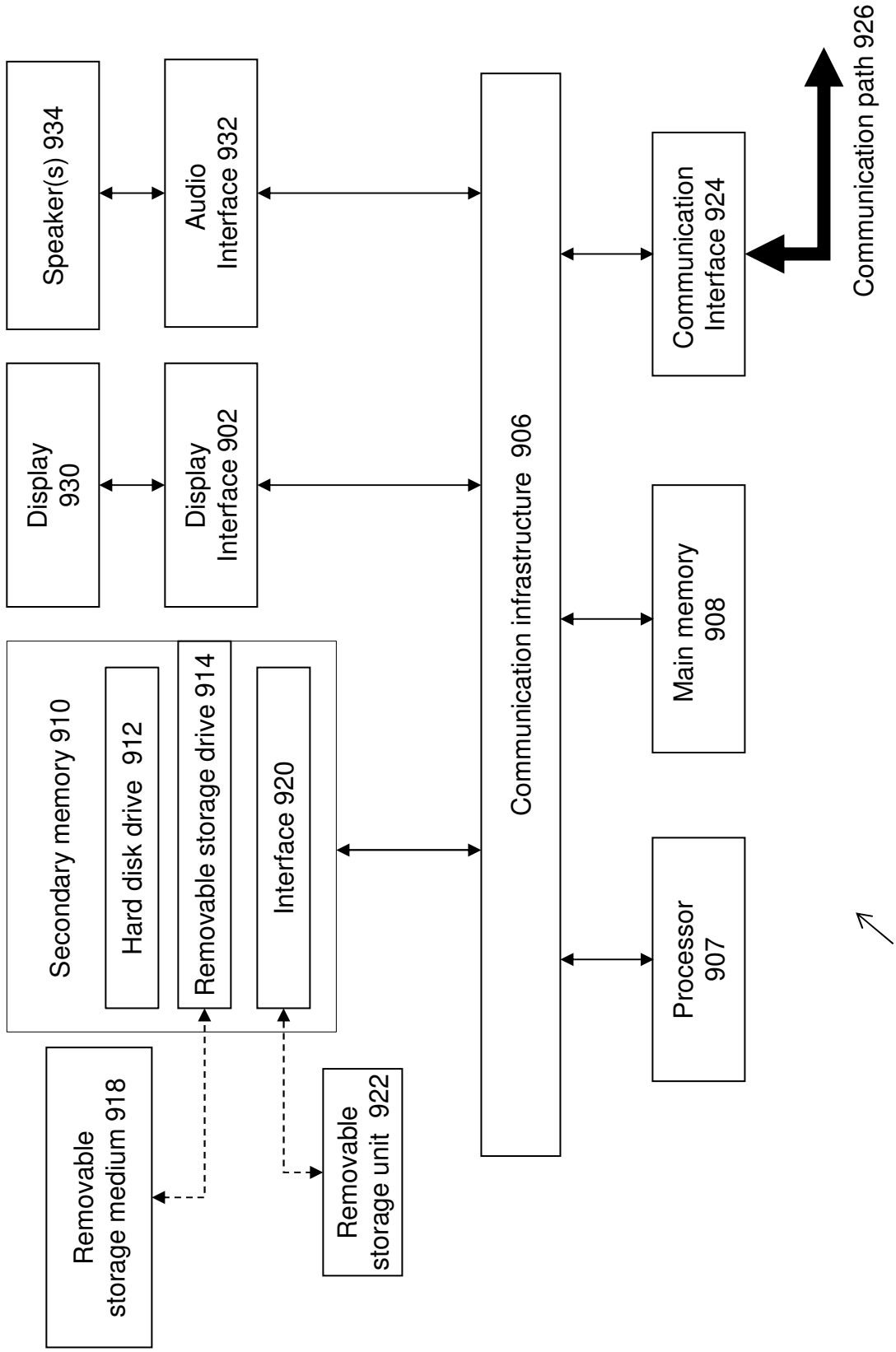
Speaker(s) 934
Audio Interface 932
Display 930
Display Interface 902
Secondary memory 910
Hard disk drive 912
Removable storage drive 914
Interface 920
Communication infrastructure 906
Main memory 908
Communication Interface 924
Communication path 926
Removable storage medium 918
Removable storage unit 922
Processor 907
900

Fig. 9