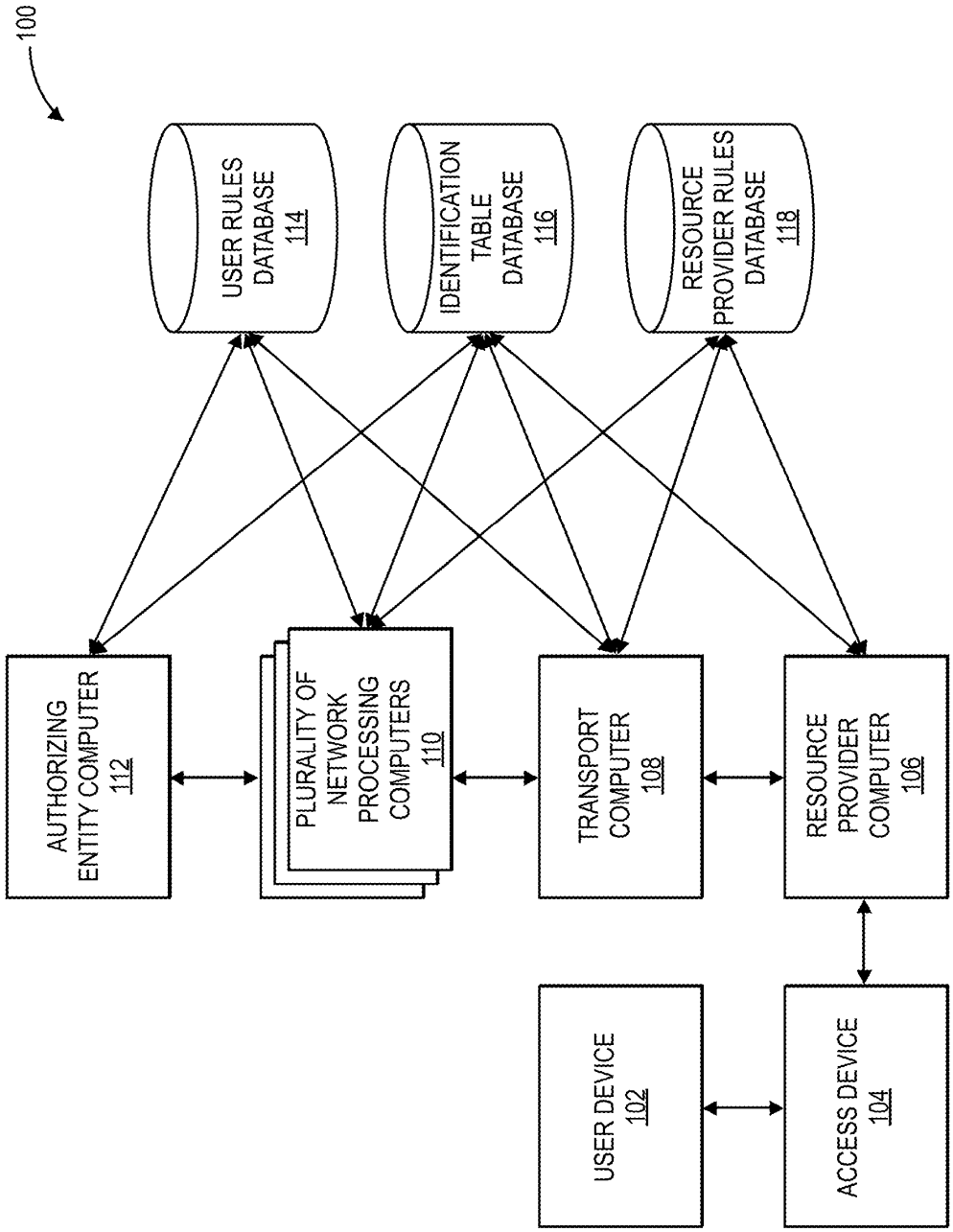
100
USER RULES DATABASE 114
IDENTIFICATION TABLE DATABASE 116
RESOURCE PROVIDER RULES DATABASE 118
AUTHORIZING ENTITY COMPUTER 112
PLURALITY OF NETWORK PROCESSING COMPUTERS 110
TRANSPORT COMPUTER 108
RESOURCE PROVIDER COMPUTER 106
USER DEVICE 102
ACCESS DEVICE 104

FIG. 1

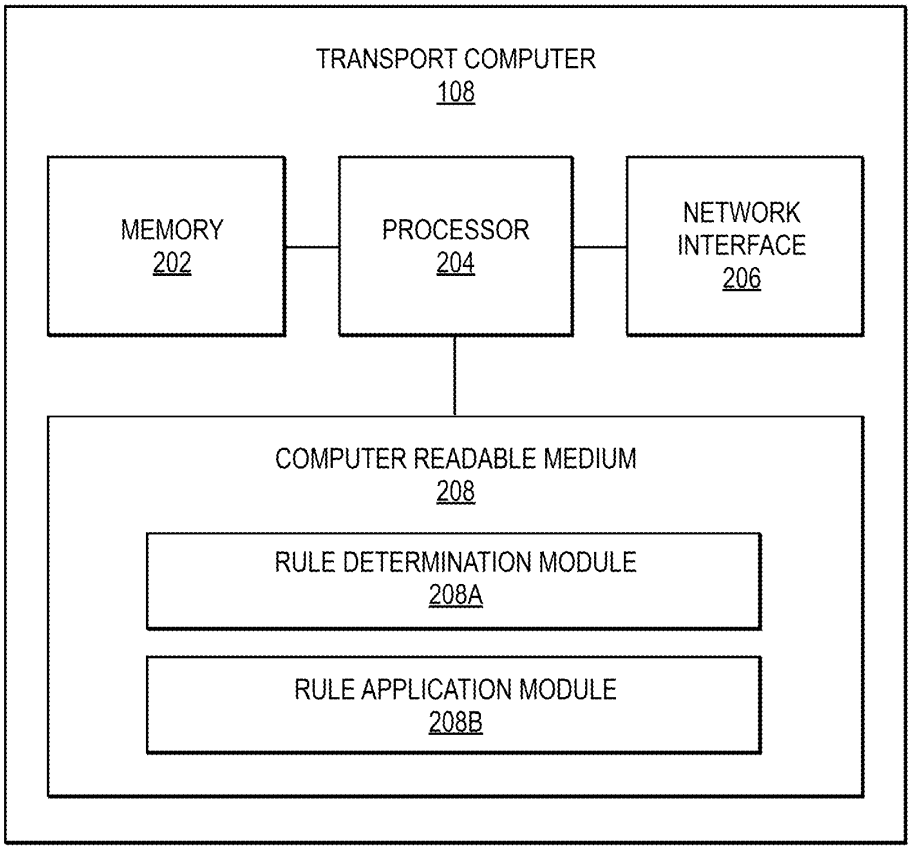
TRANSPORT COMPUTER
108
MEMORY
202
PROCESSOR
204
NETWORK
INTERFACE
206
COMPUTER READABLE MEDIUM
208
RULE DETERMINATION MODULE
208A
RULE APPLICATION MODULE
208B

FIG. 2

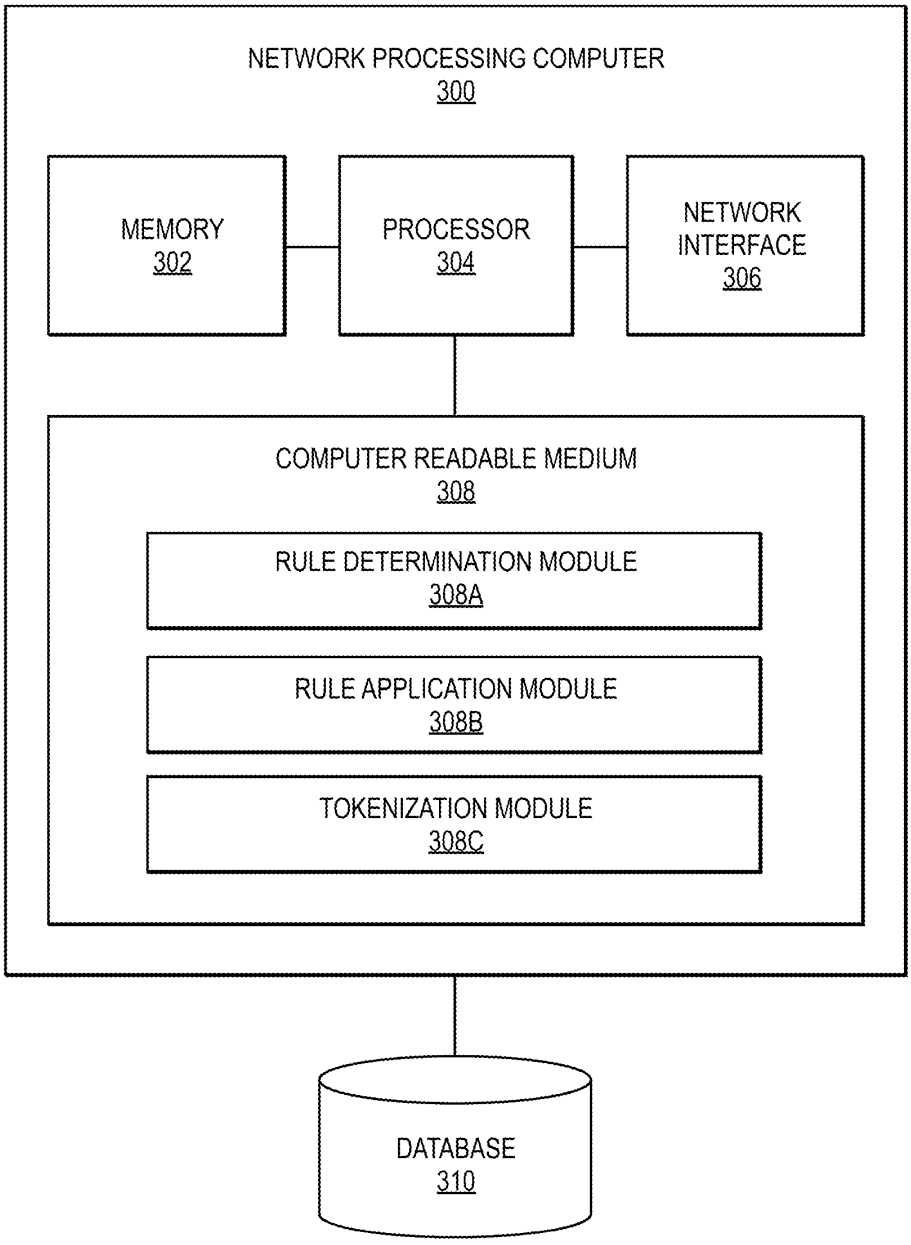
NETWORK PROCESSING COMPUTER
300
MEMORY
302
PROCESSOR
304
NETWORK
INTERFACE
306
COMPUTER READABLE MEDIUM
308
RULE DETERMINATION MODULE
308A
RULE APPLICATION MODULE
308B
TOKENIZATION MODULE
308C
DATABASE
310

FIG. 3

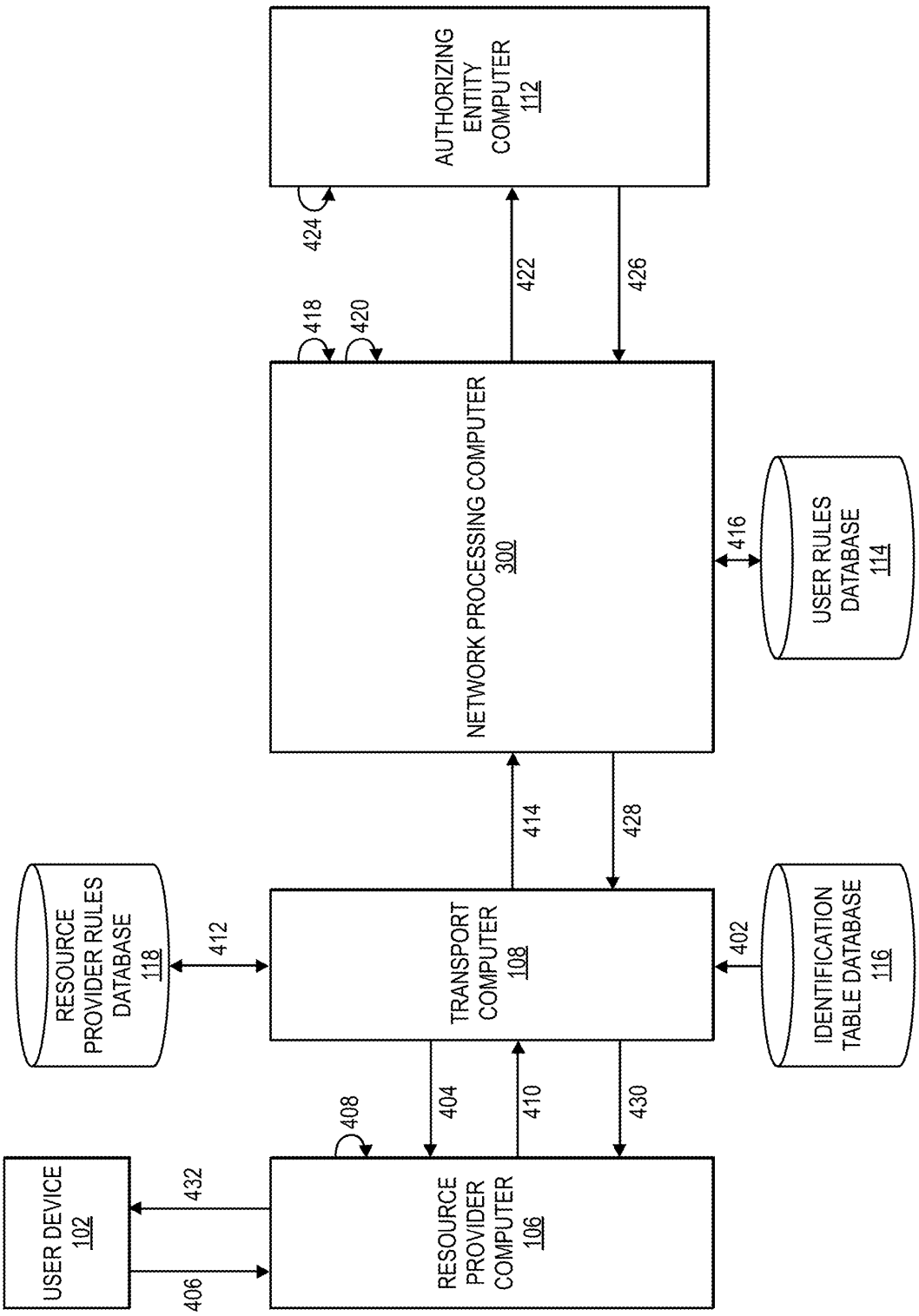
AUTHORIZING ENTITY COMPUTER 112
NETWORK PROCESSING COMPUTER 300
USER RULES DATABASE 114
RESOURCE PROVIDER RULES DATABASE 118
TRANSPORT COMPUTER 108
IDENTIFICATION TABLE DATABASE 116
USER DEVICE 102
RESOURCE PROVIDER COMPUTER 106
402
404
406
408
410
412
414
416
418
420
422
424
426
428
430
432

FIG. 4

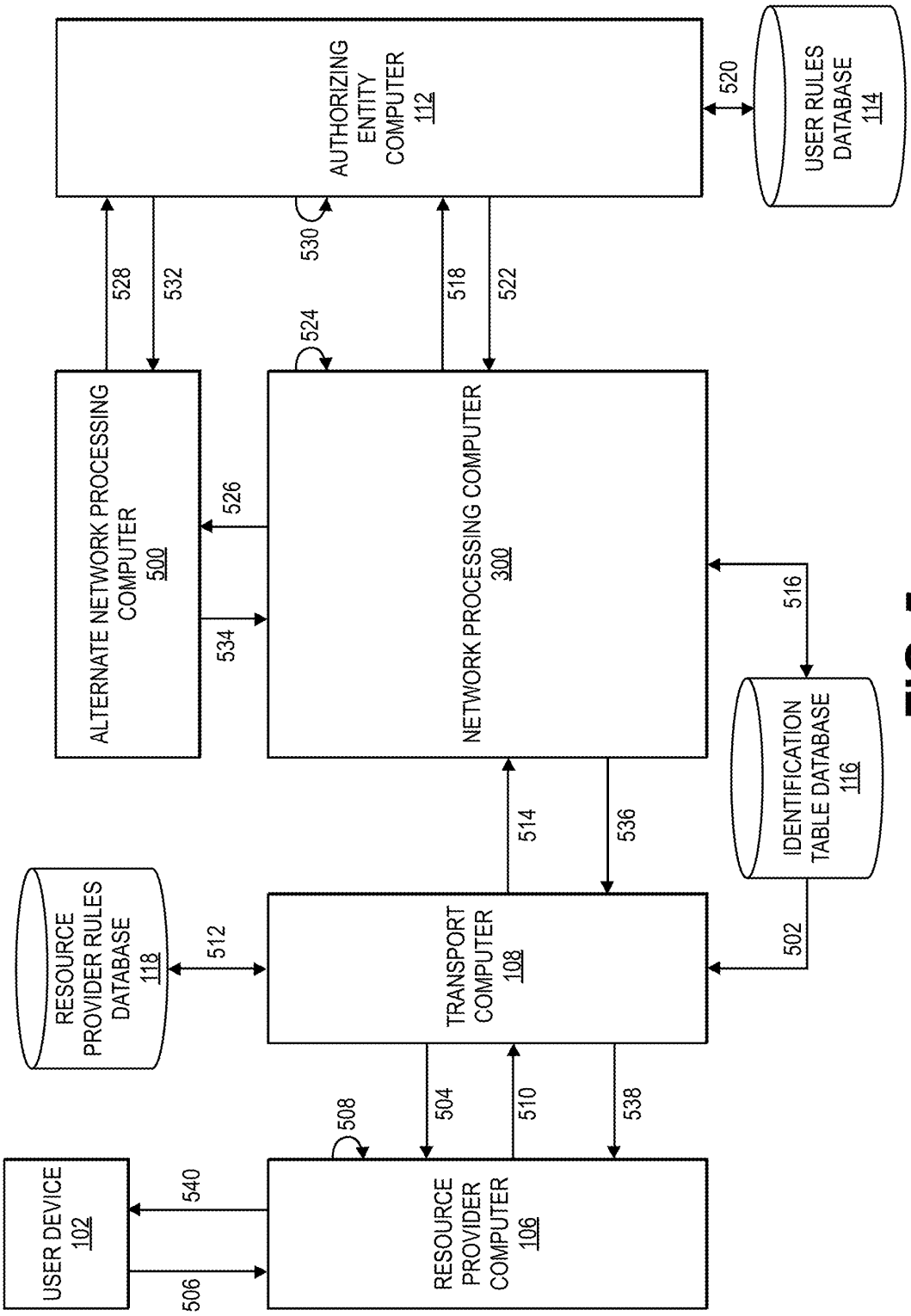
AUTHORIZING ENTITY COMPUTER 112
USER RULES DATABASE 114
520
528
532
530
518
522
524
ALTERNATE NETWORK PROCESSING COMPUTER 500
NETWORK PROCESSING COMPUTER 300
526
534
516
IDENTIFICATION TABLE DATABASE 116
RESOURCE PROVIDER RULES DATABASE 118
512
TRANSPORT COMPUTER 108
514
536
502
USER DEVICE 102
540
506
RESOURCE PROVIDER COMPUTER 106
508
504
510
538

FIG. 5