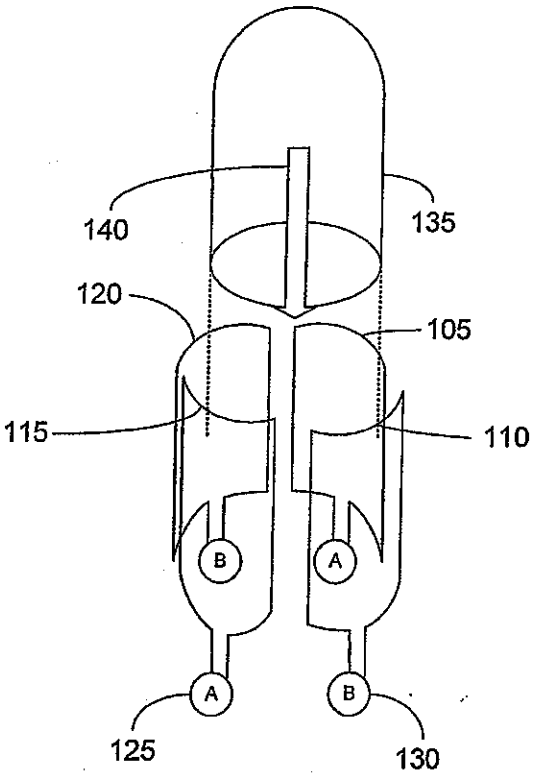


FIGURE 1

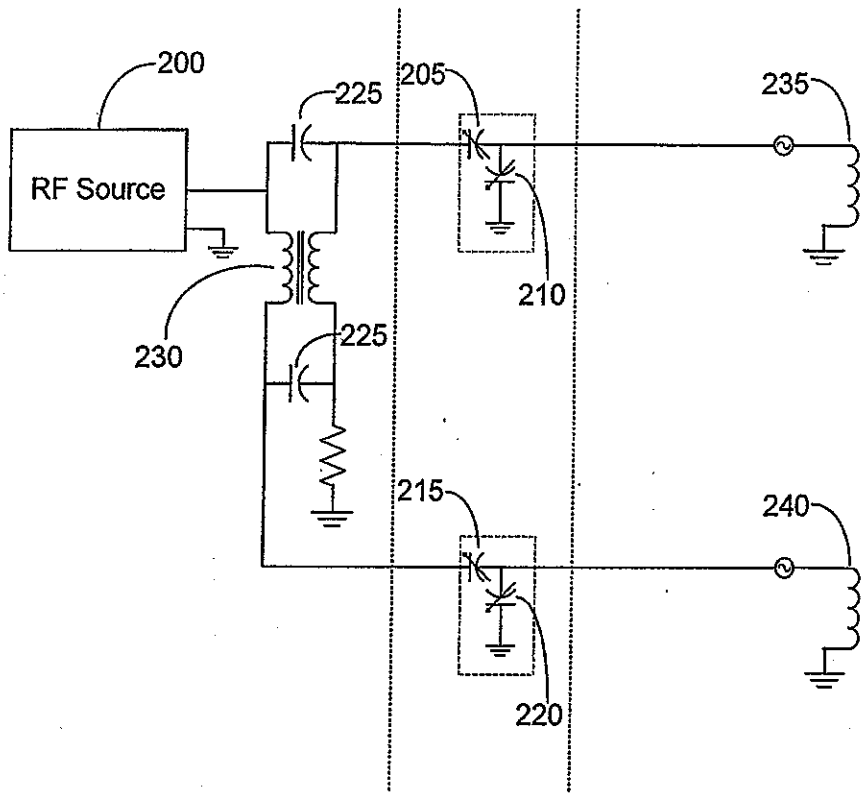


FIGURE 2

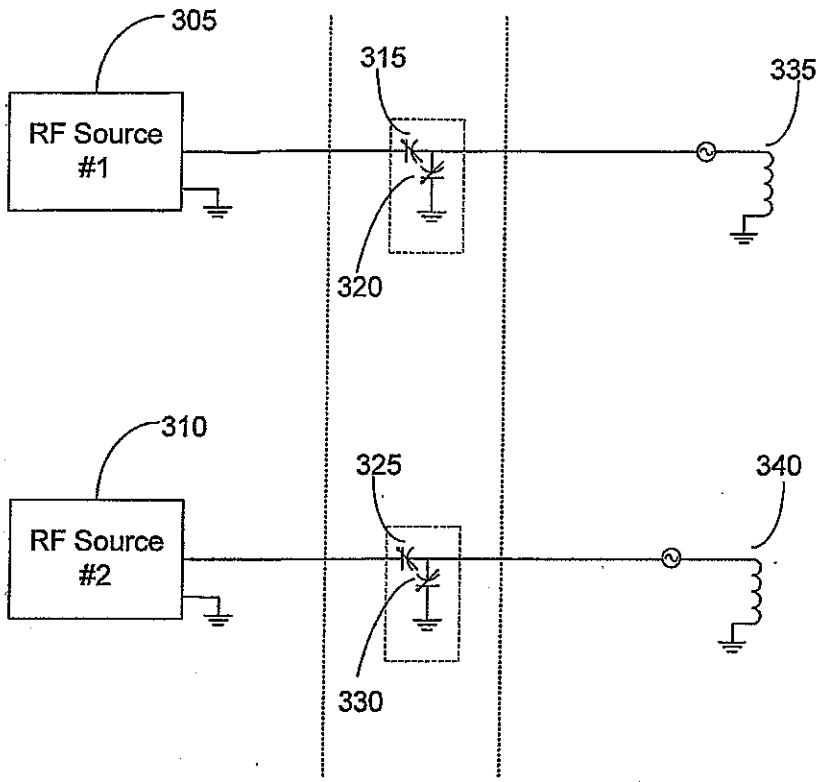


FIGURE 3

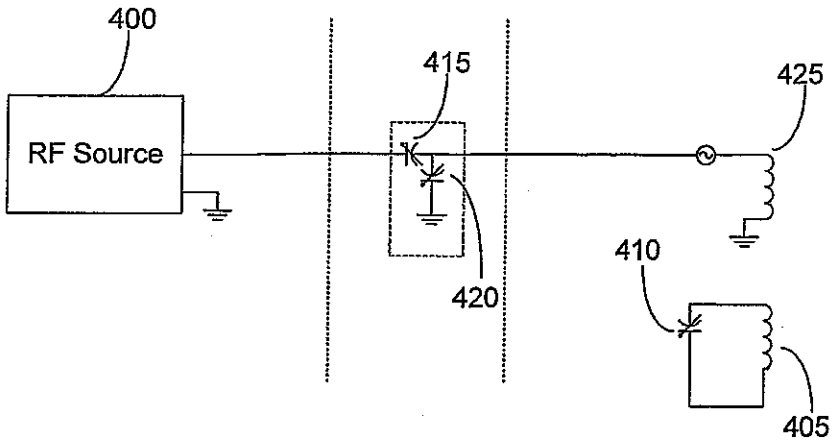


FIGURE 4

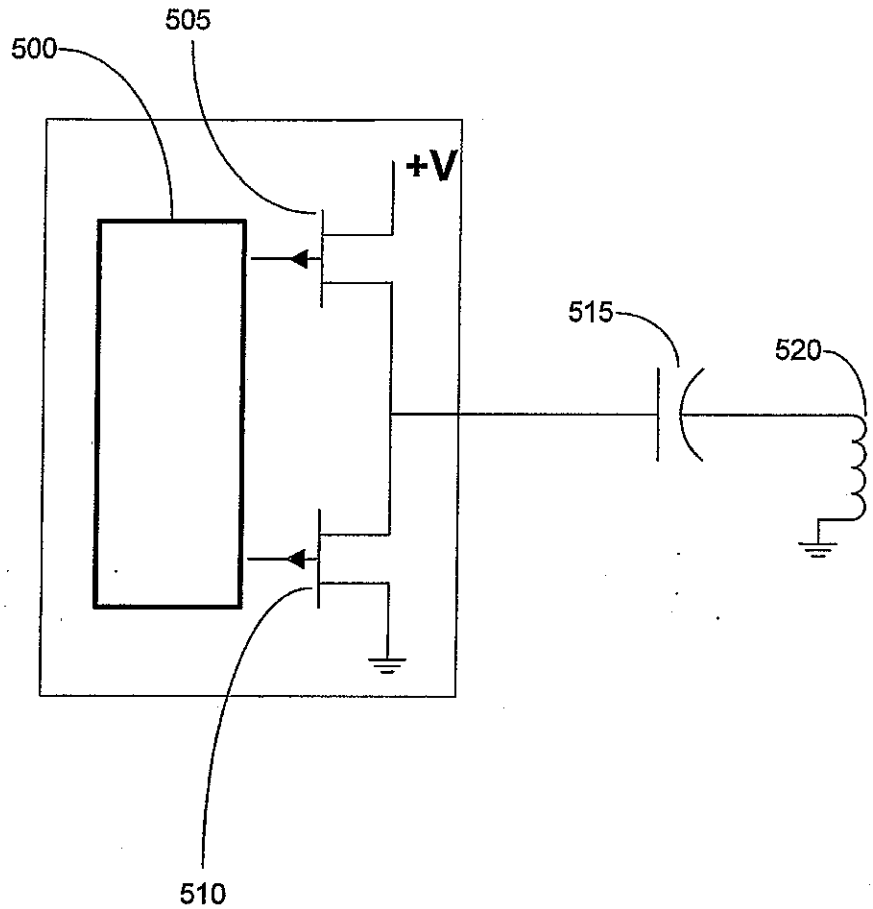


FIGURE 5

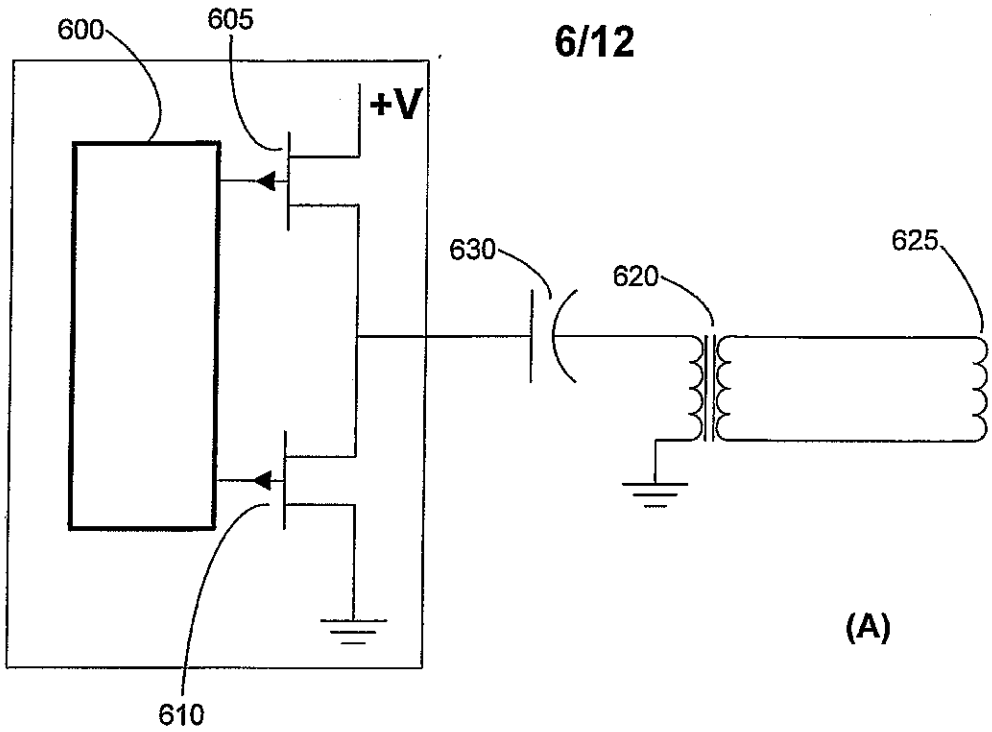


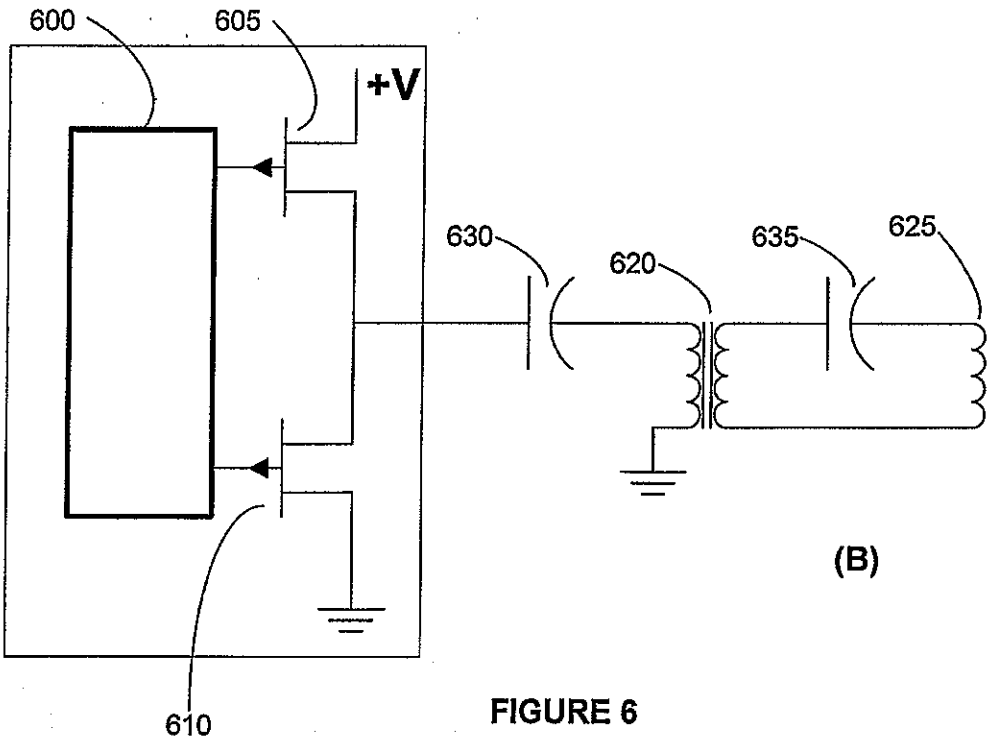


FIGURE 6

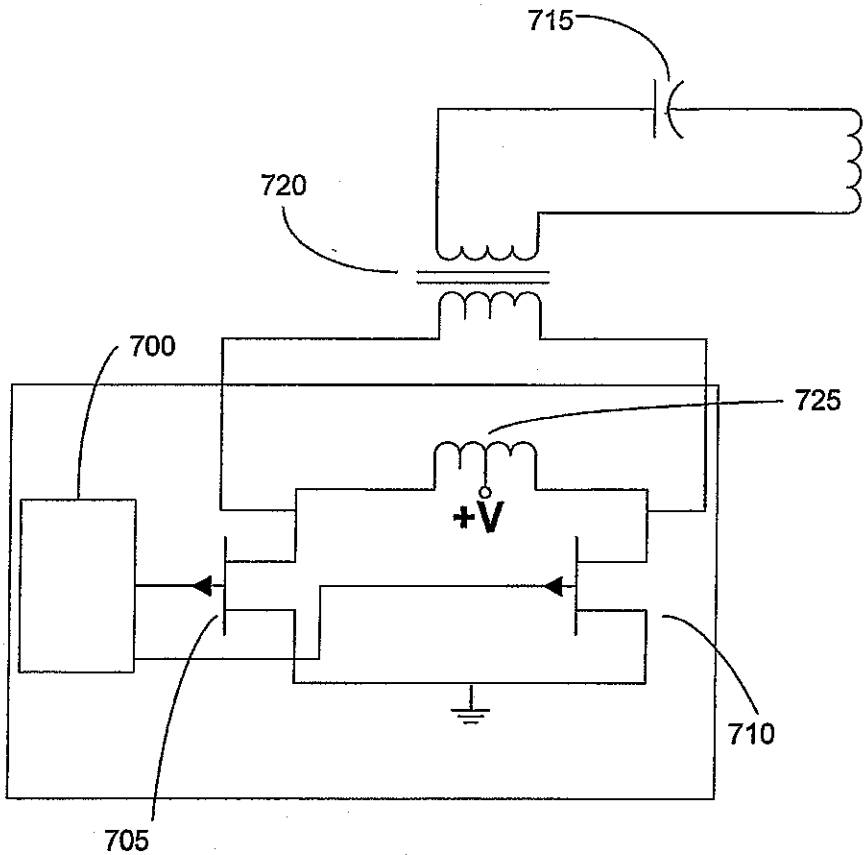


FIGURE 7

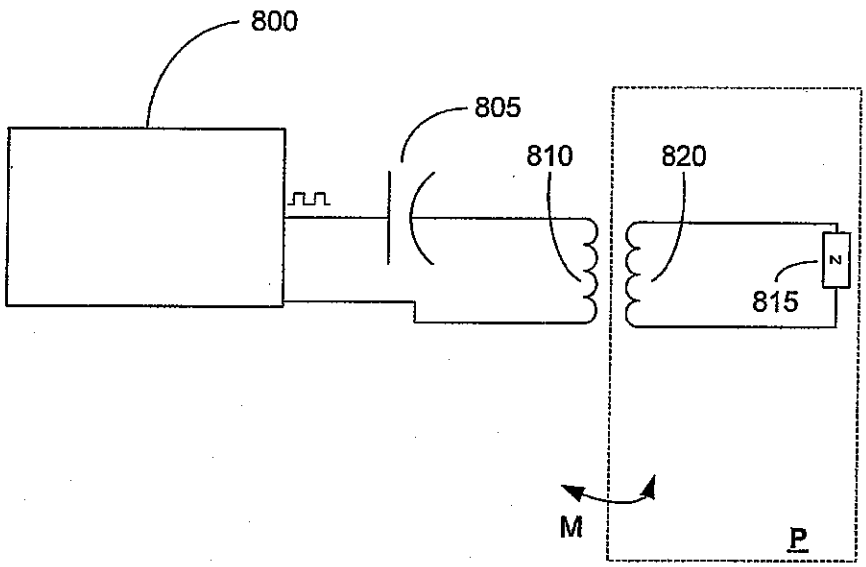


FIGURE 8

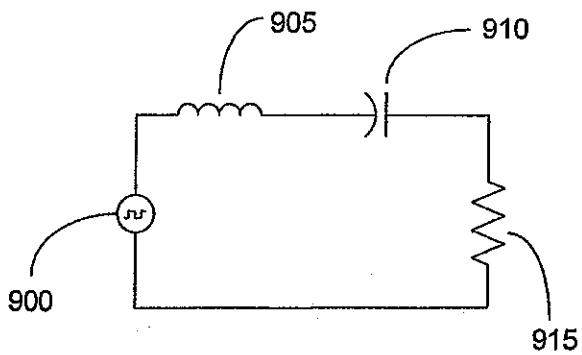


FIGURE 9

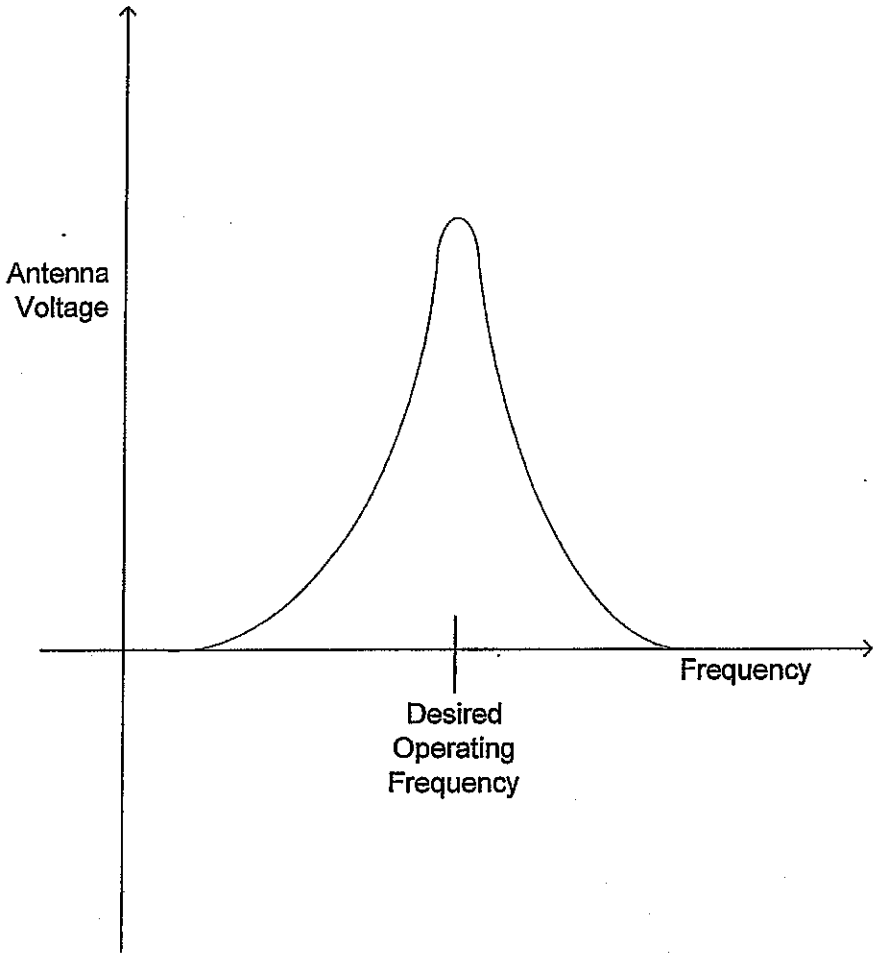


FIGURE 10

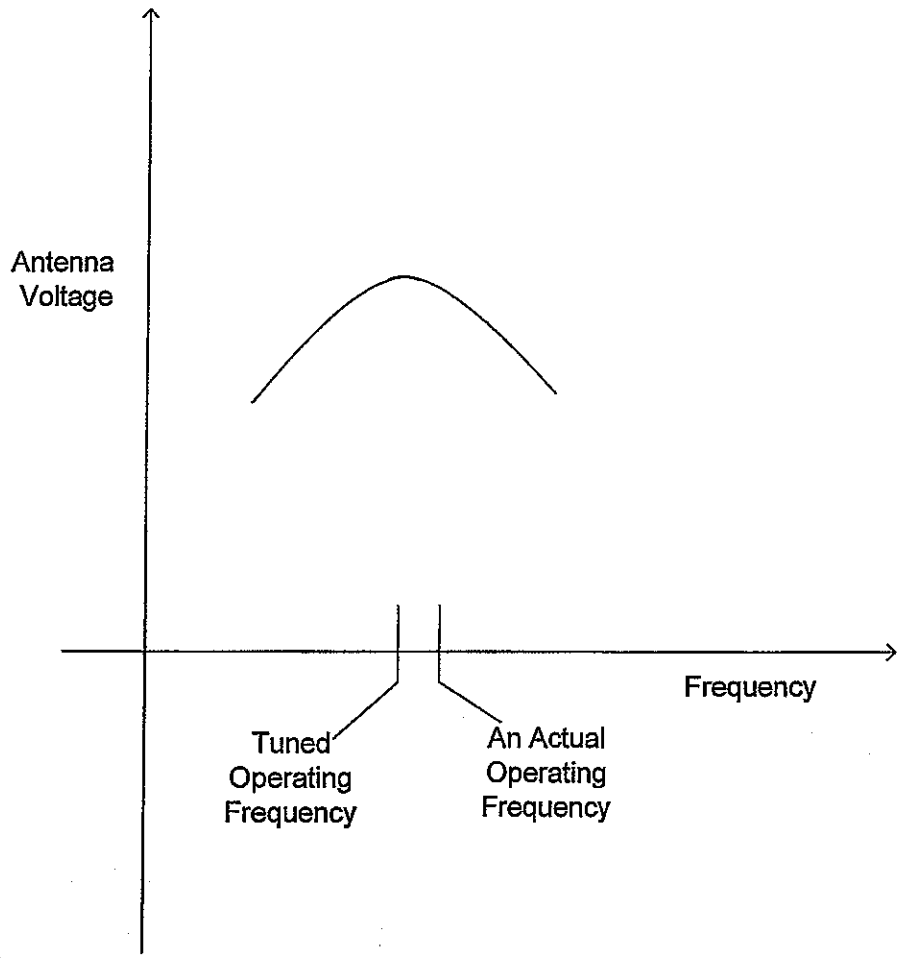
Antenna
Voltage
Frequency
Tuned
Operating
Frequency
An Actual
Operating
Frequency

FIGURE 11

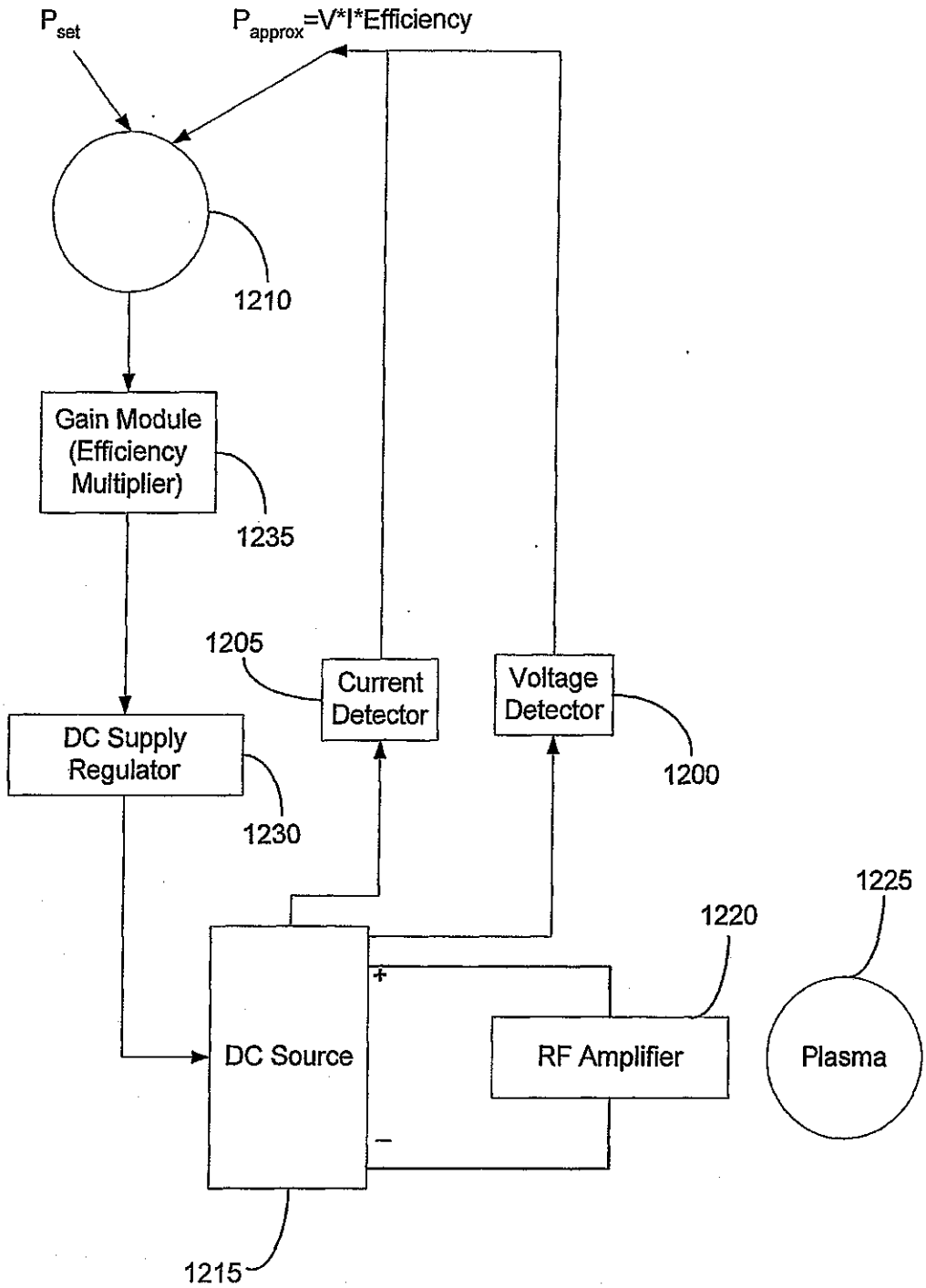
P set
P approx=V*I*Efficiency
1210
Gain Module (Efficiency Multiplier)
1235
1205
Current Detector
Voltage Detector
1200
DC Supply Regulator
1230
1225
1220
+
DC Source
RF Amplifier
Plasma
–
1215

FIGURE 12