(12) INTERNATIONAL APPLICATION PUBLISHED UNDER THE PATENT COOPERATION TREATY (PCT)

(19) World Intellectual Property Organization
International Bureau

(43) International Publication Date
29 March 2012 (29.03.2012)

PCT

(10) International Publication Number
WO 2012/038750 A1

(51) International Patent Classification:
B01L 7/00 (2006.01)

(21) International Application Number:
PCT/GB2011/051787

(22) International Filing Date:
22 September 2011 (22.09.2011)

(25) Filing Language: English

(26) Publication Language: English

(30) Priority Data:
1016014.1 24 September 2010 (24.09.2010) GB

(71) Applicant *(for all designated States except US)*: **Epistem Limited** [GB/GB]; 48 Grafton Street, Manchester M13 9XX (GB).

(72) Inventor; and

(75) Inventor/Applicant *(for US only)*: **COBB, Ben** [GB/GB]; The Croft, Prestgrove, North Wraxall, Wiltshire SN14 8RY (GB).

(74) Agent: **MARKS & CLERK LLP**; 62-68 Hills Road, Cambridge, Cambridgeshire CB2 1LA (GB).

(81) Designated States *(unless otherwise indicated, for every kind of national protection available)*: AE, AG, AL, AM, AO, AT, AU, AZ, BA, BB, BG, BH, BR, BW, BY, BZ, CA, CH, CL, CN, CO, CR, CU, CZ, DE, DK, DM, DO, DZ, EC, EE, EG, ES, FI, GB, GD, GE, GH, GM, GT, HN, HR, HU, ID, IL, IN, IS, JP, KE, KG, KM, KN, KP, KR, KZ, LA, LC, LK, LR, LS, LT, LU, LY, MA, MD, ME, MG, MK, MN, MW, MX, MY, MZ, NA, NG, NI, NO, NZ, OM, PE, PG, PH, PL, PT, QA, RO, RS, RU, RW, SC, SD, SE, SG, SK, SL, SM, ST, SV, SY, TH, TJ, TM, TN, TR, TT, TZ, UA, UG, US, UZ, VC, VN, ZA, ZM, ZW.

(84) Designated States *(unless otherwise indicated, for every kind of regional protection available)*: ARIPO (BW, GH, GM, KE, LR, LS, MW, MZ, NA, SD, SL, SZ, TZ, UG, ZM, ZW), Eurasian (AM, AZ, BY, KG, KZ, MD, RU, TJ, TM), European (AL, AT, BE, BG, CH, CY, CZ, DE, DK, EE, ES, FI, FR, GB, GR, HR, HU, IE, IS, IT, LT, LU, LV, MC, MK, MT, NL, NO, PL, PT, RO, RS, SE, SI, SK, SM, TR), OAPI (BF, BJ, CF, CG, CI, CM, GA, GN, GQ, GW, ML, MR, NE, SN, TD, TG).

Published:

— *with international search report (Art. 21(3))*

(54) Title: THERMAL CYCLER

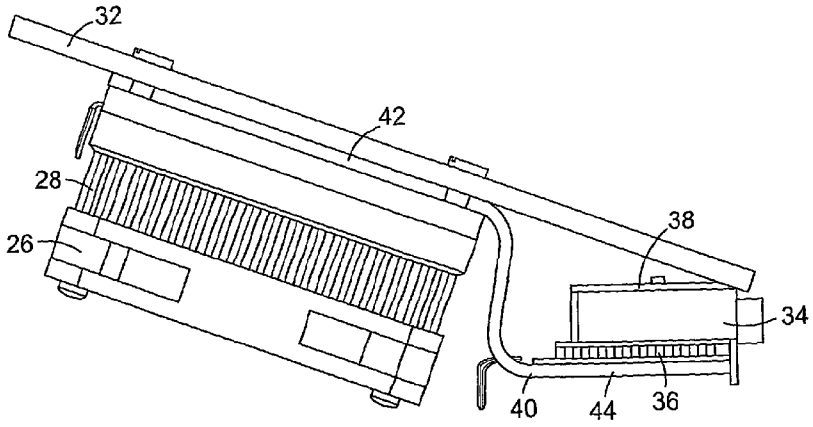

Fig. 3

(57) Abstract: We describe a thermal cycler comprising a Peltier- type thermoelectric element (36) used for cooling a sample block (34), and a non- Peltier- type heating device (38) for heating the sample block. The cycler also includes a heat sink (28) connected to the Peltier- type element by a heat pipe (40), which permits thermal energy to transfer from the Peltier- type element to the heat sink. This configuration operates more efficiently than conventional thermal cyclers which use Peltier- type elements for heating and cooling, and allows a more rapid cycling time as well as operation in a wider range of ambient temperatures. Certain embodiments utilise the Peltier- type element as a thermal gate to reduce thermal loss during heating when the Peltier- type element is switched off.

WO 2012/038750 A1