(12) INTERNATIONAL APPLICATION PUBLISHED UNDER THE PATENT COOPERATION TREATY (PCT)

(19) World Intellectual Property Organization
International Bureau

(43) International Publication Date
10 August 2006 (10.08.2006)

PCT

(10) International Publication Number
WO 2006/084061 A3

(51) International Patent Classification:
G01F 1/58 (2006.01)

(21) International Application Number:
PCT/US2006/003724

(22) International Filing Date: 2 February 2006 (02.02.2006)

(25) Filing Language: English

(26) Publication Language: English

(30) Priority Data:
11/052,005 4 February 2005 (04.02.2005) US

(71) Applicant *(for all designated States except US)*: **ENTEGRIS, INC.** [US/US]; 3500 Lyman Boulevard, Chaska, MN 55318 (US).

(72) Inventors; and
(75) Inventors/Applicants *(for US only)*: **WEHRS, David, L.** [US/US]; 16480 North Hillcrest Court, Eden Prairie, MN 55346 (US). **CHINNOCK, Robert, T.** [US/US]; 8601 Woodstone Glen, Victoria, MN 55386 (US).

(74) Agents: **THORSON, Bradley, J.** et al.; Patterson, Thuente, Skaar & Christensen, P.A., 4800 Ids Center, 80 South Eighth Street, Minneapolis, MN 55402-2100 (US).

(81) Designated States *(unless otherwise indicated, for every kind of national protection available)*: AE, AG, AL, AM, AT, AU, AZ, BA, BB, BG, BR, BW, BY, BZ, CA, CH, CN, CO, CR, CU, CZ, DE, DK, DM, DZ, EC, EE, EG, ES, FI, GB, GD, GE, GH, GM, HR, HU, ID, IL, IN, IS, JP, KE, KG, KM, KN, KP, KR, KZ, LC, LK, LR, LS, LT, LU, LV, LY, MA, MD, MG, MK, MN, MW, MX, MZ, NA, NG, NI, NO, NZ, OM, PG, PH, PL, PT, RO, RU, SC, SD, SE, SG, SK, SL, SM, SY, TJ, TM, TN, TR, TT, TZ, UA, UG, US, UZ, VC, VN, YU, ZA, ZM, ZW.

(84) Designated States *(unless otherwise indicated, for every kind of regional protection available)*: ARIPO (BW, GH, GM, KE, LS, MW, MZ, NA, SD, SL, SZ, TZ, UG, ZM, ZW), Eurasian (AM, AZ, BY, KG, KZ, MD, RU, TJ, TM), European (AT, BE, BG, CH, CY, CZ, DE, DK, EE, ES, FI, FR, GB, GR, HU, IE, IS, IT, LT, LU, LV, MC, NL, PL, PT, RO, SE, SI, SK, TR), OAPI (BF, BJ, CF, CG, CI, CM, GA, GN, GQ, GW, ML, MR, NE, SN, TD, TG).

Published:
— *with international search report*
— *before the expiration of the time limit for amending the claims and to be republished in the event of receipt of amendments*

(88) Date of publication of the international search report:
26 July 2007

For two-letter codes and other abbreviations, refer to the "Guidance Notes on Codes and Abbreviations" appearing at the beginning of each regular issue of the PCT Gazette.

(54) Title: MAGNETIC FLOW METER WITH UNIBODY CONSTRUCTION AND CONDUCTIVE POLYMER ELECTRODES

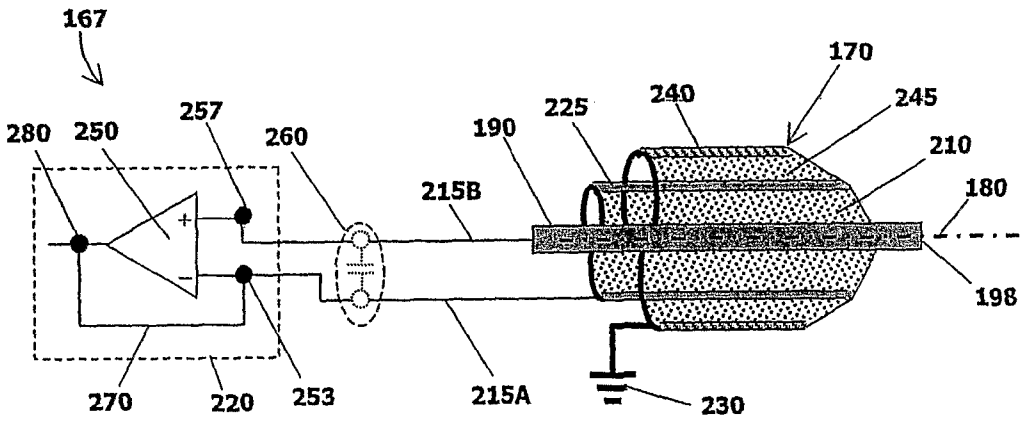

(57) Abstract: A magnetic flow metering device and method is disclosed for the measurement of corrosive flow streams. The device utilizes a unibody construction wherein the flow conduit is constructed entirely from an insulative, non-conducting material without resorting to a metallic outer housing. The portions of the electrodes in contact with the flow stream are made of a suitable conductive polymer material, resistant to the corrosive media. The electrodes also feature shields that are molded into the electrode assembly to reduce background electrical noise. The invention also utilizes an electrical configuration that actively drives the electrode shield circuit (electrodes as well as cabling) to provide a more accurate measurement of the electromotive force.

WO 2006/084061 A3