[Fig. 1]

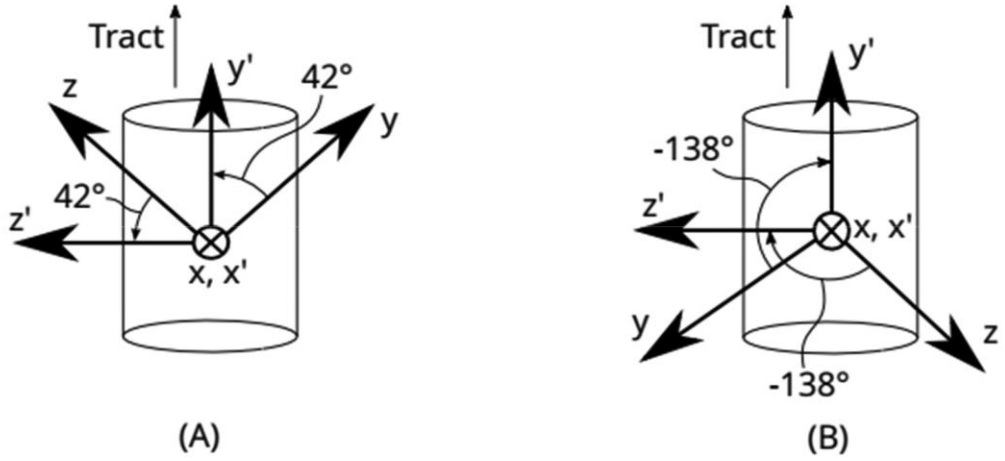
Tract
y'
z
42°
y
42°
z'
x, x'
(A)
Tract
y'
-138°
z'
x, x'
y
z
-138°
(B)

[Fig. 2]

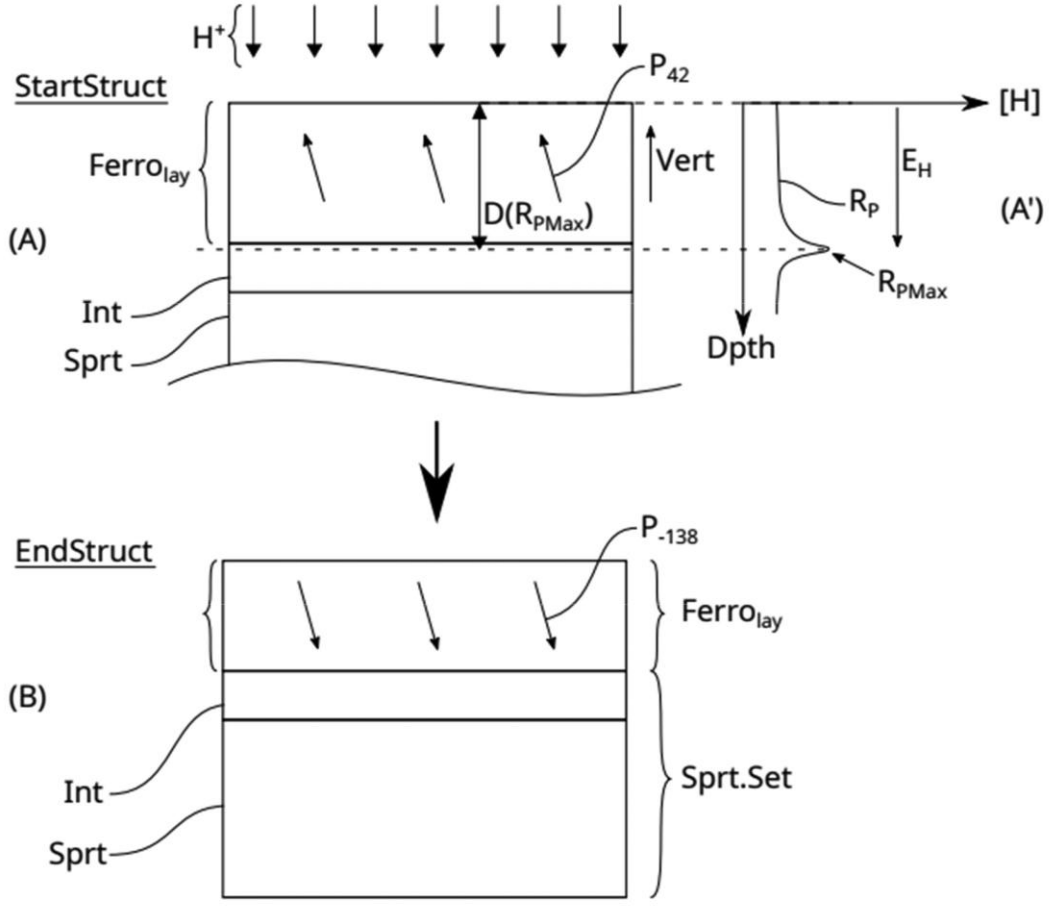
H+
StartStruct
P42
[H]
Ferrolay
Vert
EH
D(RPMax)
RP
(A')
(A)
RPMax
Int
Sprt
Dpth
EndStruct
P-138
Ferrolay
(B)
Int
Sprt
Sprt.Set

[Fig. 3]

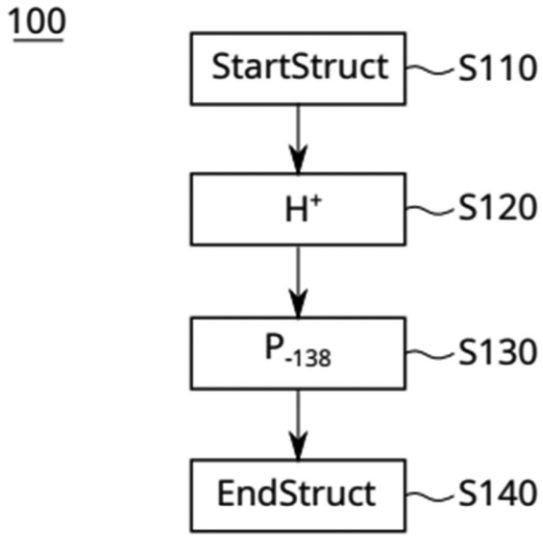
100
StartStruct
S110
H+
S120
P-138
S130
EndStruct
S140

[Fig. 4]

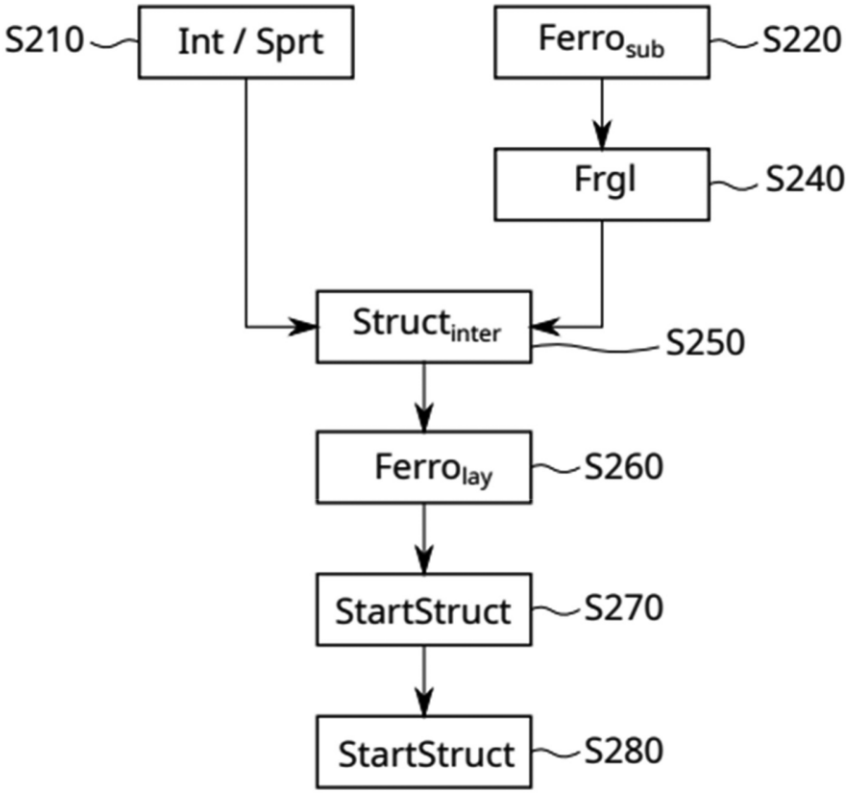
200
S210
Int / Sprt
Ferrosub
S220
Frgl
S240
Structinter
S250
Ferrolay
S260
StartStruct
S270
StartStruct
S280

[Fig. 5]

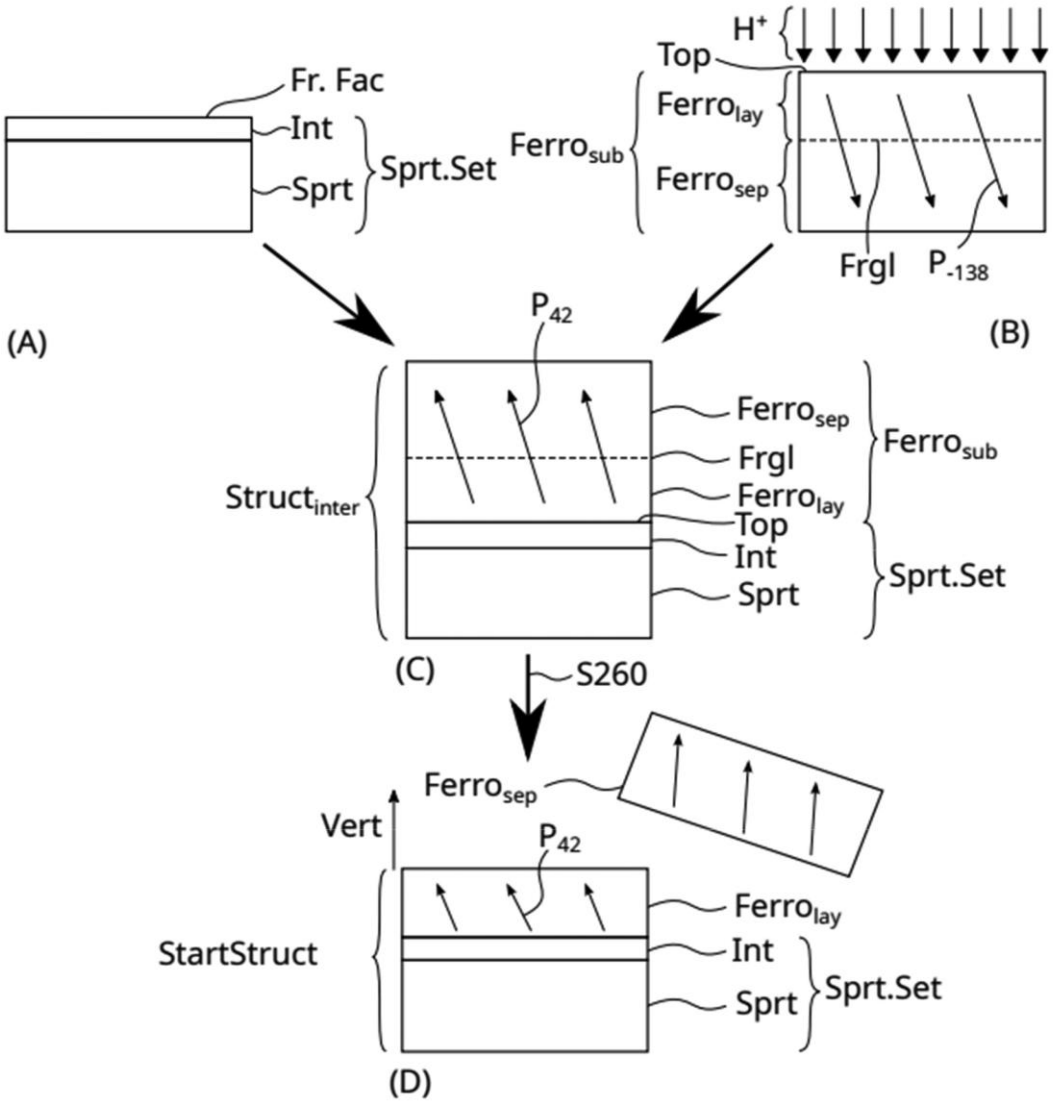
Fr. Fac
Int
Sprt
Sprt.Set
(A)
H+
Top
Ferro_lay
Ferro_sep
Ferro_sub
Frgl
P-138
(B)
P42
Ferro_sep
Frgl
Ferro_lay
Top
Int
Sprt
Ferro_sub
Sprt.Set
Struct_inter
(C)
S260
Ferro_sep
Vert
P42
Ferro_lay
Int
Sprt
Sprt.Set
StartStruct
(D)

[Fig. 6]

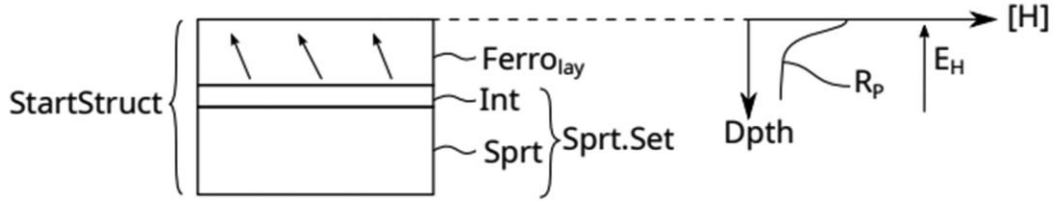
StartStruct
Ferro_lay
Int
Sprt
Sprt.Set
[H]
E_H
R_p
Dpth

[Fig. 7]

300

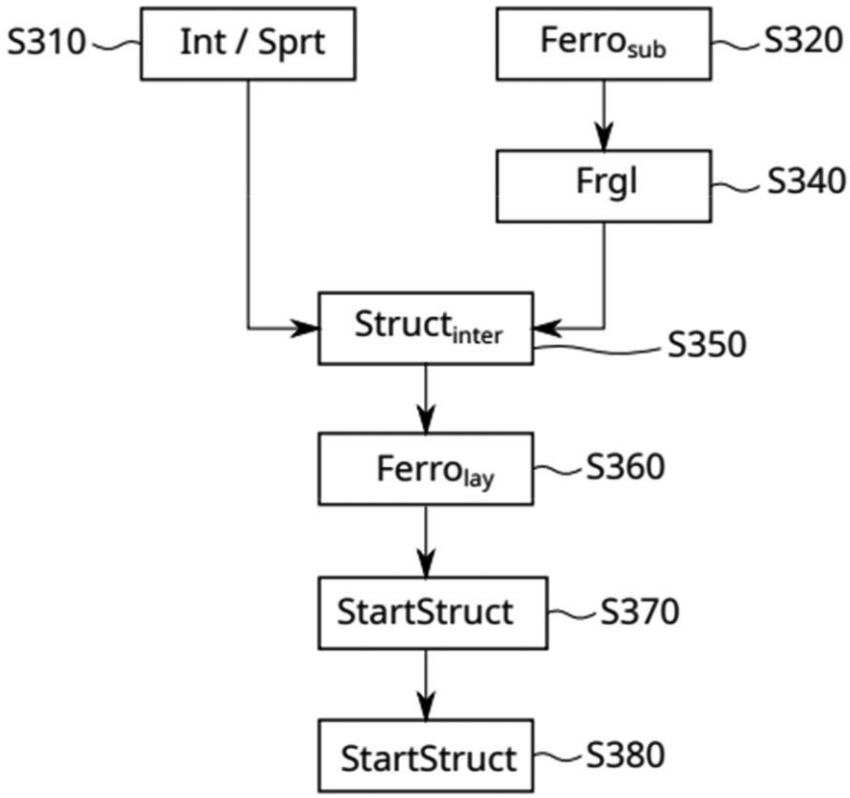
S310
Int / Sprt
Ferro$_{sub}$
S320
Frgl
S340
Struct$_{inter}$
S350
Ferro$_{lay}$
S360
StartStruct
S370
StartStruct
S380

Fig. 8

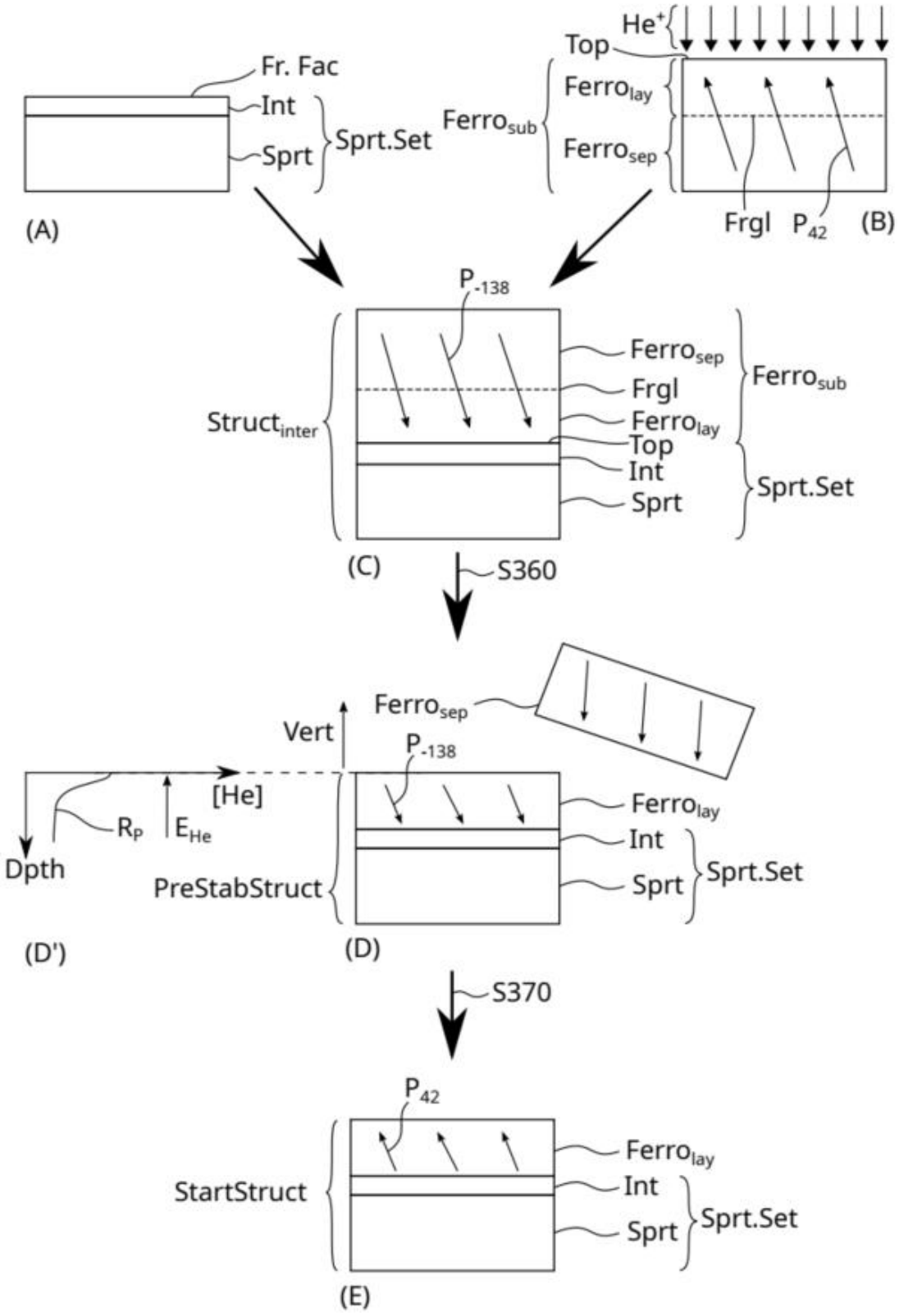
Fr. Fac
Int
Sprt
Sprt.Set
(A)
He+
Top
Ferro_lay
Ferro_sub
Ferro_sep
Frgl
P_42
(B)
P_-138
Ferro_sep
Frgl
Ferro_lay
Top
Int
Sprt
Ferro_sub
Sprt.Set
Struct_inter
(C)
S360
Ferro_sep
Vert
P_-138
[He]
R_P
E_He
Dpth
PreStabStruct
Ferro_lay
Int
Sprt
Sprt.Set
(D')
(D)
S370
P_42
Ferro_lay
Int
Sprt
Sprt.Set
StartStruct
(E)

[Fig. 9]

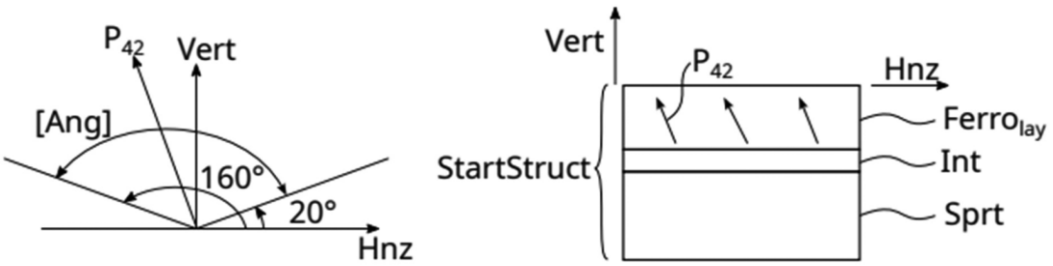
P42
Vert
[Ang]
160°
20°
Hnz
Vert
P42
Hnz
Ferrolay
StartStruct
Int
Sprt