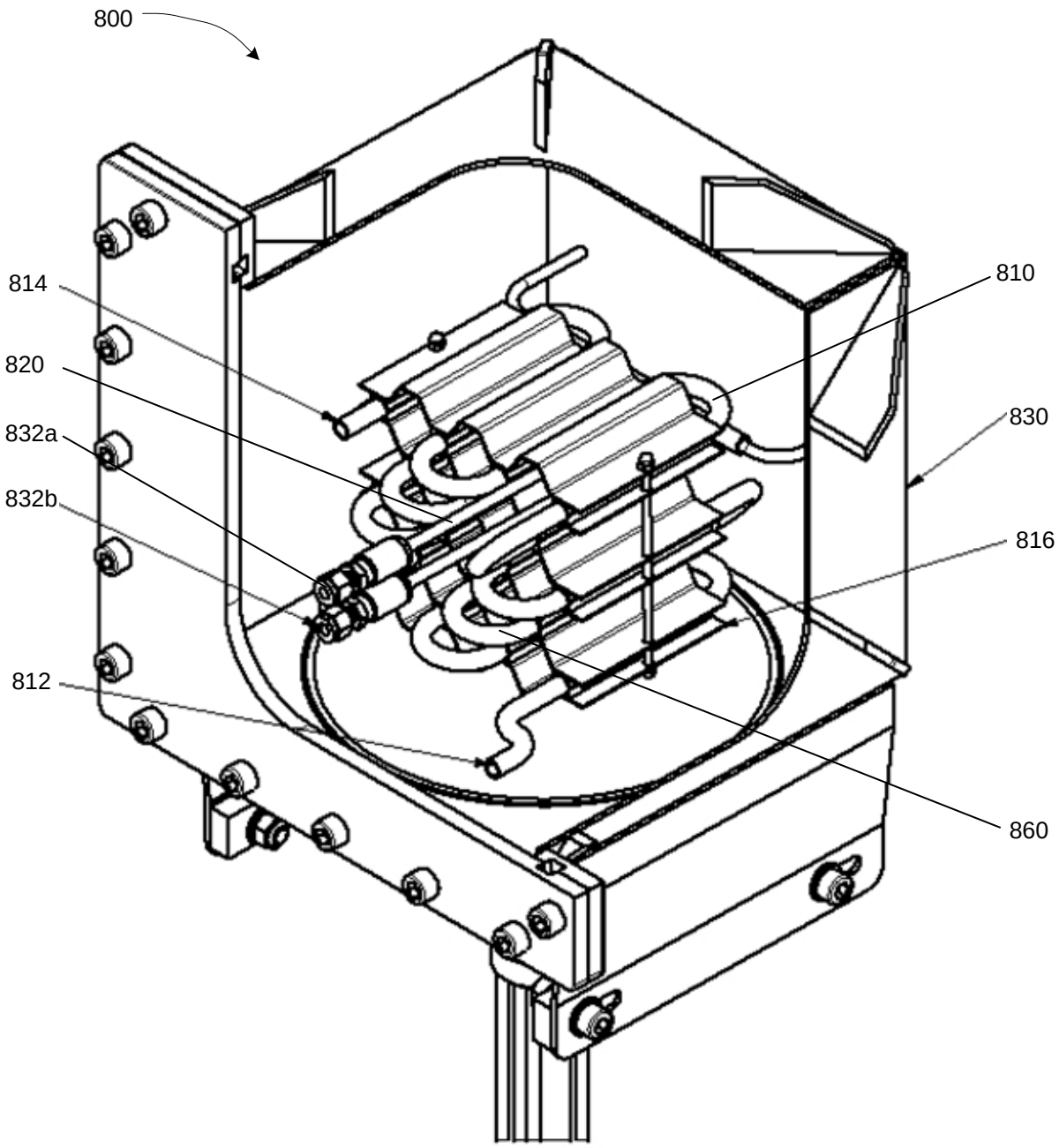

FIG 8