DRAWINGS

FIG. 1

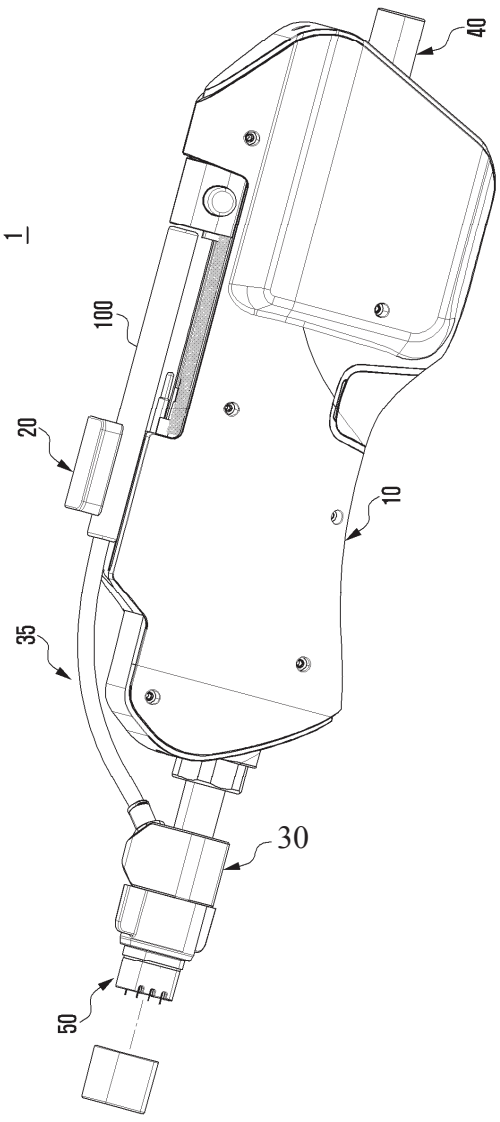

FIG. 2

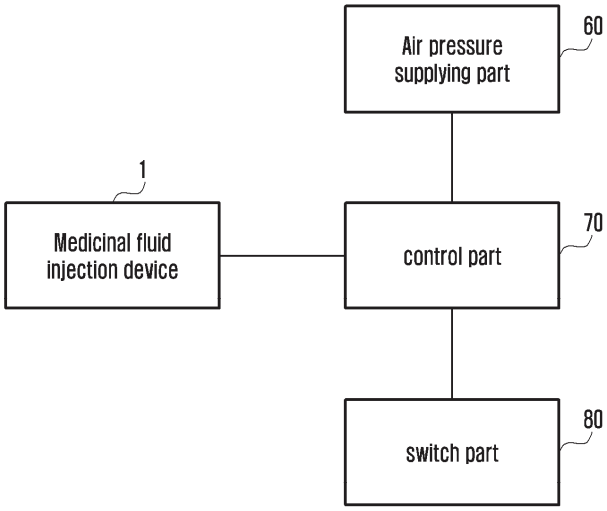
Air pressure supplying part
60
1
Medicinal fluid injection device
control part
70
switch part
80

FIG. 3

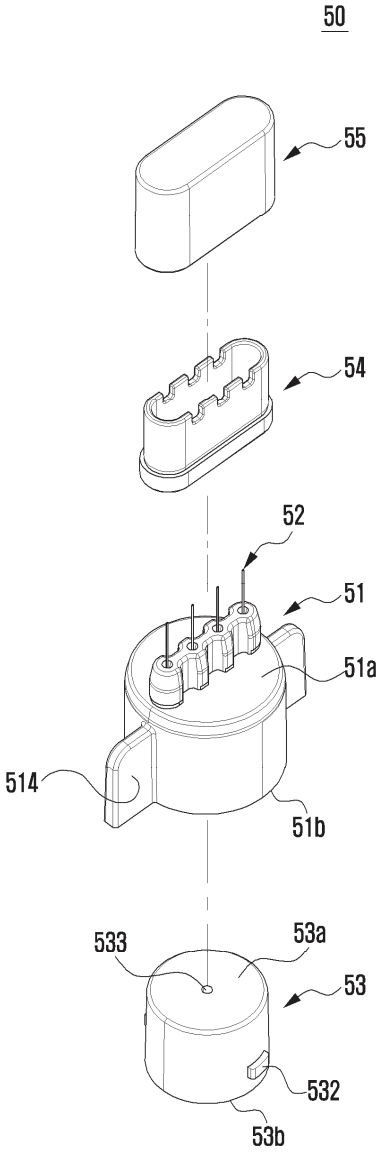

FIG. 4

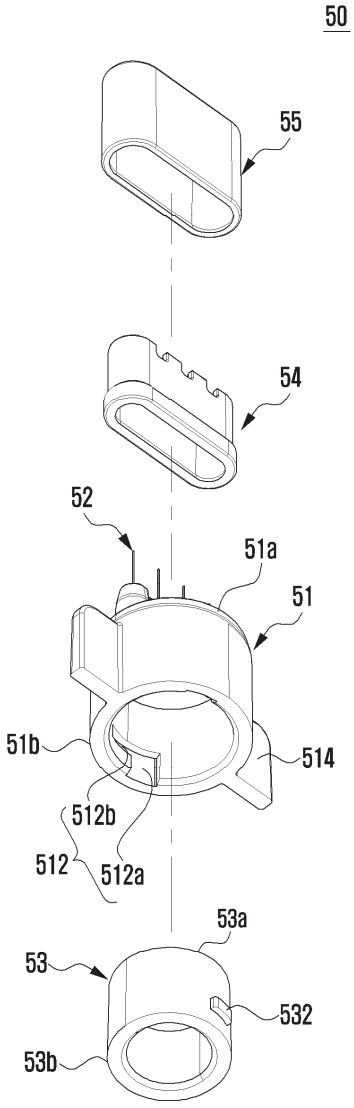

FIG. 5

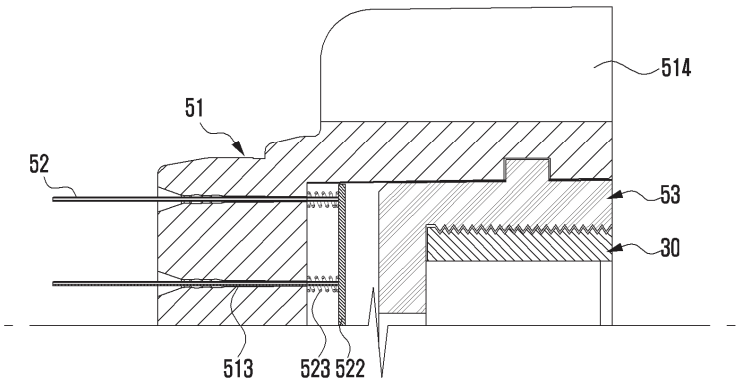

FIG. 6

