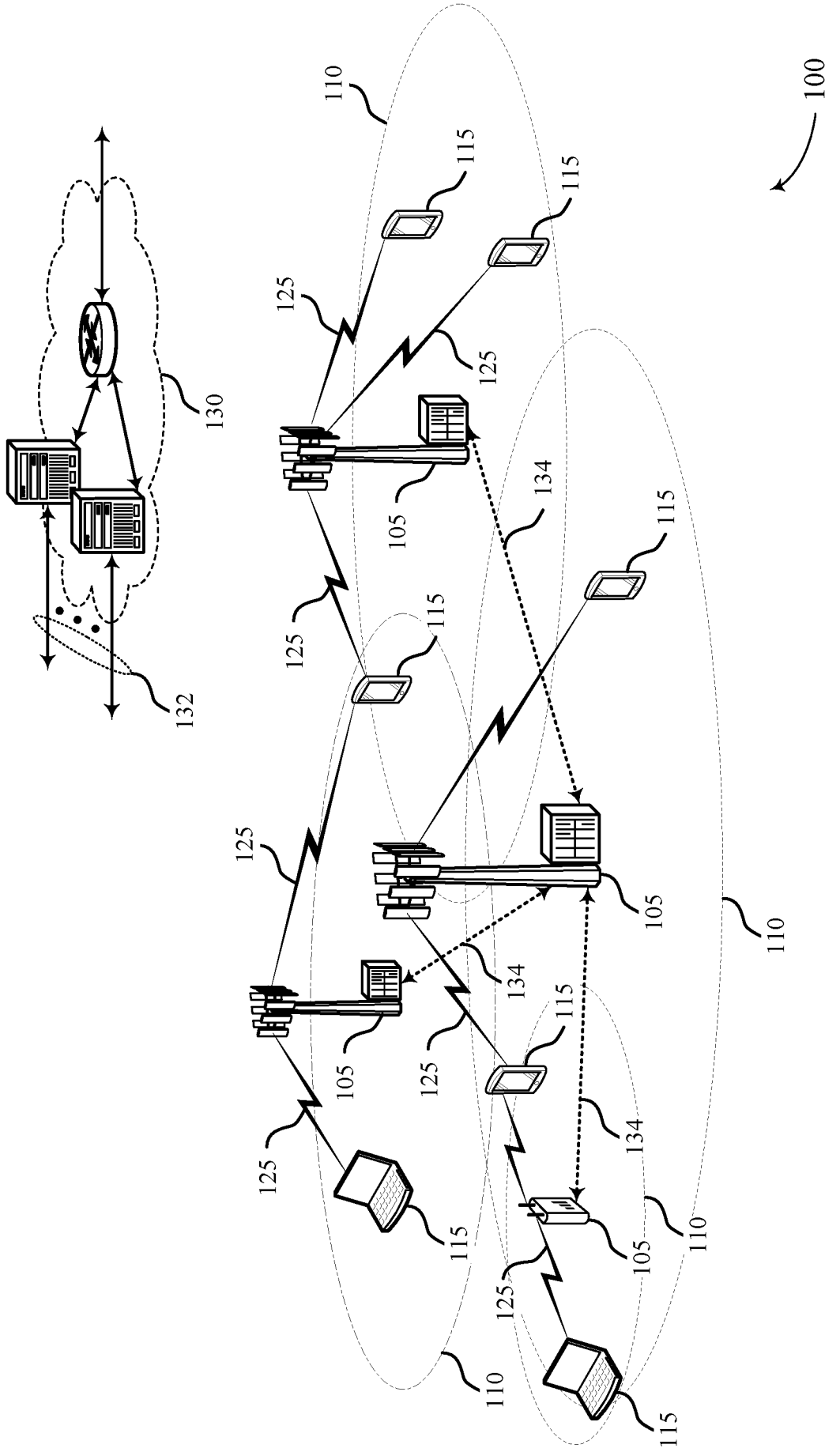

FIG. 1

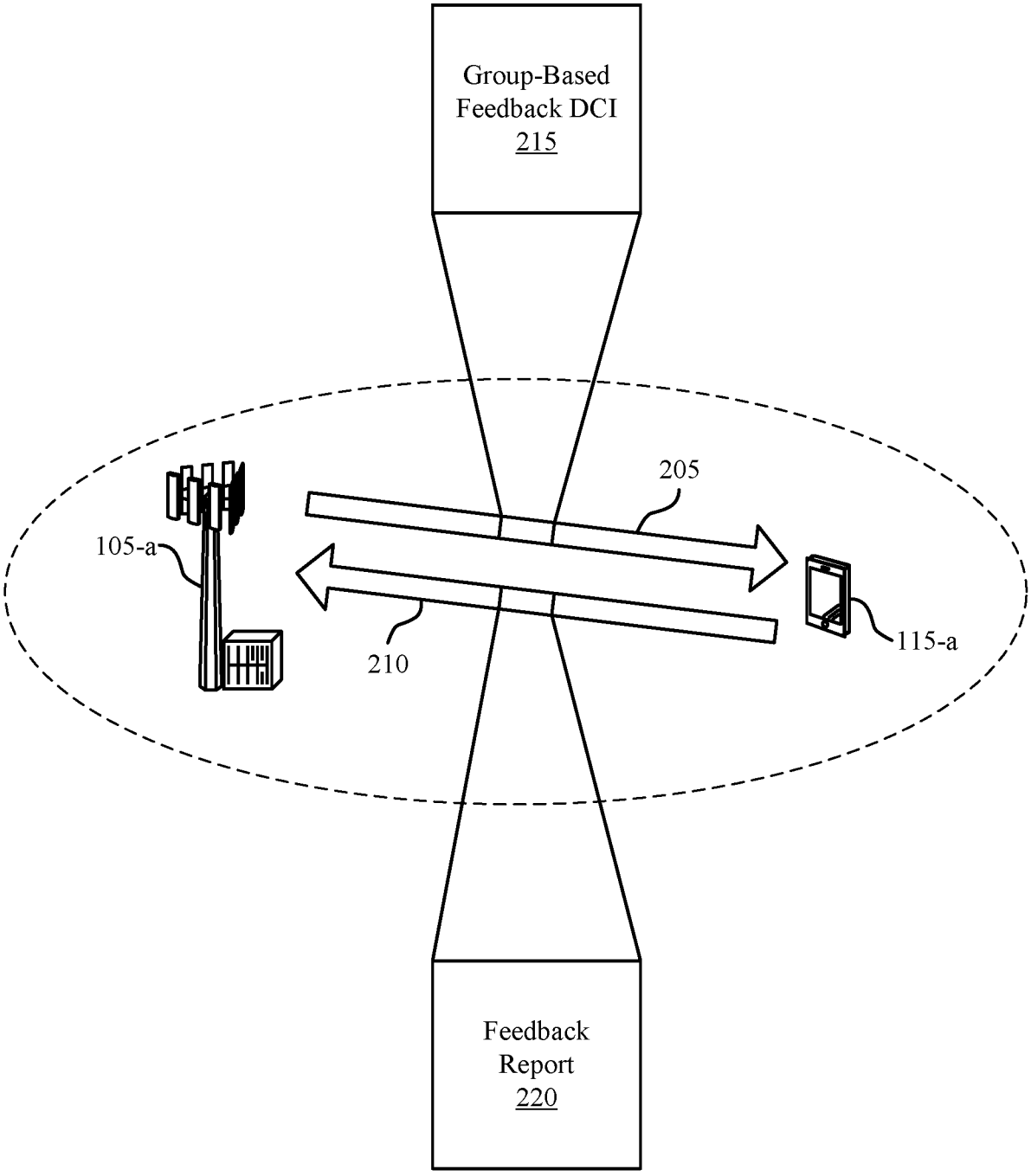
Group-Based
Feedback DCI
215
205
105-a
210
115-a
Feedback
Report
220
200

FIG. 2

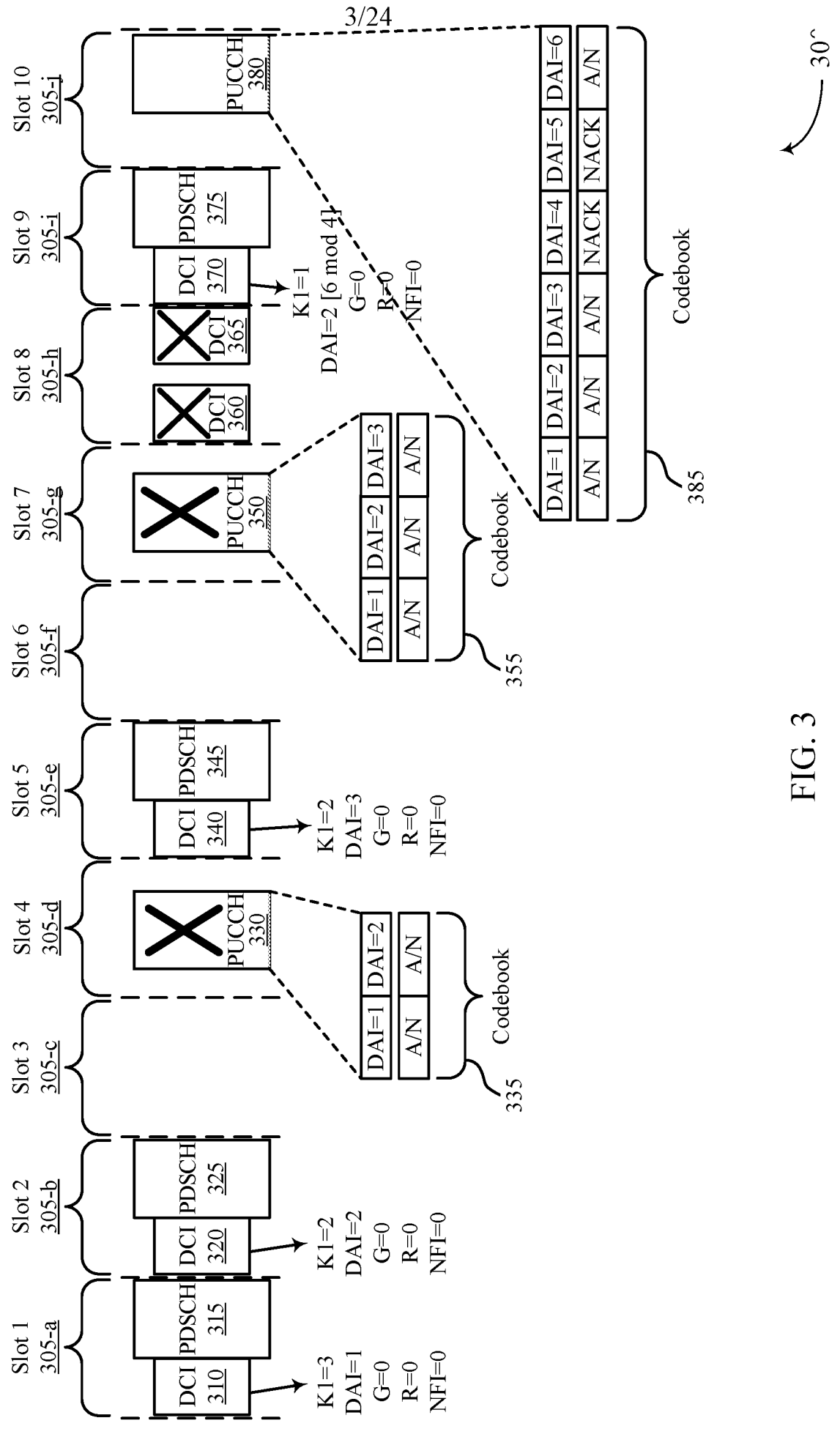
Slot 1 305-a
Slot 2 305-b
Slot 3 305-c
Slot 4 305-d
Slot 5 305-e
Slot 6 305-f
Slot 7 305-g
Slot 8 305-h
Slot 9 305-i
Slot 10 305-j
DCI 310
PDSCH 315
DCI 320
PDSCH 325
PUCCH 330
DCI 340
PDSCH 345
PUCCH 350
DCI 360
DCI 365
DCI 370
PDSCH 375
PUCCH 380
K1=3
DAI=1
G=0
R=0
NFI=0
K1=2
DAI=2
G=0
R=0
NFI=0
K1=2
DAI=3
G=0
R=0
NFI=0
K1=1
DAI=2 [6 mod 4]
G=0
R=0
NFI=0
DAI=1
DAI=2
A/N
A/N
Codebook
335
DAI=1
DAI=2
DAI=3
A/N
A/N
Codebook
355
DAI=1
DAI=2
DAI=3
DAI=4
DAI=5
DAI=6
A/N
A/N
A/N
NACK
NACK
A/N
Codebook
385
300

FIG. 3

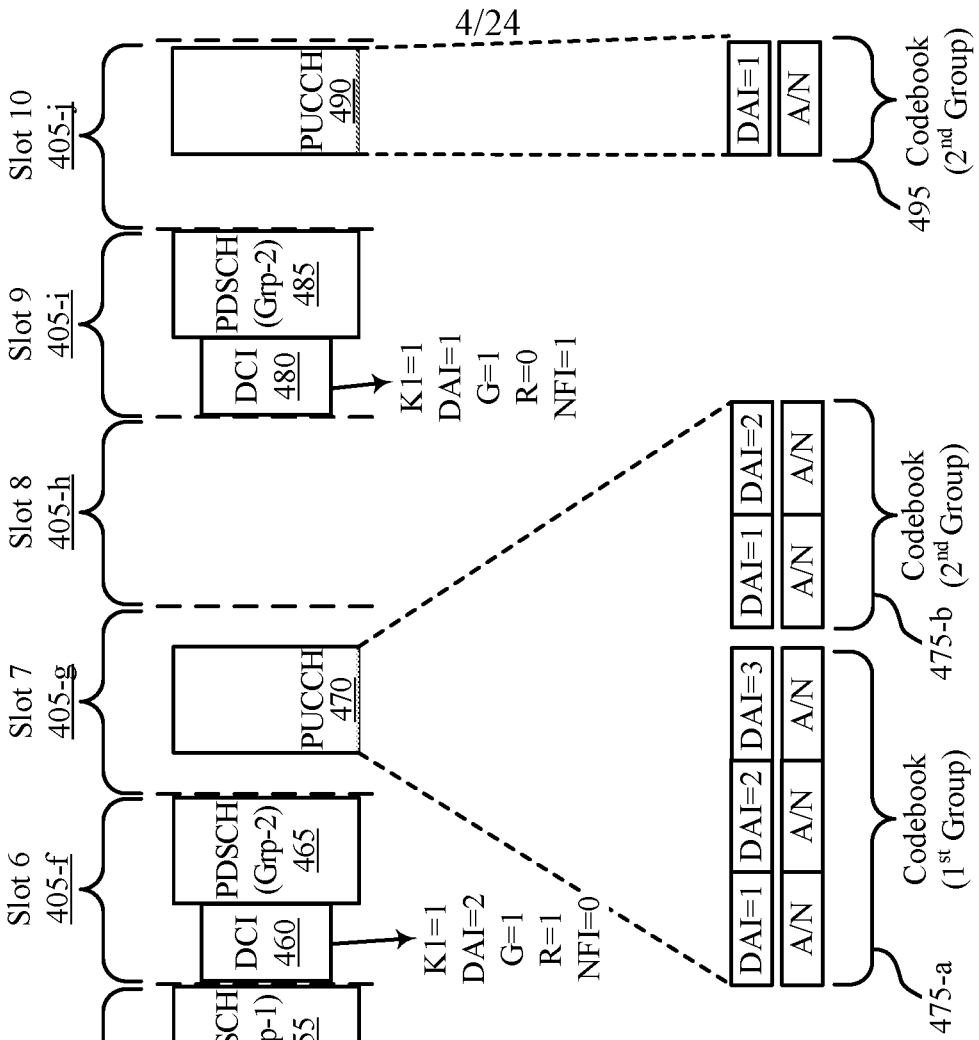
Slot 1 405-a
Slot 2 405-b
Slot 3 405-c
Slot 4 405-d
Slot 5 405-e
Slot 6 405-f
Slot 7 405-g
Slot 8 405-h
Slot 9 405-i
Slot 10 405-j
DCI 410
PDSCH (Grp-1) 415
DCI 420
PDSCH (Grp-1) 425
DCI 430
PDSCH (Grp-2) 435
PUCCH 440
DCI 450
PDSCH (Grp-1) 455
DCI 460
PDSCH (Grp-2) 465
PUCCH 470
DCI 480
PDSCH (Grp-2) 485
PUCCH 490
K1=3 DAI=1 G=0 R=0 NFI=0
K1=2 DAI=2 G=0 R=0 NFI=0
K1=4 DAI=1 G=1 R=0 NFI=0
K1=2 DAI=3 G=0 R=1 NFI=0
K1=1 DAI=2 G=1 R=1 NFI=0
K1=1 DAI=1 G=1 R=0 NFI=1
DAI=1 DAI=2 A/N A/N
Codebook (1st Group) 445
DAI=1 DAI=2 DAI=3 A/N A/N A/N
Codebook (1st Group) 475-a
DAI=1 DAI=2 A/N A/N
Codebook (2nd Group) 475-b
DAI=1 A/N
Codebook (2nd Group) 495
40

FIG. 4

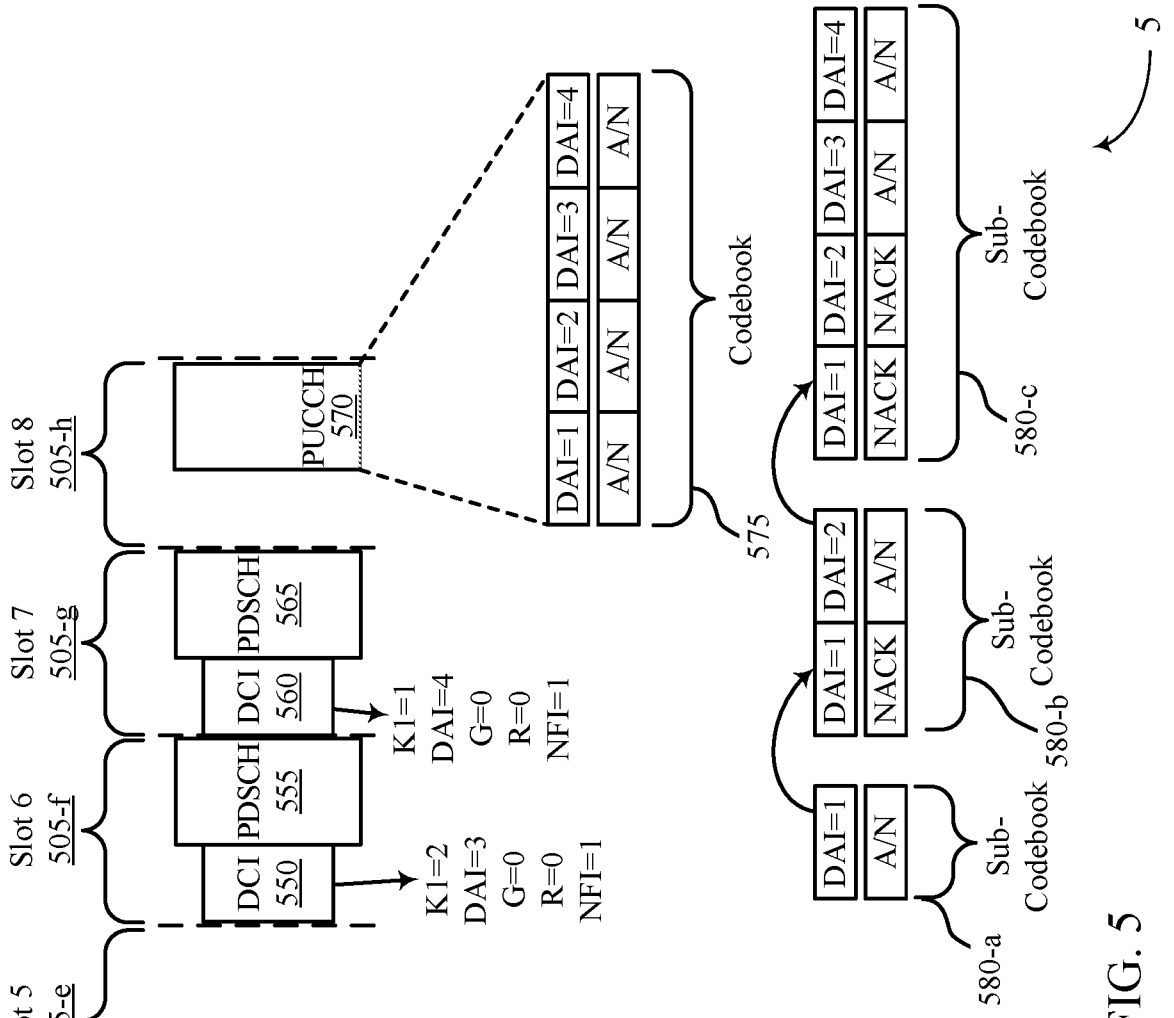
Slot 1 505-a
Slot 2 505-b
Slot 3 505-c
Slot 4 505-d
Slot 5 505-e
Slot 6 505-f
Slot 7 505-g
Slot 8 505-h
DCI 510
PDSCH 515
PUCCH 520
DCI 530
PDSCH 535
DCI 540
PDSCH 545
DCI 550
PDSCH 555
DCI 560
PDSCH 565
PUCCH 570
K1=1
DAI=1
G=0
R=0
NFI=0
K1=5
DAI=1
G=0
R=0
NFI=1
K1=4
DAI=2
G=0
R=0
NFI=0
K1=2
DAI=3
G=0
R=0
NFI=1
K1=1
DAI=4
G=0
R=0
NFI=1
DAI=1
A/N
525 Codebook
DAI=1
DAI=2
DAI=3
DAI=4
A/N
A/N
A/N
575 Codebook
DAI=1
A/N
580-a Sub-Codebook
DAI=1
DAI=2
NACK
A/N
580-b Sub-Codebook
DAI=1
DAI=2
DAI=3
DAI=4
NACK
NACK
A/N
A/N
580-c Sub-Codebook
5

FIG. 5

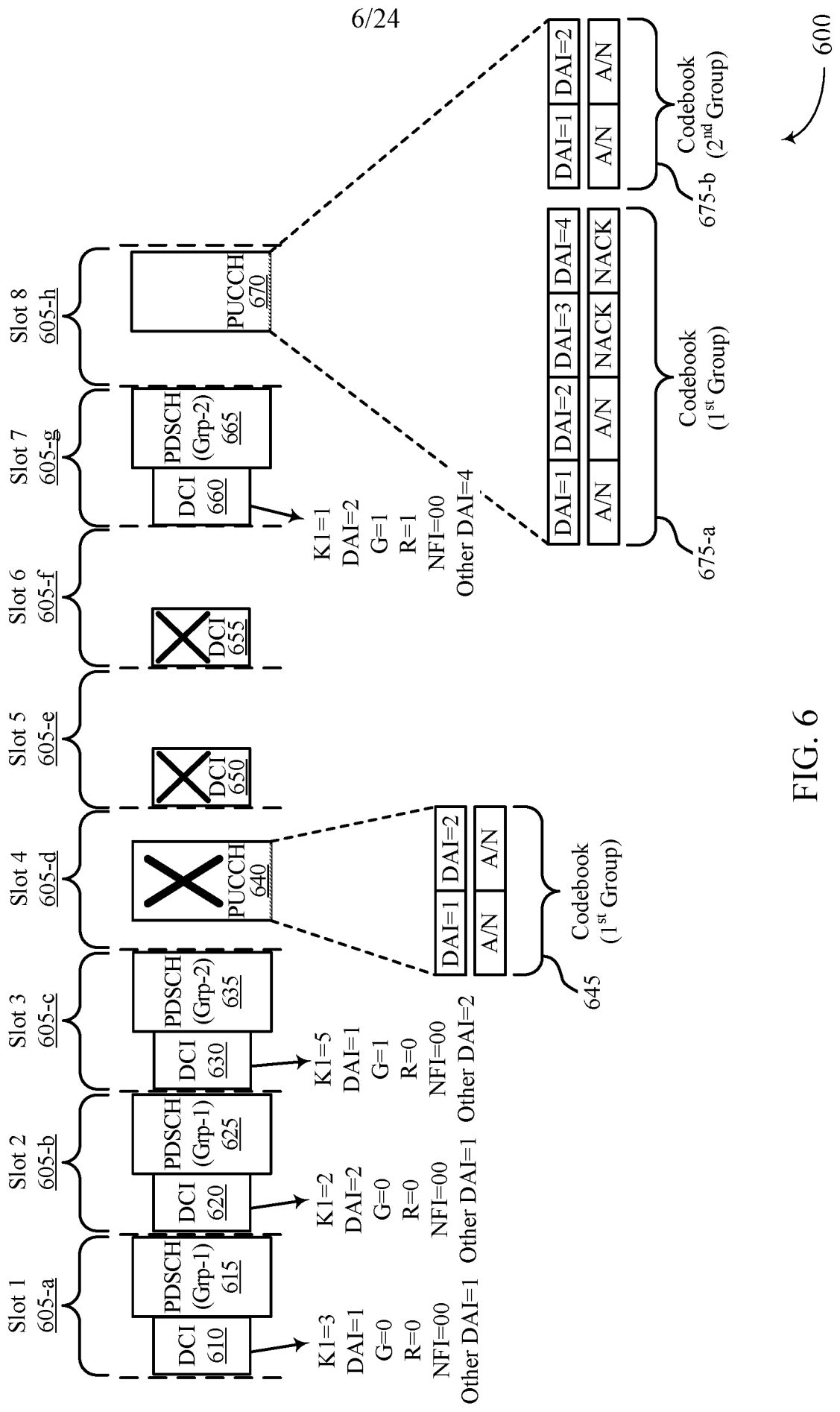
600
Slot 1 605-a
Slot 2 605-b
Slot 3 605-c
Slot 4 605-d
Slot 5 605-e
Slot 6 605-f
Slot 7 605-g
Slot 8 605-h
DCI 610
PDSCH (Grp-1) 615
DCI 620
PDSCH (Grp-1) 625
DCI 630
PDSCH (Grp-2) 635
PUCCH 640
DCI 650
DCI 655
DCI 660
PDSCH (Grp-2) 665
PUCCH 670
K1=3
DAI=1
G=0
R=0
NFI=00
Other DAI=1
K1=2
DAI=2
G=0
R=0
NFI=00
Other DAI=1
K1=5
DAI=1
G=1
R=0
NFI=00
Other DAI=2
K1=1
DAI=2
G=1
R=1
NFI=00
Other DAI=4
DAI=1 | DAI=2
A/N | A/N
645
Codebook (1st Group)
DAI=1 | DAI=2 | DAI=3 | DAI=4
A/N | A/N | NACK | NACK
675-a
Codebook (1st Group)
DAI=1 | DAI=2
A/N | A/N
675-b
Codebook (2nd Group)

FIG. 6

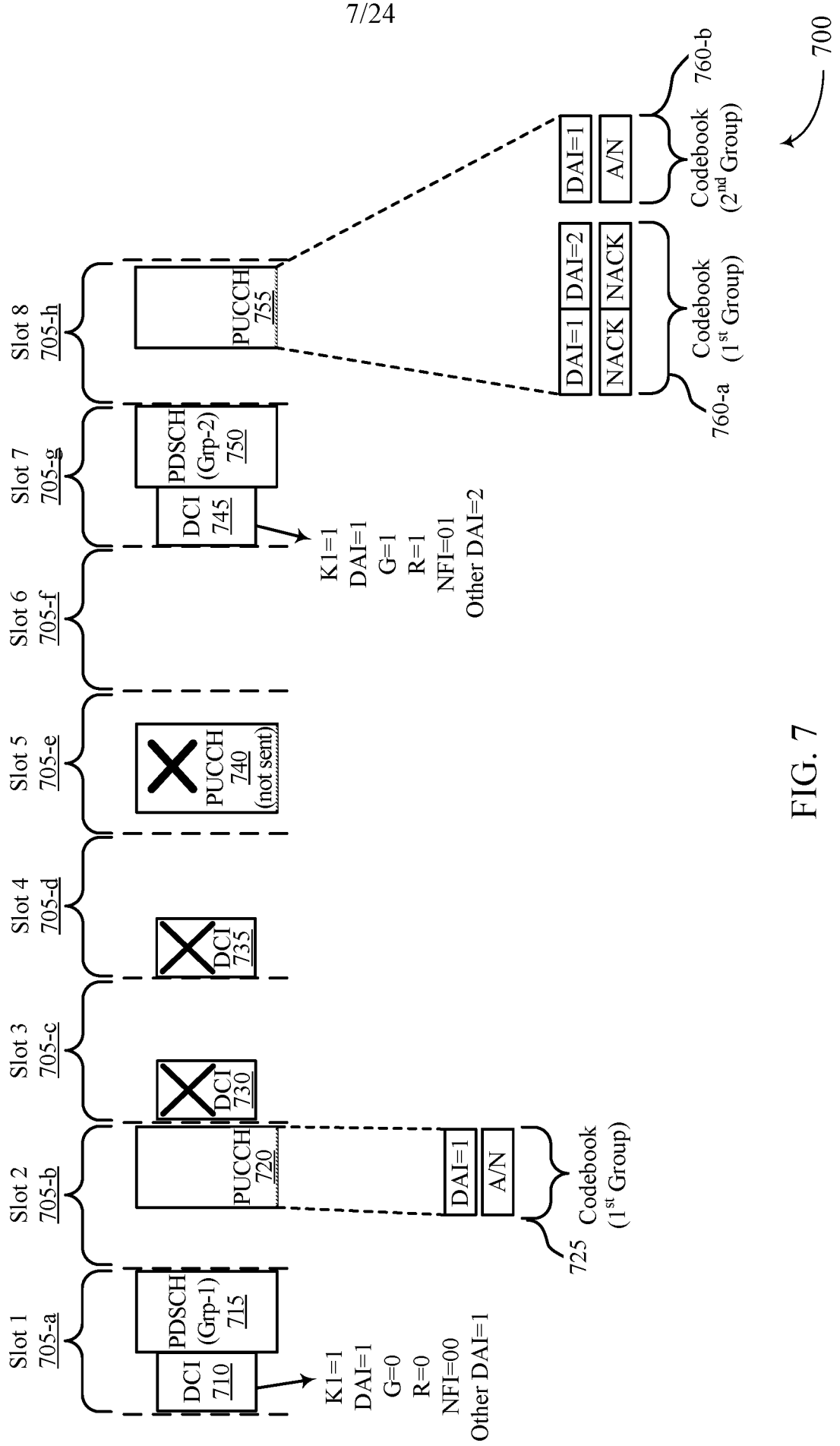
700
Slot 1 705-a
Slot 2 705-b
Slot 3 705-c
Slot 4 705-d
Slot 5 705-e
Slot 6 705-f
Slot 7 705-g
Slot 8 705-h
DCI 710
PDSCH (Grp-1) 715
K1=1
DAI=1
G=0
R=0
NFI=00
Other DAI=1
PUCCH 720
DCI 730
DCI 735
PUCCH 740 (not sent)
DCI 745
PDSCH (Grp-2) 750
K1=1
DAI=1
G=1
R=1
NFI=01
Other DAI=2
PUCCH 755
DAI=1
A/N
725 Codebook (1st Group)
DAI=1
DAI=2
NACK
NACK
760-a Codebook (1st Group)
DAI=1
A/N
760-b Codebook (2nd Group)

FIG. 7

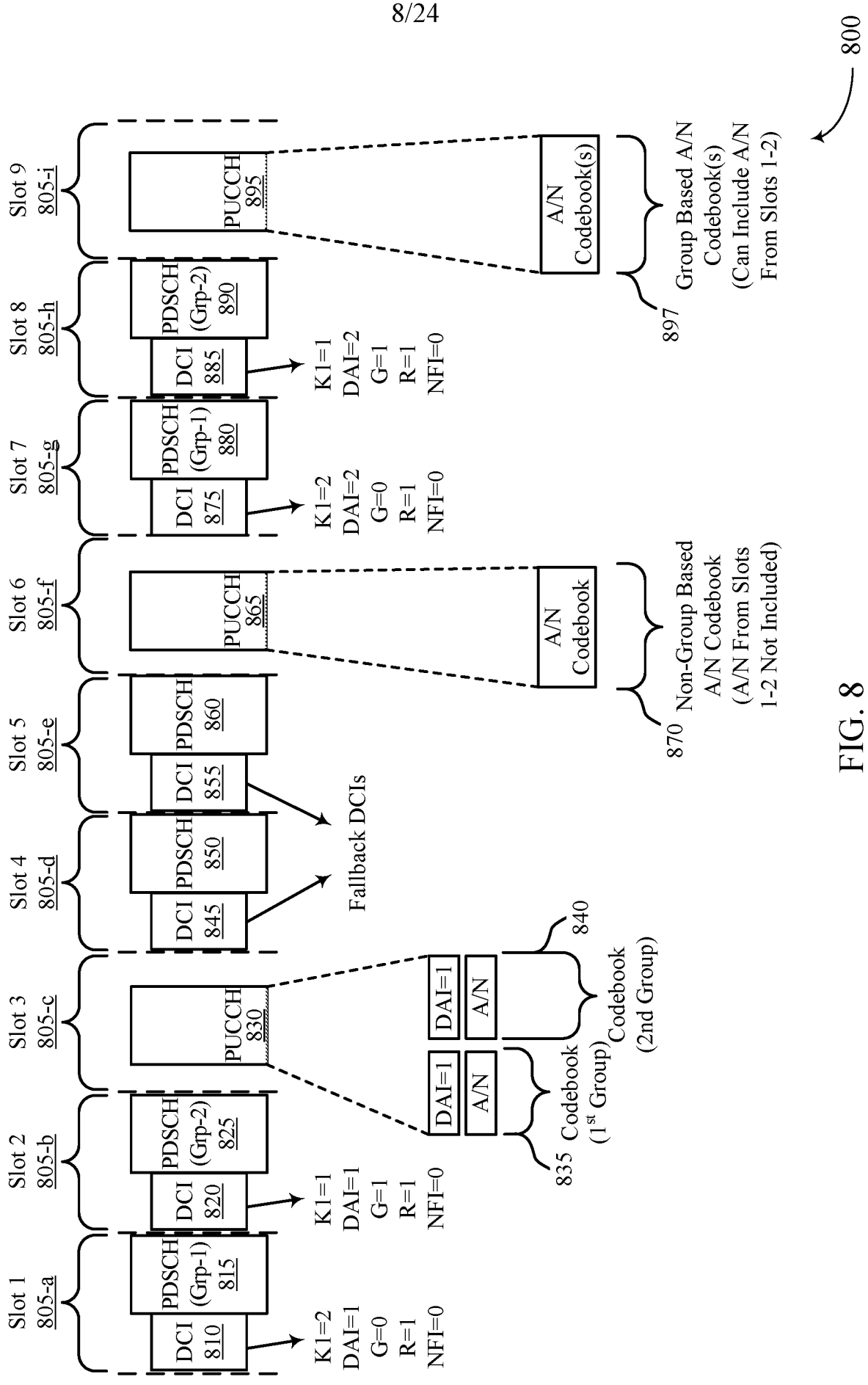
800
Slot 1 805-a
Slot 2 805-b
Slot 3 805-c
Slot 4 805-d
Slot 5 805-e
Slot 6 805-f
Slot 7 805-g
Slot 8 805-h
Slot 9 805-i
DCI 810
PDSCH (Grp-1) 815
DCI 820
PDSCH (Grp-2) 825
PUCCH 830
DCI 845
PDSCH 850
DCI 855
PDSCH 860
PUCCH 865
DCI 875
PDSCH (Grp-1) 880
DCI 885
PDSCH (Grp-2) 890
PUCCH 895
K1=2 DAI=1 G=0 R=1 NFI=0
K1=1 DAI=1 G=1 R=1 NFI=0
K1=2 DAI=2 G=0 R=1 NFI=0
K1=1 DAI=2 G=1 R=1 NFI=0
Fallback DCIs
DAI=1
A/N
835 Codebook (1st Group)
840 Codebook (2nd Group)
A/N Codebook
870 Non-Group Based A/N Codebook (A/N From Slots 1-2 Not Included)
A/N Codebook(s)
897 Group Based A/N Codebook(s) (Can Include A/N From Slots 1-2)

FIG. 8

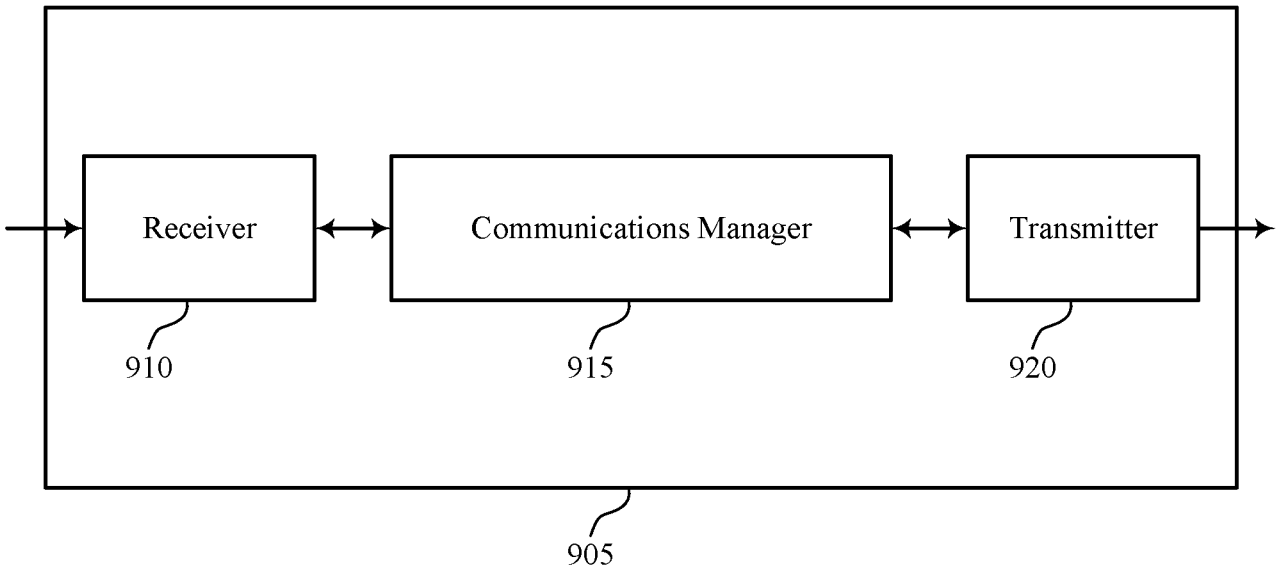
Receiver
Communications Manager
Transmitter
910
915
920
905
900

FIG. 9

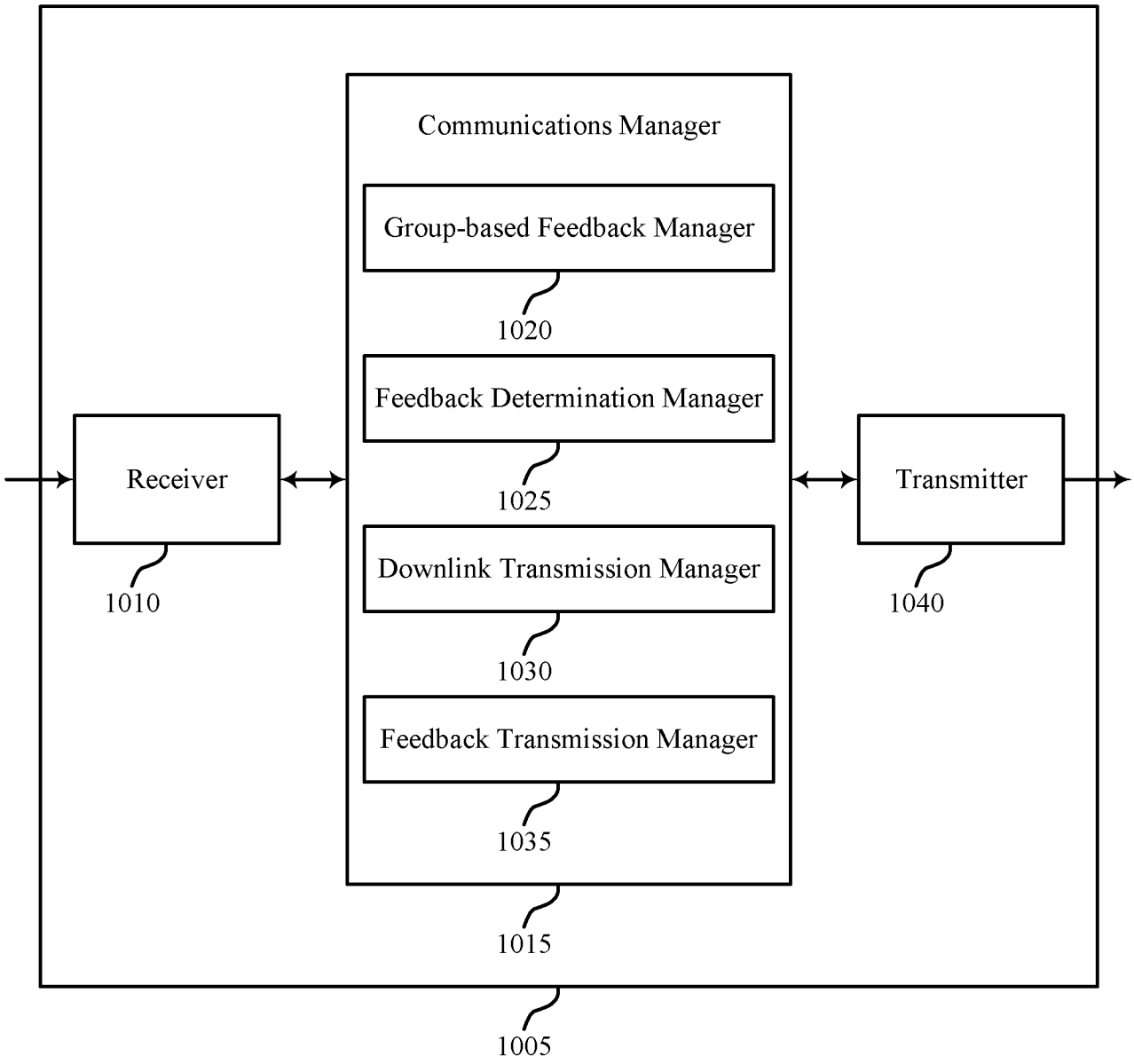
Communications Manager
Group-based Feedback Manager
1020
Feedback Determination Manager
1025
Receiver
Transmitter
1010
1040
Downlink Transmission Manager
1030
Feedback Transmission Manager
1035
1015
1005
1000

FIG. 10

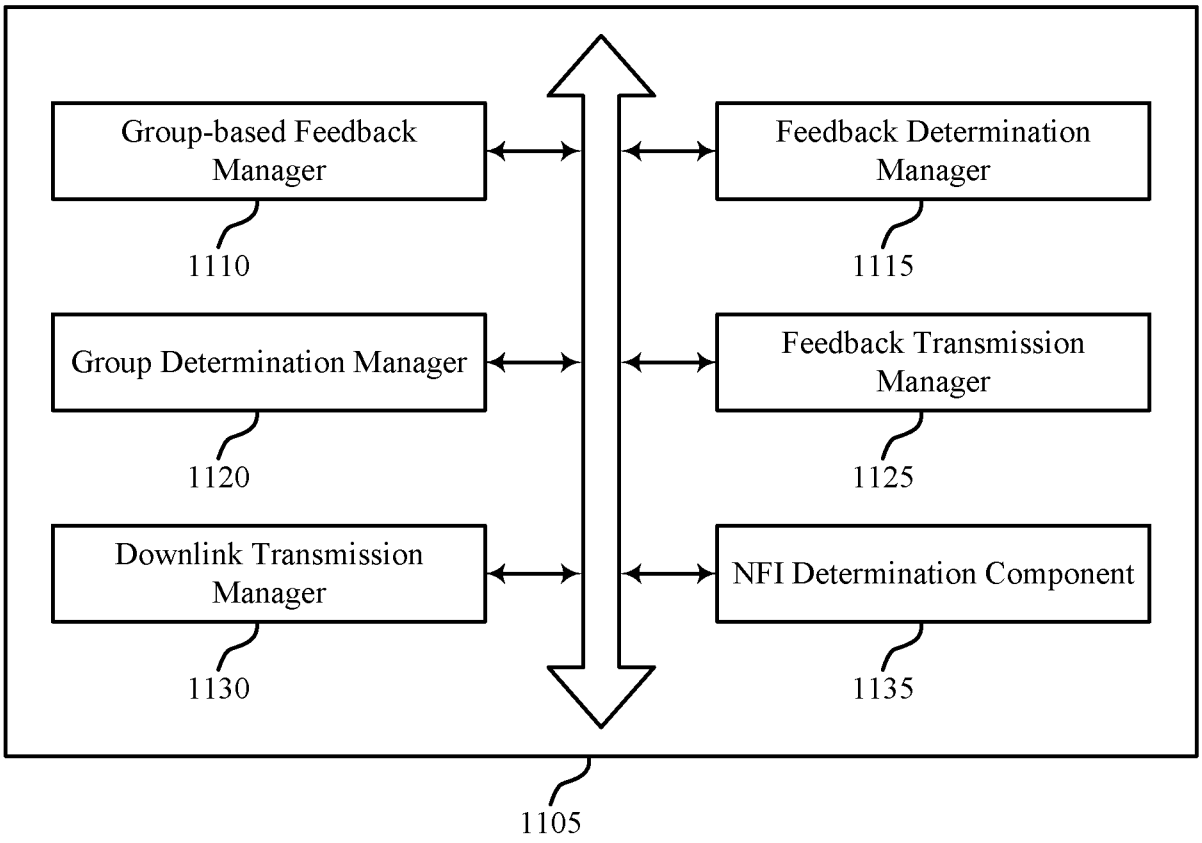
Group-based Feedback Manager
1110
Feedback Determination Manager
1115
Group Determination Manager
1120
Feedback Transmission Manager
1125
Downlink Transmission Manager
1130
NFI Determination Component
1135
1105
1100

FIG. 11

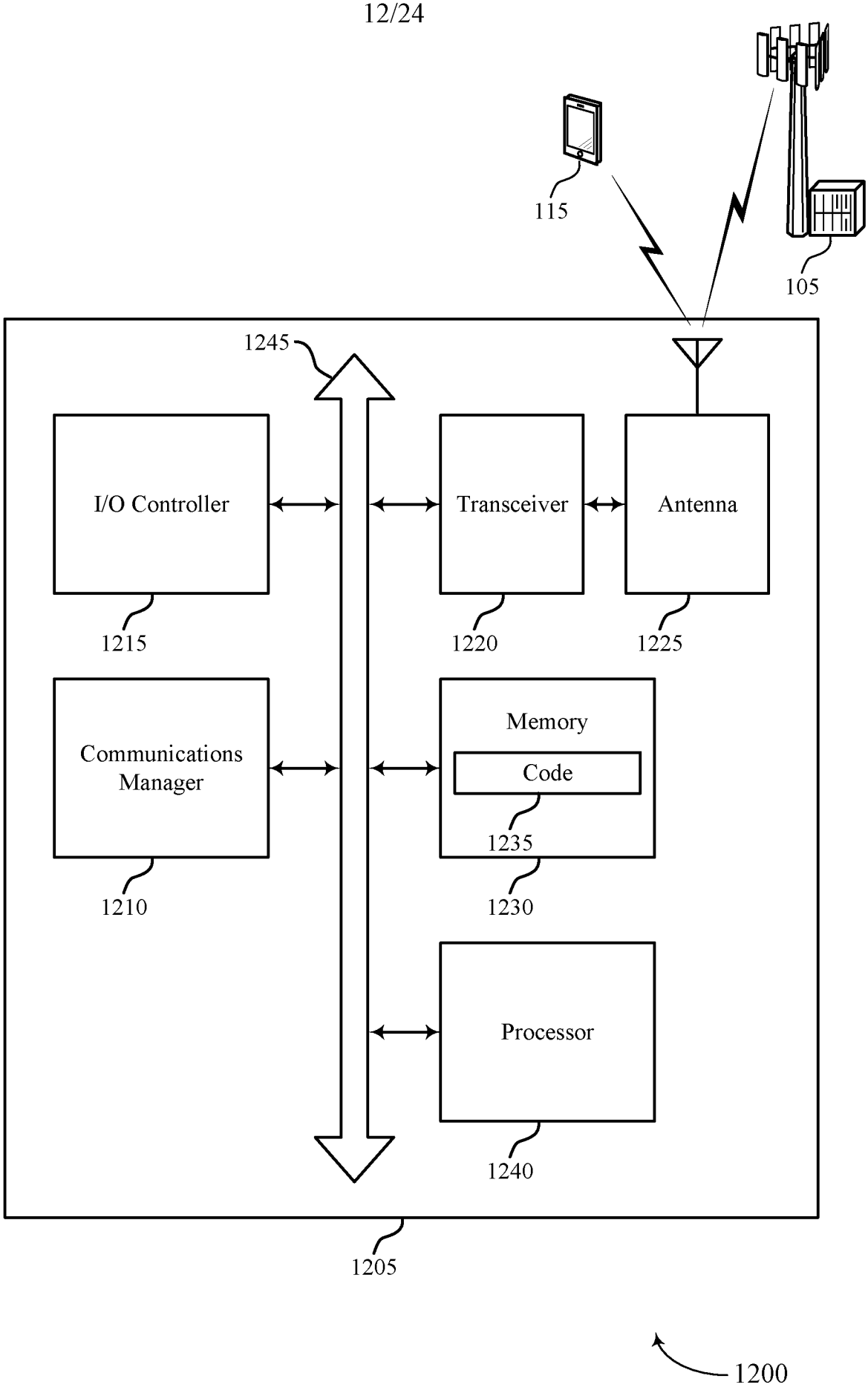
115
105
1245
I/O Controller
Transceiver
Antenna
1215
1220
1225
Communications Manager
Memory
Code
1235
1210
1230
Processor
1240
1205
1200

FIG. 12

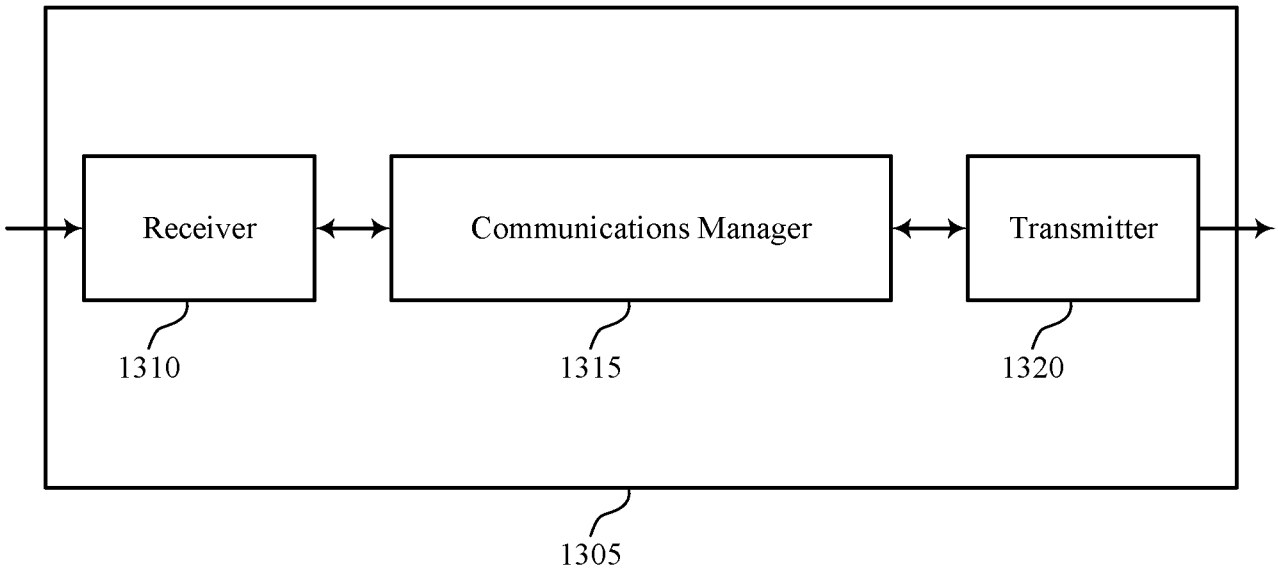
Receiver
Communications Manager
Transmitter
1310
1315
1320
1305
1300

FIG. 13

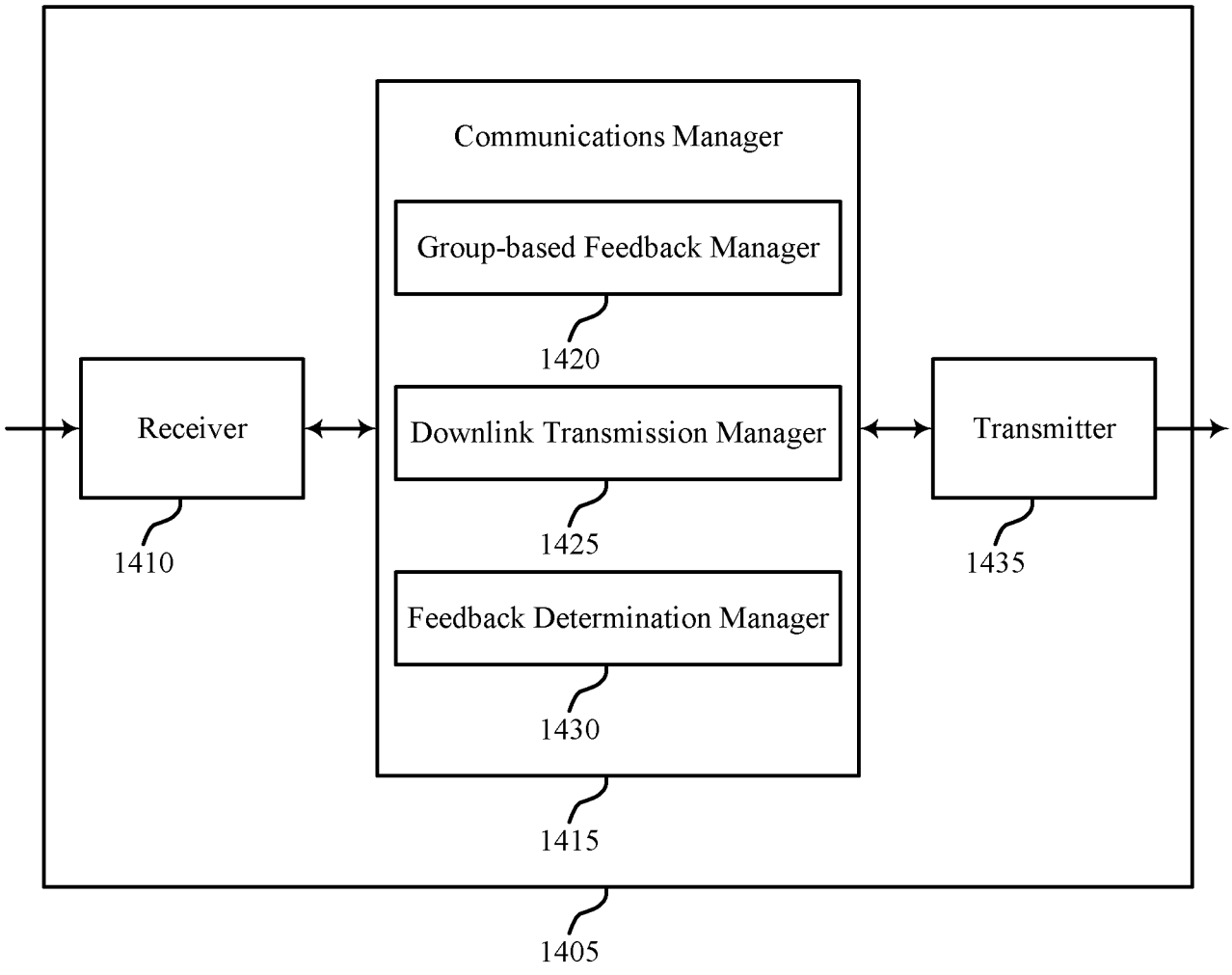
Communications Manager
Group-based Feedback Manager
1420
Receiver
Downlink Transmission Manager
Transmitter
1410
1425
1435
Feedback Determination Manager
1430
1415
1405
1400

FIG. 14

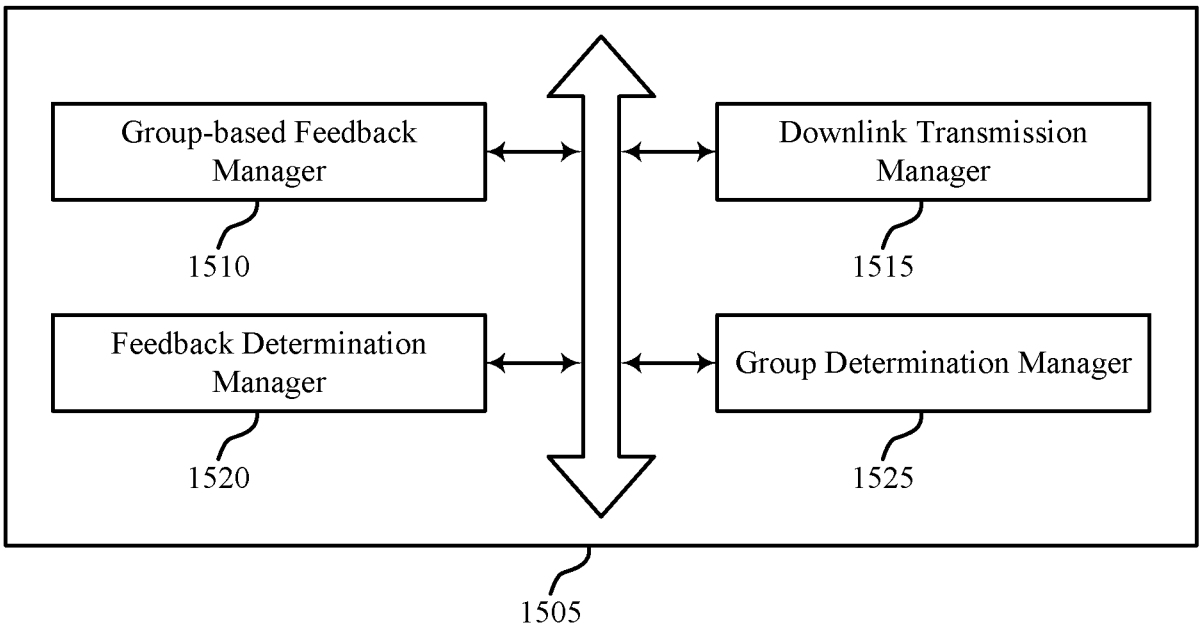
Group-based Feedback Manager
1510
Downlink Transmission Manager
1515
Feedback Determination Manager
1520
Group Determination Manager
1525
1505
1500

FIG. 15

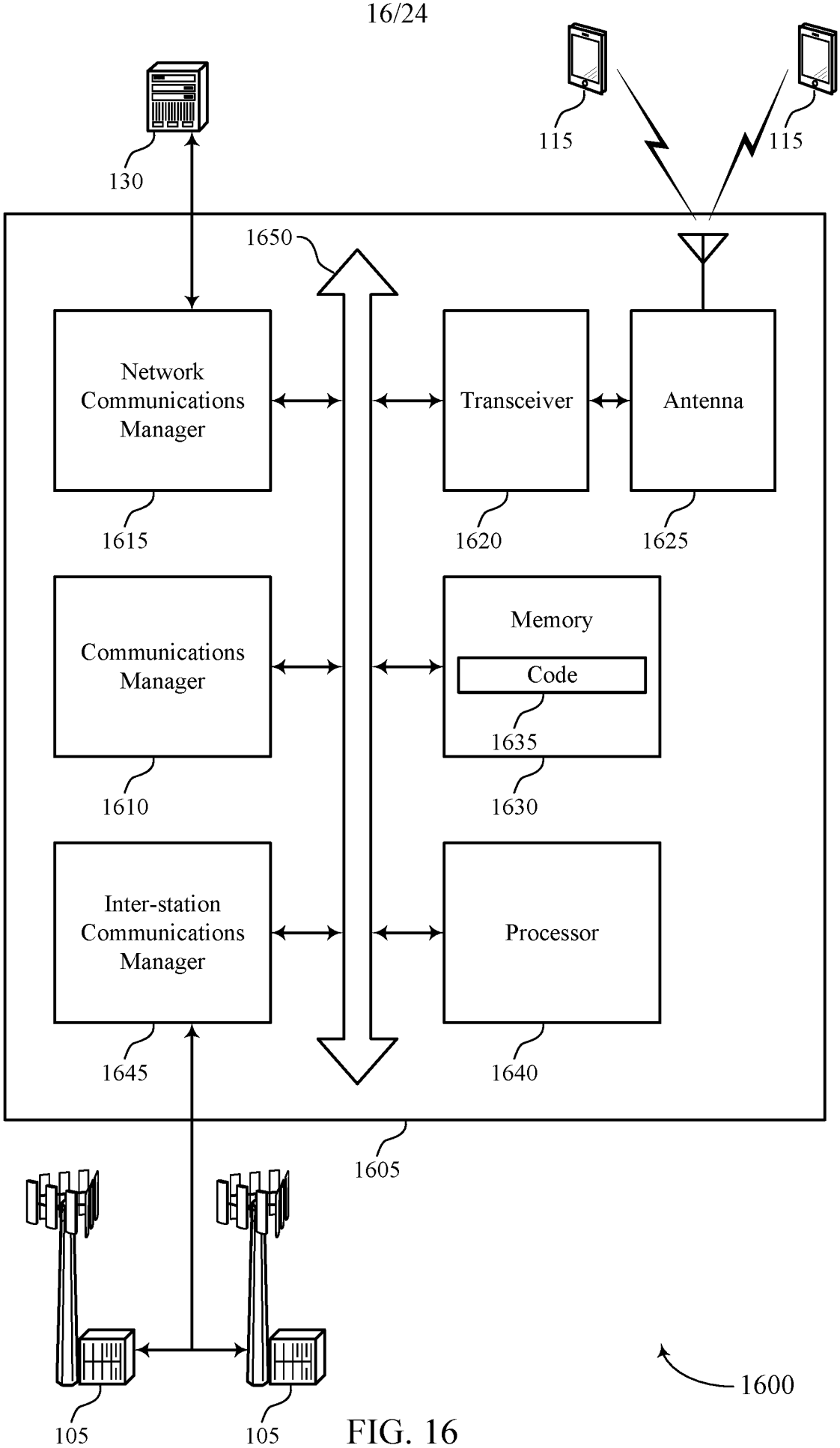
130
115
115
1650
Network Communications Manager
Transceiver
Antenna
1615
1620
1625
Communications Manager
Memory
Code
1635
1610
1630
Inter-station Communications Manager
Processor
1645
1640
1605
105
105
1600

FIG. 16

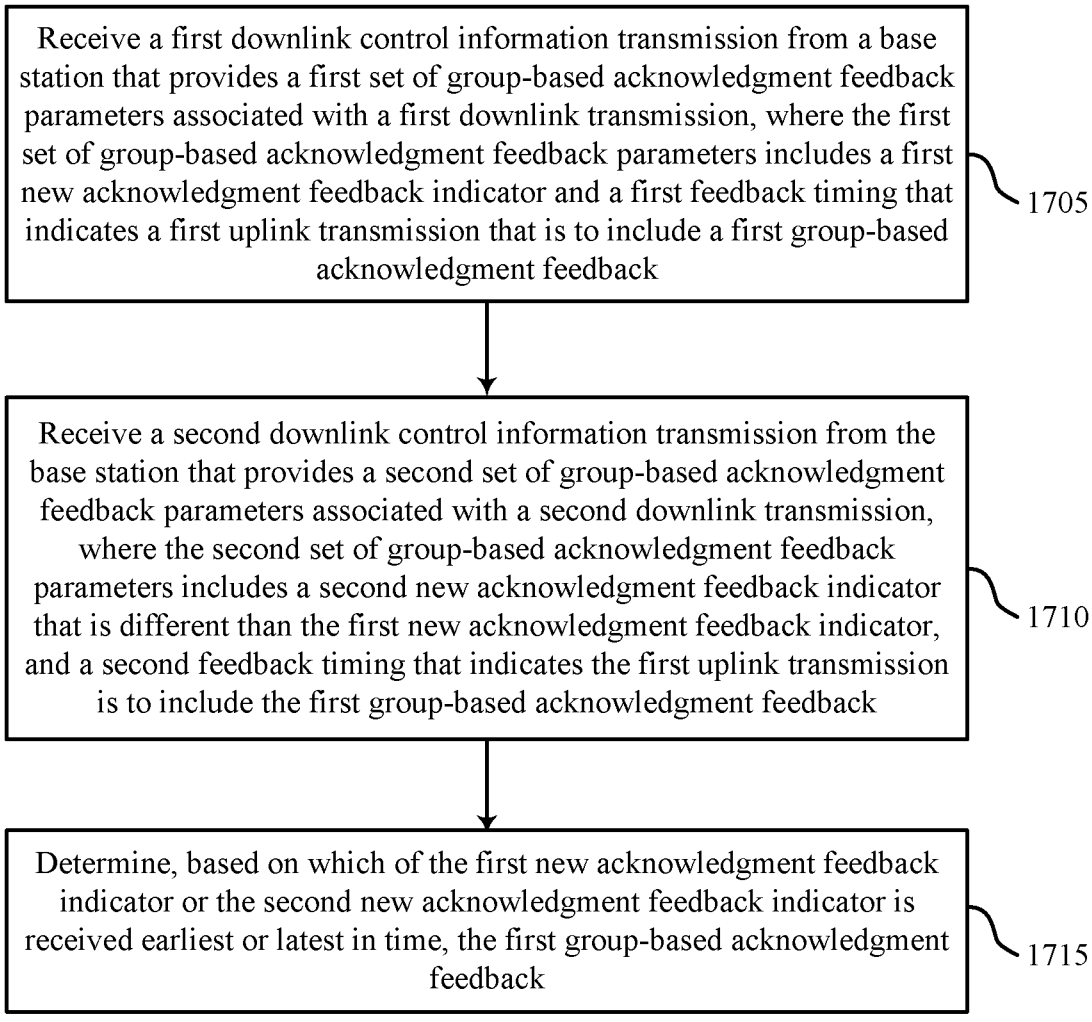
Receive a first downlink control information transmission from a base station that provides a first set of group-based acknowledgment feedback parameters associated with a first downlink transmission, where the first set of group-based acknowledgment feedback parameters includes a first new acknowledgment feedback indicator and a first feedback timing that indicates a first uplink transmission that is to include a first group-based acknowledgment feedback
1705
Receive a second downlink control information transmission from the base station that provides a second set of group-based acknowledgment feedback parameters associated with a second downlink transmission, where the second set of group-based acknowledgment feedback parameters includes a second new acknowledgment feedback indicator that is different than the first new acknowledgment feedback indicator, and a second feedback timing that indicates the first uplink transmission is to include the first group-based acknowledgment feedback
1710
Determine, based on which of the first new acknowledgment feedback indicator or the second new acknowledgment feedback indicator is received earliest or latest in time, the first group-based acknowledgment feedback
1715
1700

FIG. 17

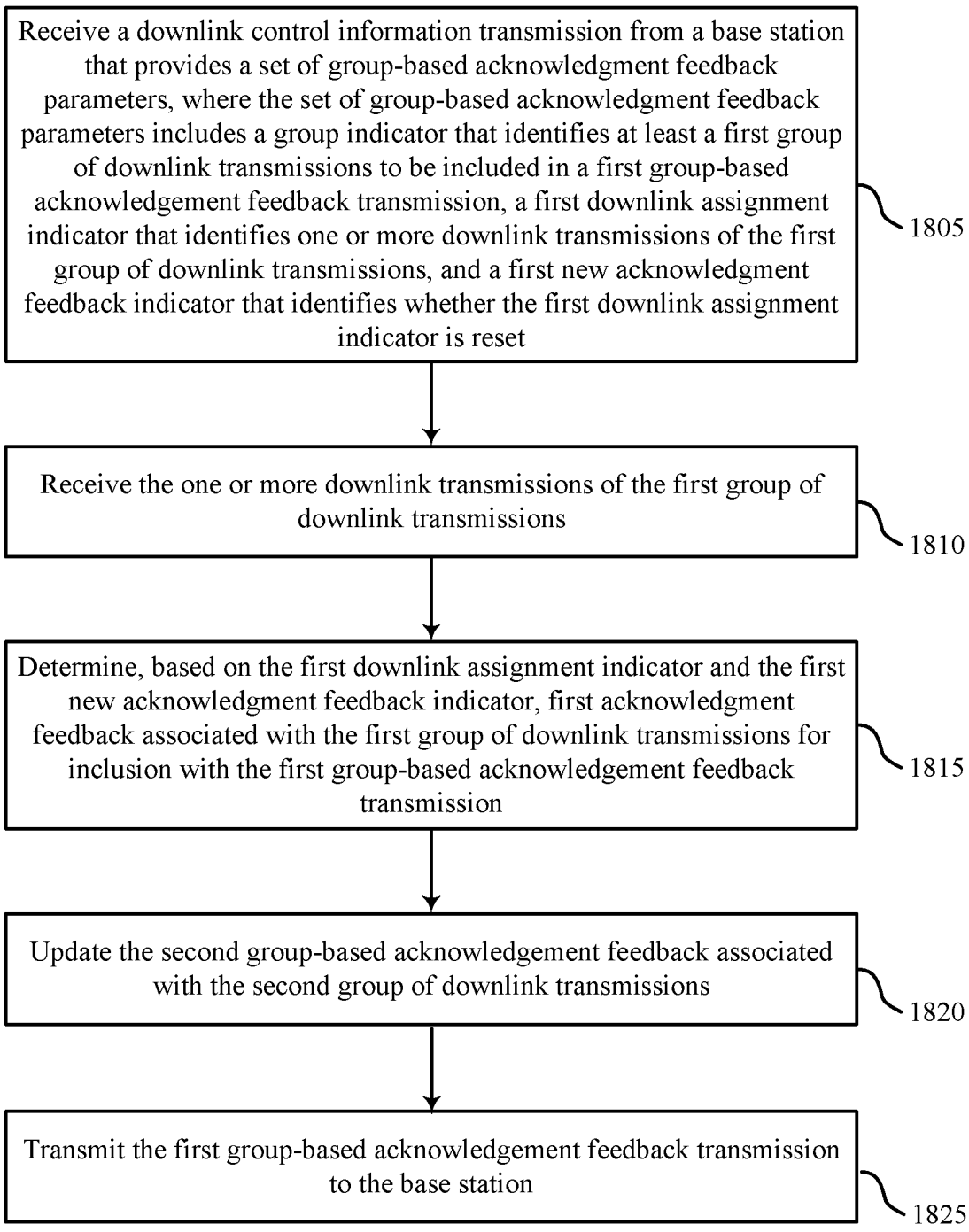
Receive a downlink control information transmission from a base station that provides a set of group-based acknowledgment feedback parameters, where the set of group-based acknowledgment feedback parameters includes a group indicator that identifies at least a first group of downlink transmissions to be included in a first group-based acknowledgement feedback transmission, a first downlink assignment indicator that identifies one or more downlink transmissions of the first group of downlink transmissions, and a first new acknowledgment feedback indicator that identifies whether the first downlink assignment indicator is reset
1805
Receive the one or more downlink transmissions of the first group of downlink transmissions
1810
Determine, based on the first downlink assignment indicator and the first new acknowledgment feedback indicator, first acknowledgment feedback associated with the first group of downlink transmissions for inclusion with the first group-based acknowledgement feedback transmission
1815
Update the second group-based acknowledgement feedback associated with the second group of downlink transmissions
1820
Transmit the first group-based acknowledgement feedback transmission to the base station
1825
1800

FIG. 18

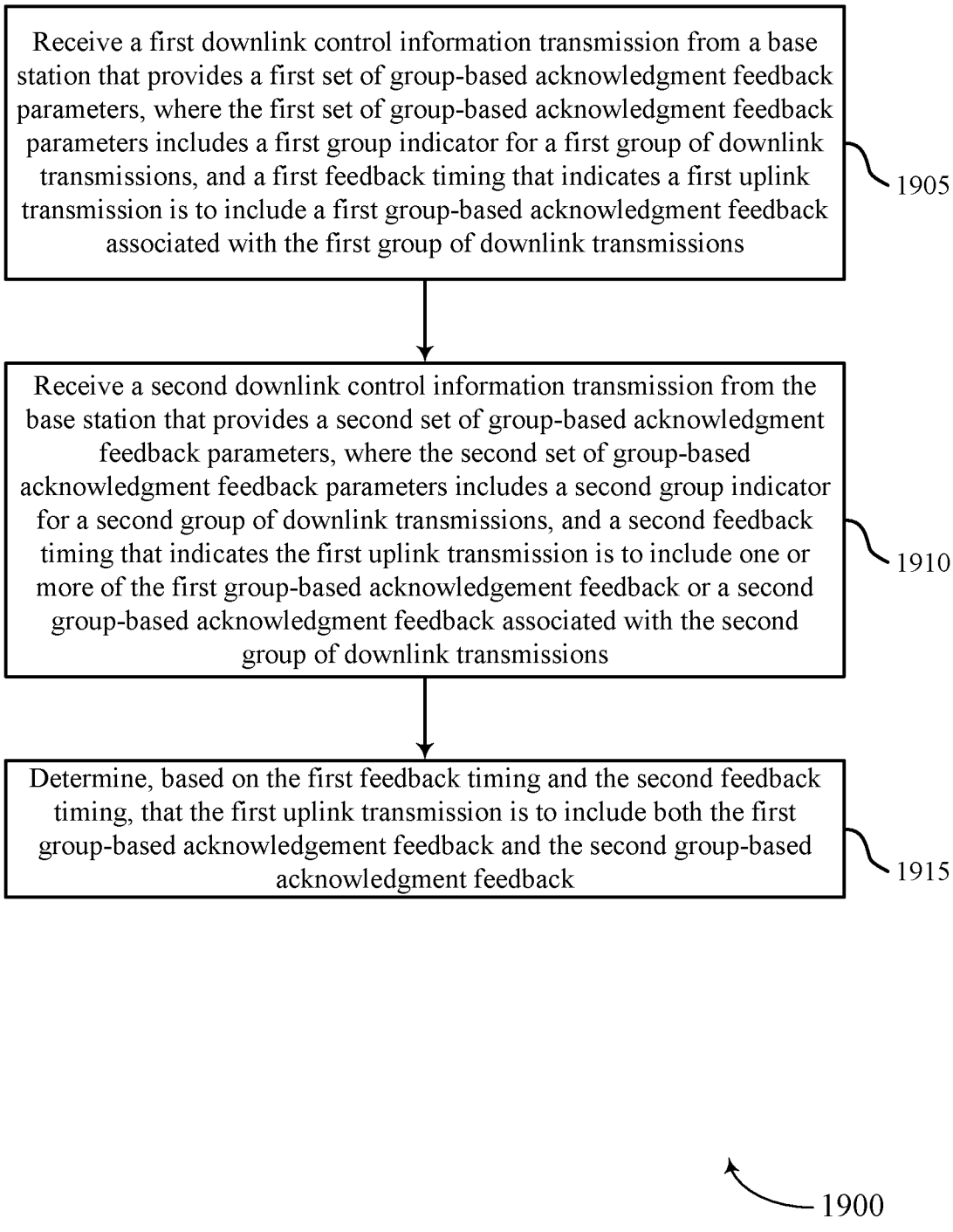
Receive a first downlink control information transmission from a base station that provides a first set of group-based acknowledgment feedback parameters, where the first set of group-based acknowledgment feedback parameters includes a first group indicator for a first group of downlink transmissions, and a first feedback timing that indicates a first uplink transmission is to include a first group-based acknowledgment feedback associated with the first group of downlink transmissions
1905
Receive a second downlink control information transmission from the base station that provides a second set of group-based acknowledgment feedback parameters, where the second set of group-based acknowledgment feedback parameters includes a second group indicator for a second group of downlink transmissions, and a second feedback timing that indicates the first uplink transmission is to include one or more of the first group-based acknowledgement feedback or a second group-based acknowledgment feedback associated with the second group of downlink transmissions
1910
Determine, based on the first feedback timing and the second feedback timing, that the first uplink transmission is to include both the first group-based acknowledgement feedback and the second group-based acknowledgment feedback
1915
1900

FIG. 19

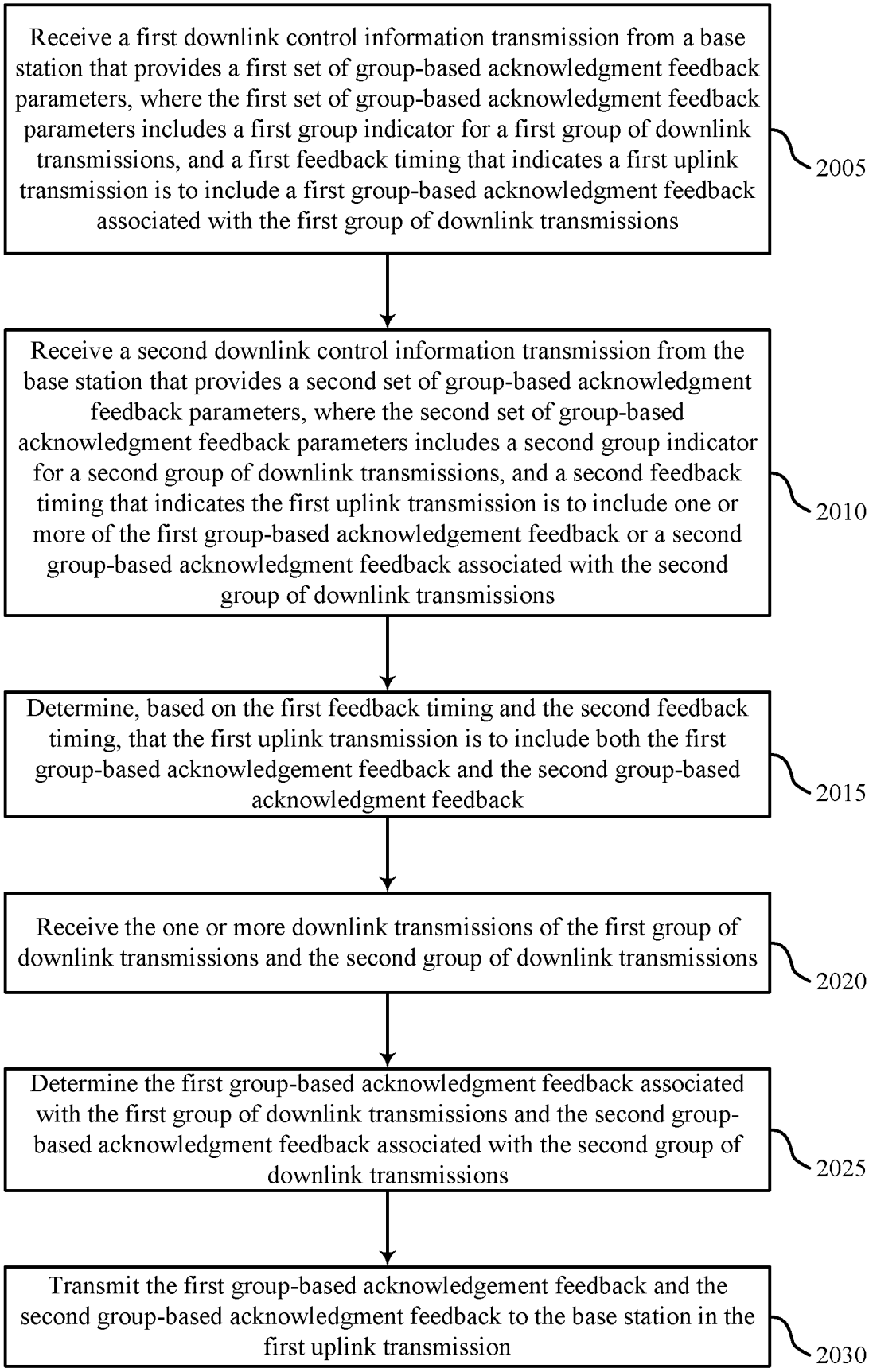
Receive a first downlink control information transmission from a base station that provides a first set of group-based acknowledgment feedback parameters, where the first set of group-based acknowledgment feedback parameters includes a first group indicator for a first group of downlink transmissions, and a first feedback timing that indicates a first uplink transmission is to include a first group-based acknowledgment feedback associated with the first group of downlink transmissions
2005
Receive a second downlink control information transmission from the base station that provides a second set of group-based acknowledgment feedback parameters, where the second set of group-based acknowledgment feedback parameters includes a second group indicator for a second group of downlink transmissions, and a second feedback timing that indicates the first uplink transmission is to include one or more of the first group-based acknowledgement feedback or a second group-based acknowledgment feedback associated with the second group of downlink transmissions
2010
Determine, based on the first feedback timing and the second feedback timing, that the first uplink transmission is to include both the first group-based acknowledgement feedback and the second group-based acknowledgment feedback
2015
Receive the one or more downlink transmissions of the first group of downlink transmissions and the second group of downlink transmissions
2020
Determine the first group-based acknowledgment feedback associated with the first group of downlink transmissions and the second group-based acknowledgment feedback associated with the second group of downlink transmissions
2025
Transmit the first group-based acknowledgement feedback and the second group-based acknowledgment feedback to the base station in the first uplink transmission
2030

FIG. 20

2000

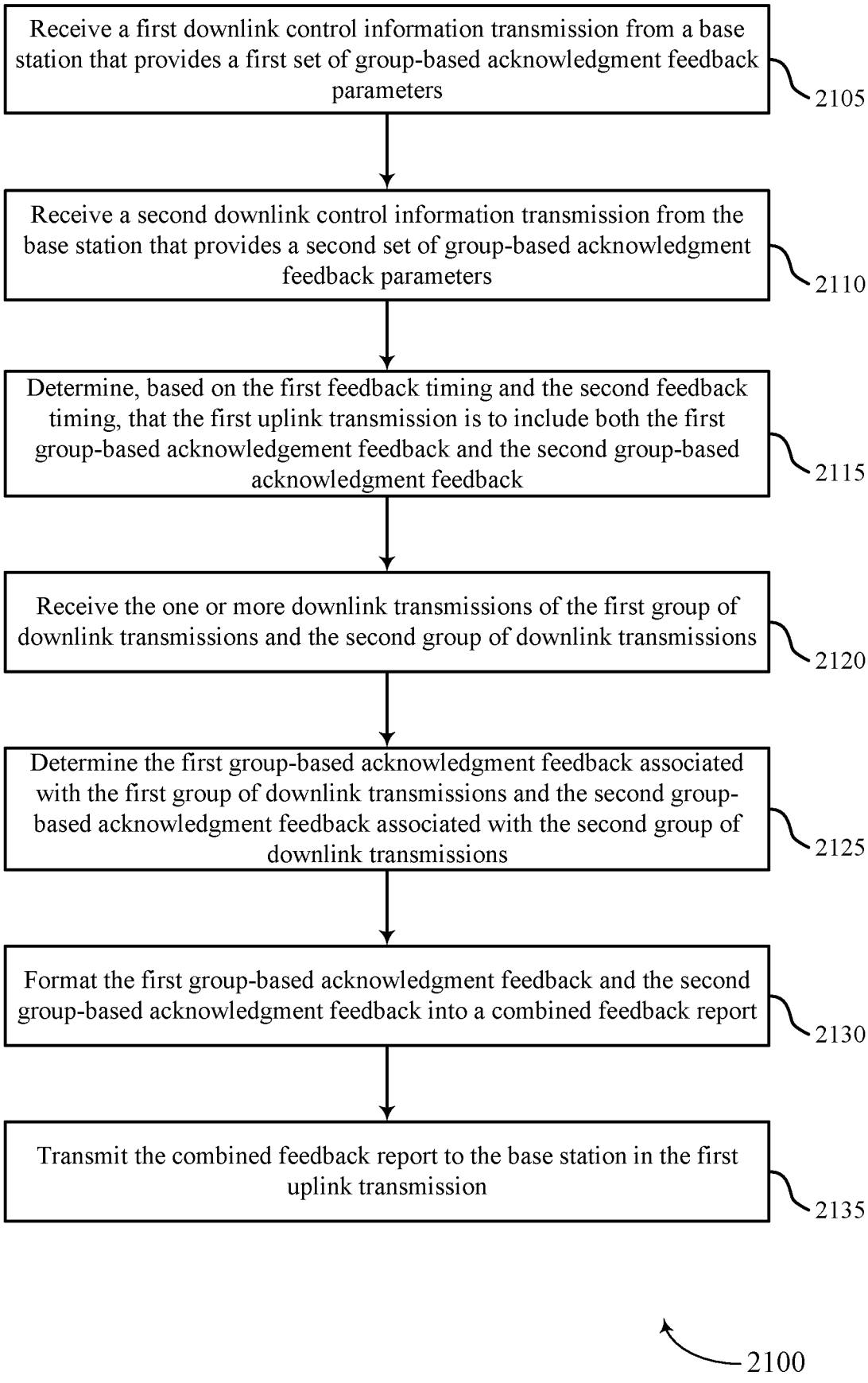
Receive a first downlink control information transmission from a base station that provides a first set of group-based acknowledgment feedback parameters
2105
Receive a second downlink control information transmission from the base station that provides a second set of group-based acknowledgment feedback parameters
2110
Determine, based on the first feedback timing and the second feedback timing, that the first uplink transmission is to include both the first group-based acknowledgement feedback and the second group-based acknowledgment feedback
2115
Receive the one or more downlink transmissions of the first group of downlink transmissions and the second group of downlink transmissions
2120
Determine the first group-based acknowledgment feedback associated with the first group of downlink transmissions and the second group-based acknowledgment feedback associated with the second group of downlink transmissions
2125
Format the first group-based acknowledgment feedback and the second group-based acknowledgment feedback into a combined feedback report
2130
Transmit the combined feedback report to the base station in the first uplink transmission
2135
2100

FIG. 21

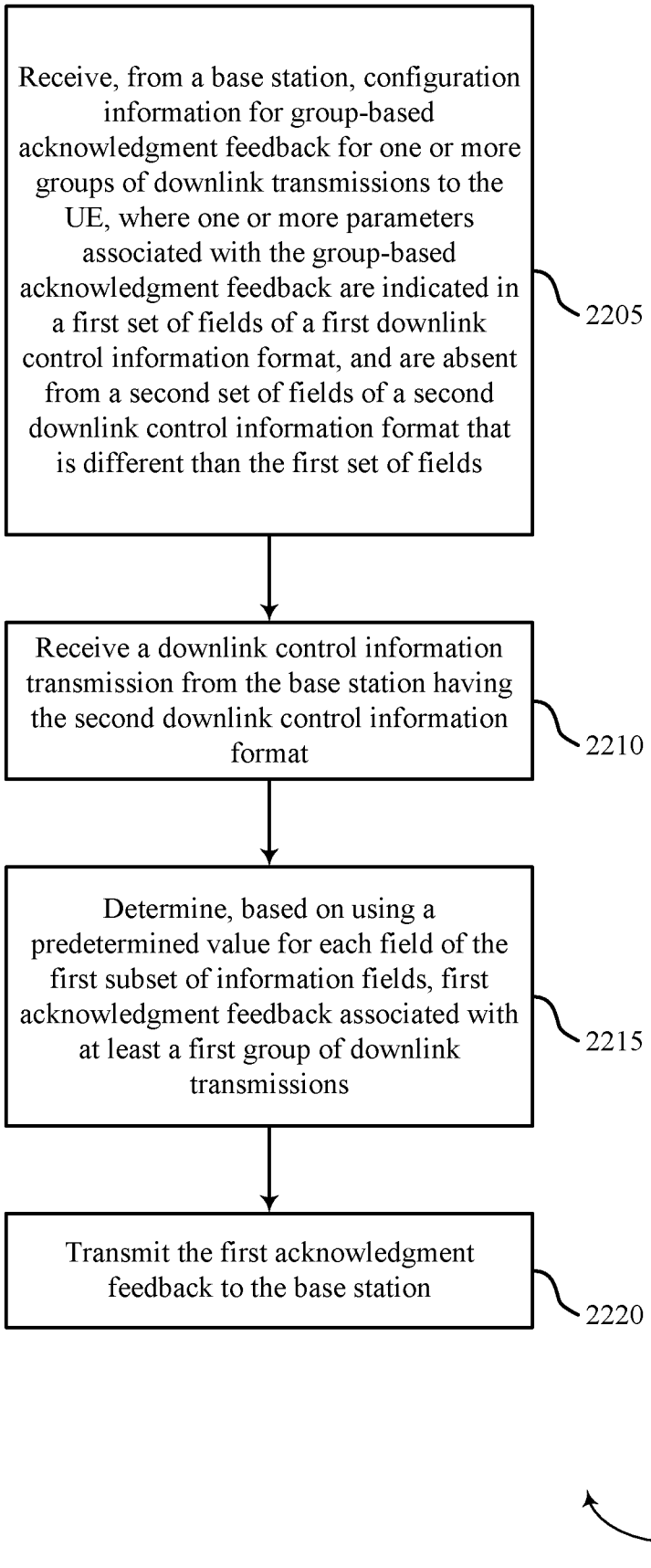
Receive, from a base station, configuration information for group-based acknowledgment feedback for one or more groups of downlink transmissions to the UE, where one or more parameters associated with the group-based acknowledgment feedback are indicated in a first set of fields of a first downlink control information format, and are absent from a second set of fields of a second downlink control information format that is different than the first set of fields
2205
Receive a downlink control information transmission from the base station having the second downlink control information format
2210
Determine, based on using a predetermined value for each field of the first subset of information fields, first acknowledgment feedback associated with at least a first group of downlink transmissions
2215
Transmit the first acknowledgment feedback to the base station
2220
2200

FIG. 22

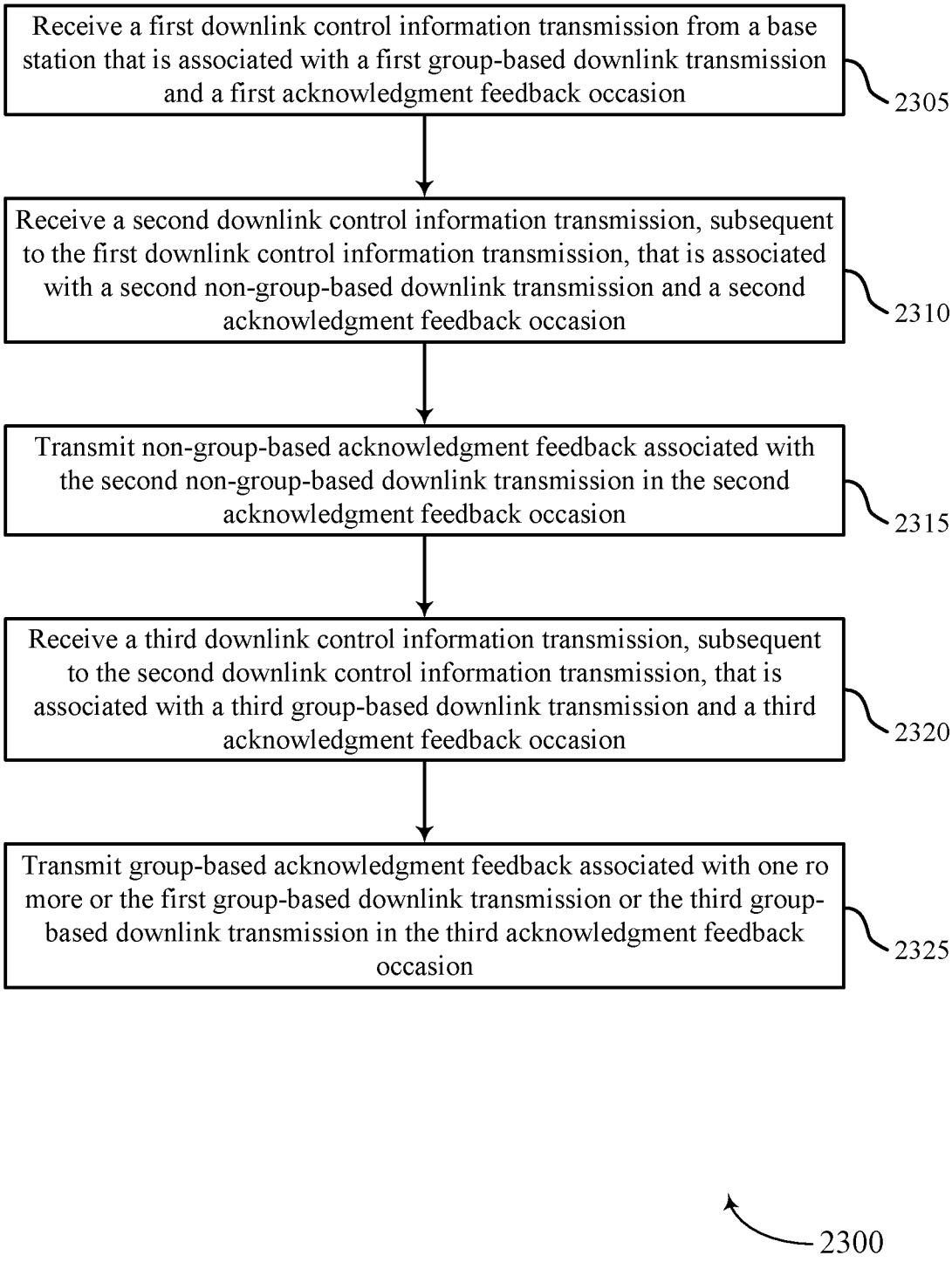
Receive a first downlink control information transmission from a base station that is associated with a first group-based downlink transmission and a first acknowledgment feedback occasion
2305
Receive a second downlink control information transmission, subsequent to the first downlink control information transmission, that is associated with a second non-group-based downlink transmission and a second acknowledgment feedback occasion
2310
Transmit non-group-based acknowledgment feedback associated with the second non-group-based downlink transmission in the second acknowledgment feedback occasion
2315
Receive a third downlink control information transmission, subsequent to the second downlink control information transmission, that is associated with a third group-based downlink transmission and a third acknowledgment feedback occasion
2320
Transmit group-based acknowledgment feedback associated with one ro more or the first group-based downlink transmission or the third group-based downlink transmission in the third acknowledgment feedback occasion
2325
2300

FIG. 23

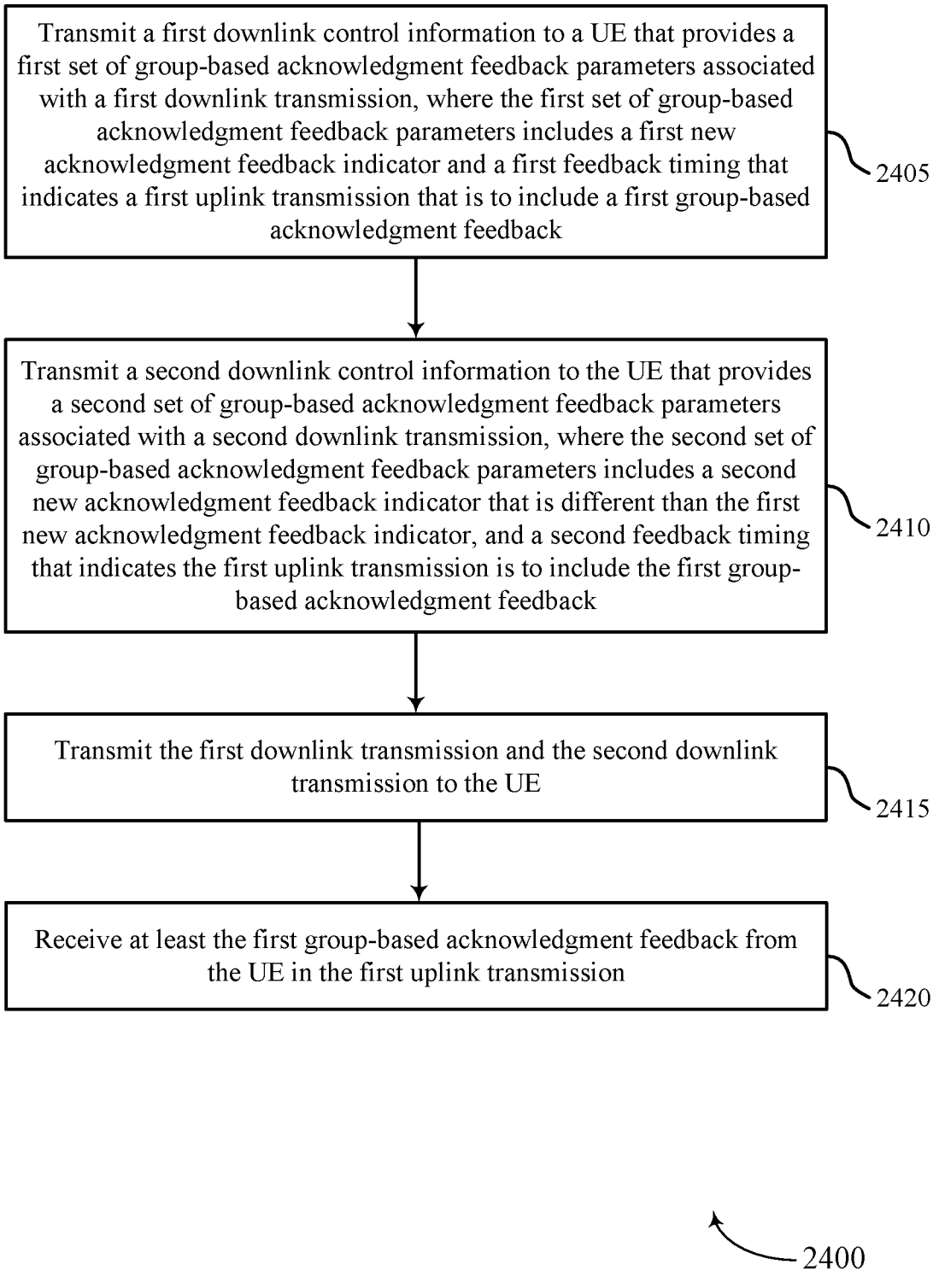
Transmit a first downlink control information to a UE that provides a first set of group-based acknowledgment feedback parameters associated with a first downlink transmission, where the first set of group-based acknowledgment feedback parameters includes a first new acknowledgment feedback indicator and a first feedback timing that indicates a first uplink transmission that is to include a first group-based acknowledgment feedback
2405
Transmit a second downlink control information to the UE that provides a second set of group-based acknowledgment feedback parameters associated with a second downlink transmission, where the second set of group-based acknowledgment feedback parameters includes a second new acknowledgment feedback indicator that is different than the first new acknowledgment feedback indicator, and a second feedback timing that indicates the first uplink transmission is to include the first group-based acknowledgment feedback
2410
Transmit the first downlink transmission and the second downlink transmission to the UE
2415
Receive at least the first group-based acknowledgment feedback from the UE in the first uplink transmission
2420
2400

FIG. 24