(12) INTERNATIONAL APPLICATION PUBLISHED UNDER THE PATENT COOPERATION TREATY (PCT)

(19) World Intellectual Property Organization
International Bureau

(43) International Publication Date
07 September 2023 (07.09.2023)

WIPO | PCT

(10) International Publication Number
WO 2023/164767 A1

(51) International Patent Classification:
G06F 16/27 (2019.01) *G06F 9/44* (2018.01)

(21) International Application Number:
PCT/CA2023/050265

(22) International Filing Date:
01 March 2023 (01.03.2023)

(25) Filing Language: English

(26) Publication Language: English

(30) Priority Data:
17/653,085 01 March 2022 (01.03.2022) US

(71) Applicant: **DLT GLOBAL, INC.** [CA/CA]; 55 University Avenue, Suite 1200, Toronto, Ontario M5J 2H7 (CA).

(72) Inventor: **SRIVASTAVA, Neeraj**; 55 University Avenue, Suite 1200, Toronto, Ontario M5J 2H7 (CA).

(74) Agent: **POWELL, Matthew**; c/o Dickinson Wright LLP, 199 Bay Street, Suite 2200, Commerce Court West, Toronto, Ontario M5L 1G4 (CA).

(81) Designated States *(unless otherwise indicated, for every kind of national protection available)*: AE, AG, AL, AM, AO, AT, AU, AZ, BA, BB, BG, BH, BN, BR, BW, BY, BZ, CA, CH, CL, CN, CO, CR, CU, CV, CZ, DE, DJ, DK, DM, DO, DZ, EC, EE, EG, ES, FI, GB, GD, GE, GH, GM, GT, HN, HR, HU, ID, IL, IN, IQ, IR, IS, IT, JM, JO, JP, KE, KG, KH, KN, KP, KR, KW, KZ, LA, LC, LK, LR, LS, LU, LY, MA, MD, MG, MK, MN, MW, MX, MY, MZ, NA, NG, NI, NO, NZ, OM, PA, PE, PG, PH, PL, PT, QA, RO, RS, RU, RW, SA, SC, SD, SE, SG, SK, SL, ST, SV, SY, TH,

(54) Title: BLOCKCHAIN RULES ENGINE

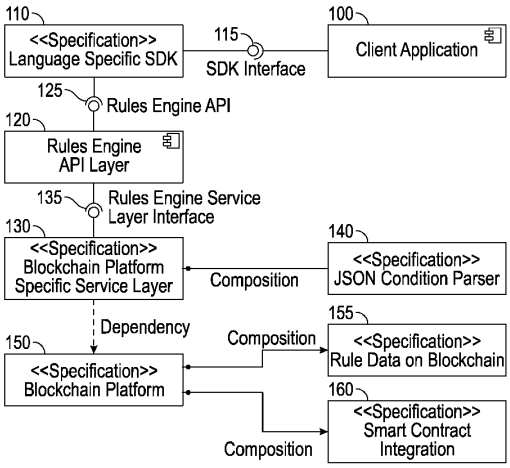

FIG. 1

(57) Abstract: A Blockchain Rules Engine is provided as a pluggable service that depicts a real-world implementation of a Rules Engine that stores rules, transactions, and results on a blockchain for use by blockchain and non-blockchain applications. The Blockchain Rules Engine manages rules implemented by a client application that interacts with a blockchain platform that manages the blockchain. The Blockchain Rules Engine includes a language specific software developer's kit (SDK) that provides an interface to the client application and that exposes rule execution functionality to the client application, a rules engine application programming interface (API) layer that provides a rules engine API to the language specific SDK and that receives and processes commands from the language specific SDK, and a blockchain platform specific service layer that interacts with the blockchain platform and accepts input from the rules engine API layer to execute business logic implemented in the rules.

WO 2023/164767 A1

[Continued on next page]

TJ, TM, TN, TR, TT, TZ, UA, UG, US, UZ, VC, VN, WS, ZA, ZM, ZW.

(84) **Designated States** *(unless otherwise indicated, for every kind of regional protection available)*: ARIPO (BW, CV, GH, GM, KE, LR, LS, MW, MZ, NA, RW, SC, SD, SL, ST, SZ, TZ, UG, ZM, ZW), Eurasian (AM, AZ, BY, KG, KZ, RU, TJ, TM), European (AL, AT, BE, BG, CH, CY, CZ, DE, DK, EE, ES, FI, FR, GB, GR, HR, HU, IE, IS, IT, LT, LU, LV, MC, ME, MK, MT, NL, NO, PL, PT, RO, RS, SE, SI, SK, SM, TR), OAPI (BF, BJ, CF, CG, CI, CM, GA, GN, GQ, GW, KM, ML, MR, NE, SN, TD, TG).

Declarations under Rule 4.17:

— *as to the identity of the inventor (Rule 4.17(i))*
— *as to applicant's entitlement to apply for and be granted a patent (Rule 4.17(ii))*

Published:

— *with international search report (Art. 21(3))*
— *in black and white; the international application as filed contained color or greyscale and is available for download from PATENTSCOPE*