(12) INTERNATIONAL APPLICATION PUBLISHED UNDER THE PATENT COOPERATION TREATY (PCT)

(19) World Intellectual Property Organization
International Bureau

(43) International Publication Date
11 January 2001 (11.01.2001)

PCT

(10) International Publication Number
WO 01/03151 A1

(51) International Patent Classification[7]: H01F 7/16, 7/06, H02K 41/03

(21) International Application Number: PCT/GB00/02563

(22) International Filing Date: 4 July 2000 (04.07.2000)

(25) Filing Language: English

(26) Publication Language: English

(30) Priority Data:
9915708.3 5 July 1999 (05.07.1999) GB
9919214.8 13 August 1999 (13.08.1999) GB

(71) Applicant *(for all designated States except US)*: KINETIC DEVELOPMENTS LIMITED [GB/GB]; MWB Business Centre, 23 Hinton Road, Bournemouth, Dorset B41 2EP (GB).

(72) Inventor; and

(75) Inventor/Applicant *(for US only)*: DENNE, Phillip, Raymond, MIchael [GB/GB]; 7 Lyndon Gate, Chine Crescent Road, Bournemouth BH2 5LW (GB).

(74) Agent: A A THORNTON & CO.; 235 High Holborn, London WC1V 7LE (GB).

(81) Designated States *(national)*: AE, AG, AL, AM, AT, AU, AZ, BA, BB, BG, BR, BY, BZ, CA, CH, CN, CR, CU, CZ, DE, DK, DM, DZ, EE, ES, FI, GB, GD, GE, GH, GM, HR, HU, ID, IL, IN, IS, JP, KE, KG, KP, KR, KZ, LC, LK, LR, LS, LT, LU, LV, MA, MD, MG, MK, MN, MW, MX, MZ, NO, NZ, PL, PT, RO, RU, SD, SE, SG, SI, SK, SL, TJ, TM, TR, TT, TZ, UA, UG, US, UZ, VN, YU, ZA, ZW.

(84) Designated States *(regional)*: ARIPO patent (GH, GM, KE, LS, MW, MZ, SD, SL, SZ, TZ, UG, ZW), Eurasian patent (AM, AZ, BY, KG, KZ, MD, RU, TJ, TM), European patent (AT, BE, CH, CY, DE, DK, ES, FI, FR, GB, GR, IE, IT, LU, MC, NL, PT, SE), OAPI patent (BF, BJ, CF, CG, CI, CM, GA, GN, GW, ML, MR, NE, SN, TD, TG).

Published:
— *With international search report.*

For two-letter codes and other abbreviations, refer to the "Guidance Notes on Codes and Abbreviations" appearing at the beginning of each regular issue of the PCT Gazette.

(54) Title: ELECTROMAGNETIC RAMS

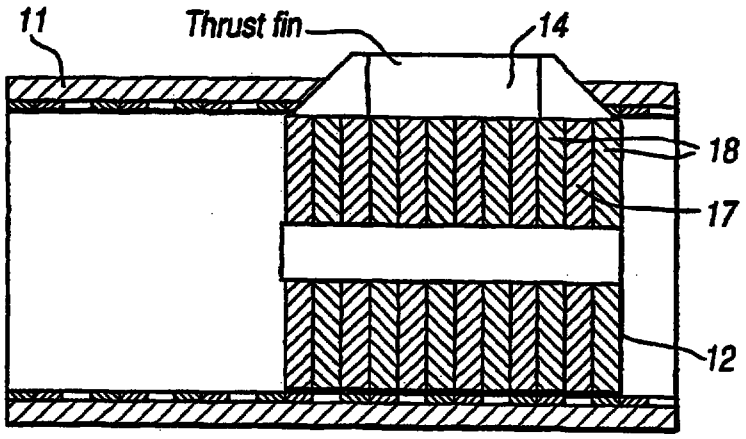

(57) Abstract: An electromagnetic ram in the form of a cylindrical magnetic assembly (11) arranged to receive a coopearing armature (12) for movement along the length of the cylinder. The armature (12) is provided with a transversely extending member (14) for transferring movement of the armature to the outside of the ram through an axially extending slot (15) in the cylinder (11).

WO 01/03151 A1