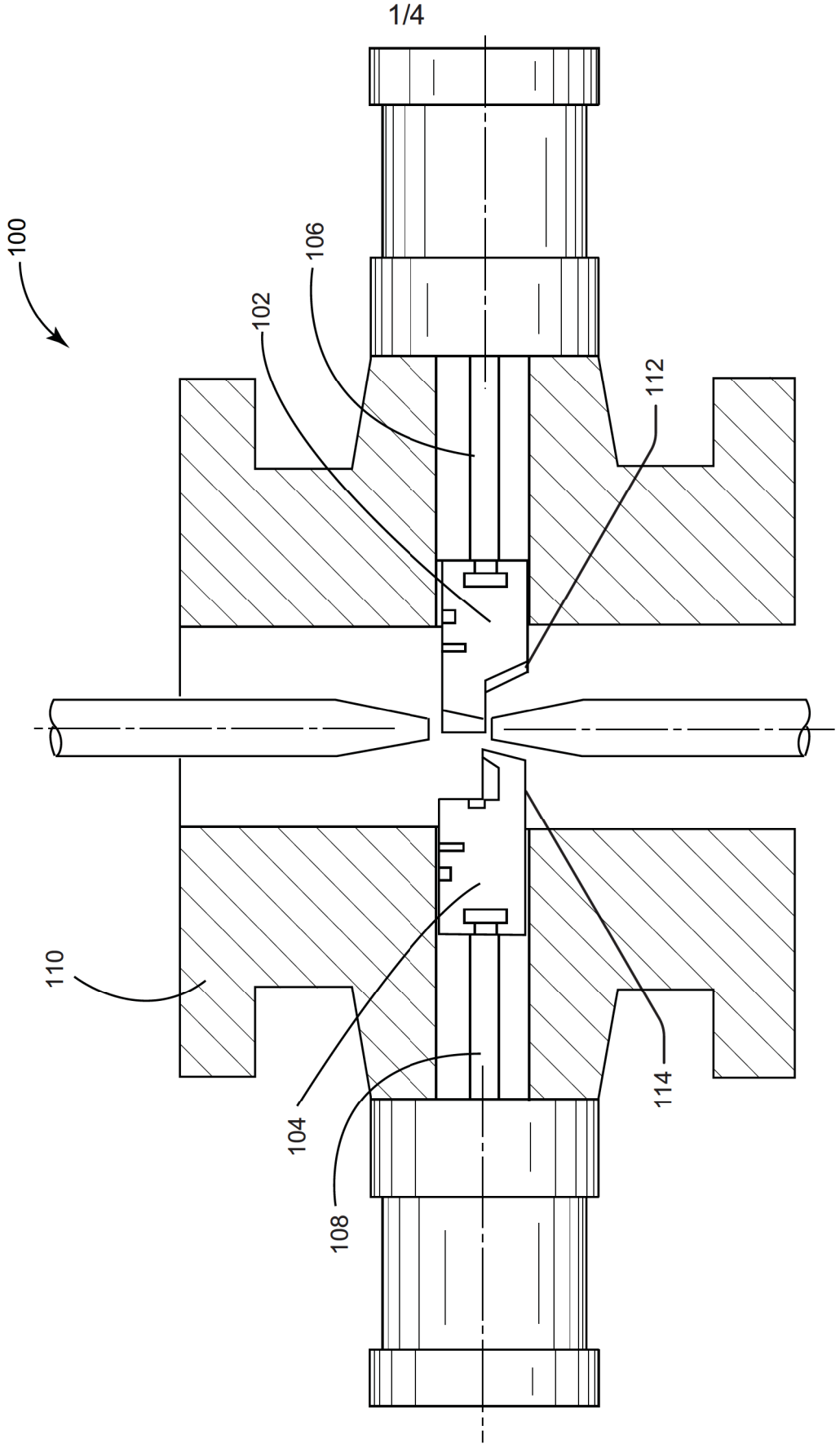

FIG. 1

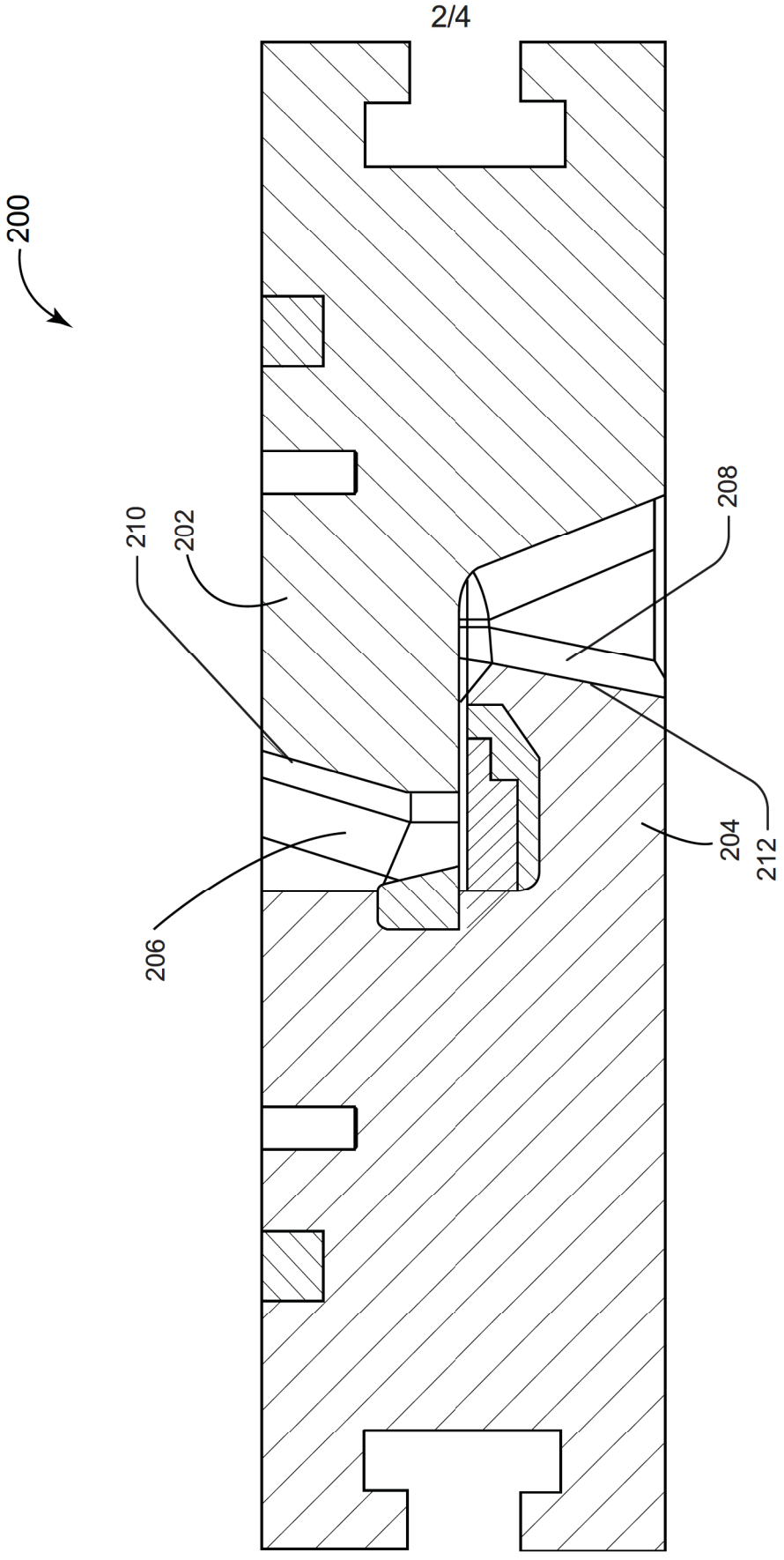

FIG. 2

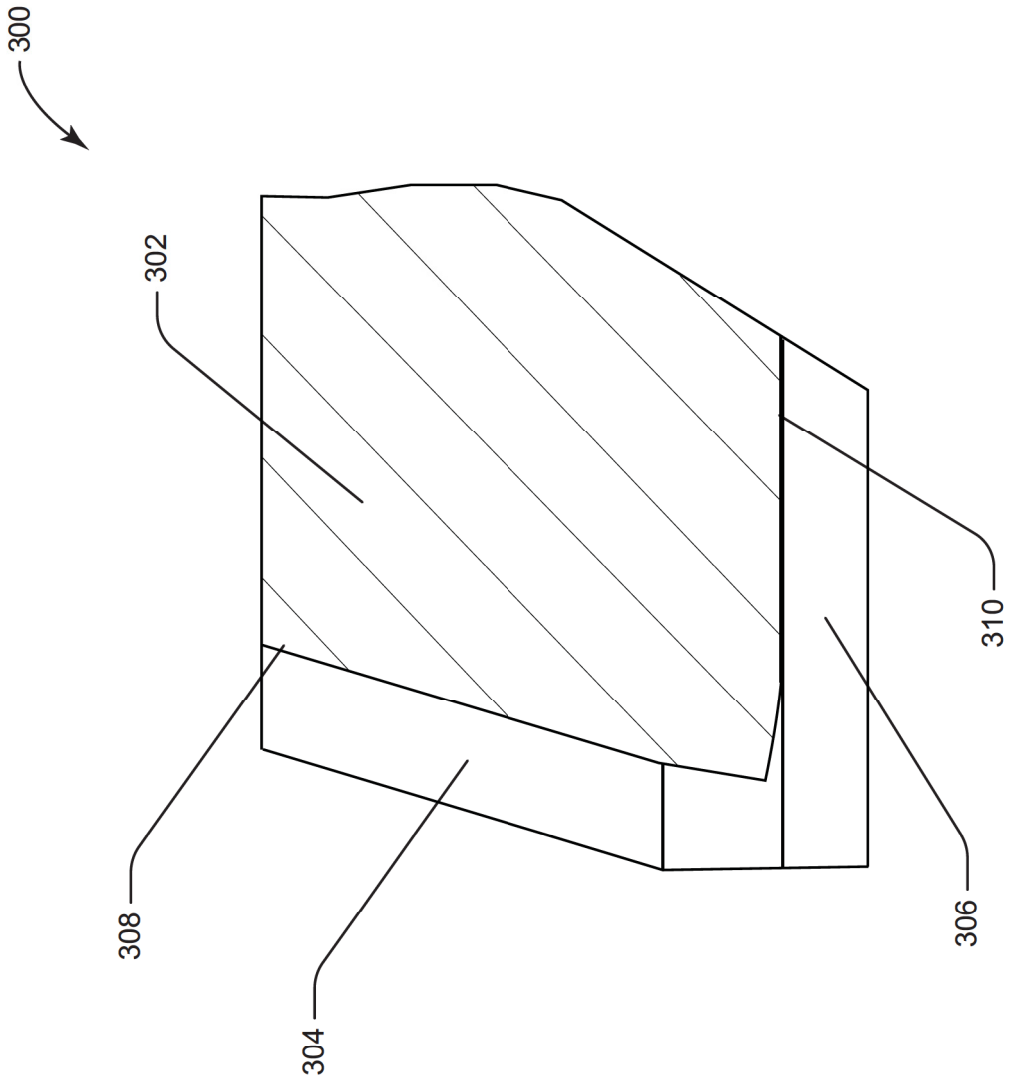

FIG. 3

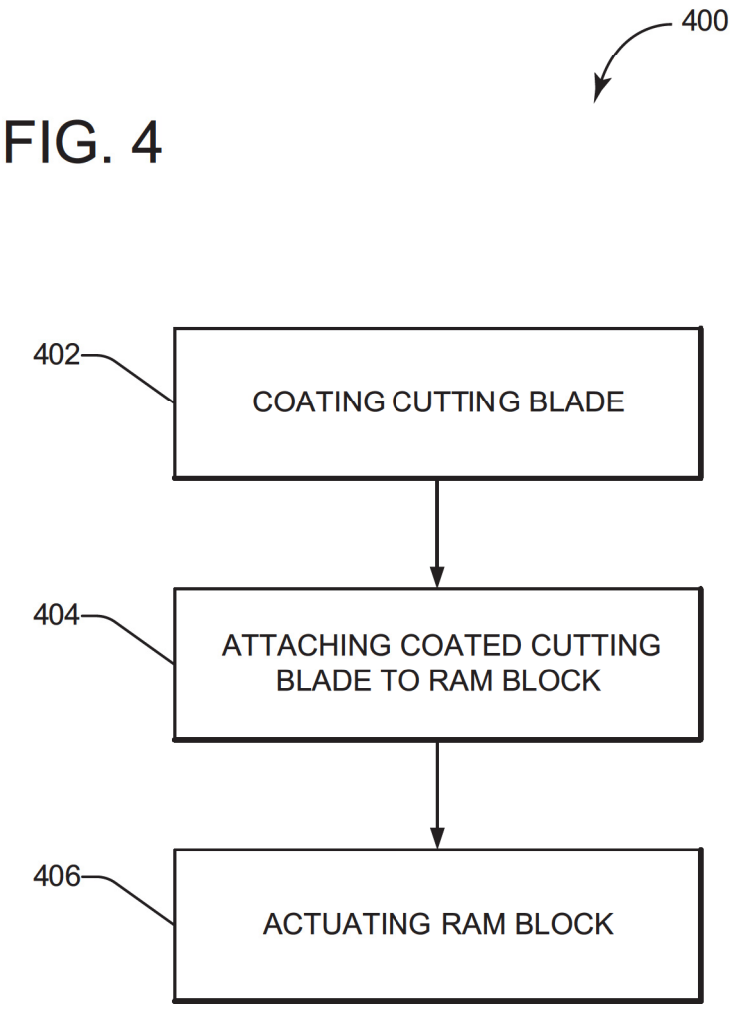
400
402
COATING CUTTING BLADE
404
ATTACHING COATED CUTTING BLADE TO RAM BLOCK
406
ACTUATING RAM BLOCK

FIG. 4