(12) INTERNATIONAL APPLICATION PUBLISHED UNDER THE PATENT COOPERATION TREATY (PCT)

(19) World Intellectual Property Organization
International Bureau

(43) International Publication Date
27 October 2011 (27.10.2011)

PCT

(10) International Publication Number
WO 2011/133250 A1

(51) International Patent Classification:
C07C 2/66 (2006.01)

(21) International Application Number:
PCT/US2011/026623

(22) International Filing Date:
1 March 2011 (01.03.2011)

(25) Filing Language: English

(26) Publication Language: English

(30) Priority Data:
12/765,119 22 April 2010 (22.04.2010) US

(71) Applicant *(for all designated States except US)*: **FINA TECHNOLOGY, INC.** [US/US]; P.O. Box 674412, Houston, TX 77267-3312 (US).

(72) Inventor; and

(75) Inventor/Applicant *(for US only)*: **BUTLER, James, R.** [US/US]; 422 Jessamine Way, League City, TX 77573 (US).

(74) Agents: **ALEXANDER, David, A.** et al.; Fina Technology, Inc., P.O.box 674412, Houston, TX 77267-4412 (US).

(81) Designated States *(unless otherwise indicated, for every kind of national protection available)*: AE, AG, AL, AM, AO, AT, AU, AZ, BA, BB, BG, BH, BR, BW, BY, BZ, CA, CH, CL, CN, CO, CR, CU, CZ, DE, DK, DM, DO, DZ, EC, EE, EG, ES, FI, GB, GD, GE, GH, GM, GT, HN, HR, HU, ID, IL, IN, IS, JP, KE, KG, KM, KN, KP, KR, KZ, LA, LC, LK, LR, LS, LT, LU, LY, MA, MD, ME, MG, MK, MN, MW, MX, MY, MZ, NA, NG, NI, NO, NZ, OM, PE, PG, PH, PL, PT, RO, RS, RU, SC, SD, SE, SG, SK, SL, SM, ST, SV, SY, TH, TJ, TM, TN, TR, TT, TZ, UA, UG, US, UZ, VC, VN, ZA, ZM, ZW.

(84) Designated States *(unless otherwise indicated, for every kind of regional protection available)*: ARIPO (BW, GH, GM, KE, LR, LS, MW, MZ, NA, SD, SL, SZ, TZ, UG, ZM, ZW), Eurasian (AM, AZ, BY, KG, KZ, MD, RU, TJ, TM), European (AL, AT, BE, BG, CH, CY, CZ, DE, DK, EE, ES, FI, FR, GB, GR, HR, HU, IE, IS, IT, LT, LU, LV, MC, MK, MT, NL, NO, PL, PT, RO, RS, SE, SI, SK, SM, TR), OAPI (BF, BJ, CF, CG, CI, CM, GA, GN, GQ, GW, ML, MR, NE, SN, TD, TG).

Published:

— *with international search report (Art. 21(3))*

WO 2011/133250 A1

(54) Title: PROCESS FOR CATALYST REGENERATION AND EXTENDED USE

FIG. 1

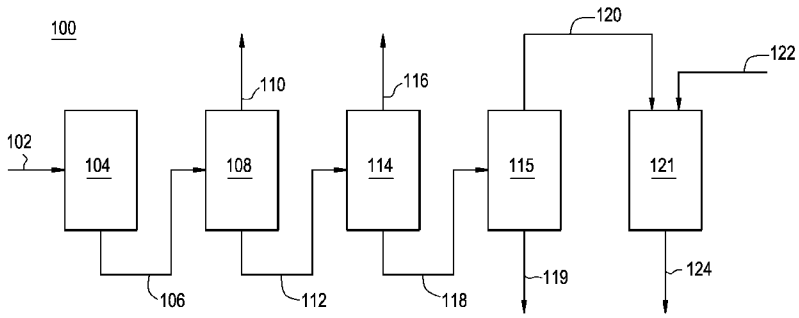

(57) Abstract: A method of producing an alkylaromatic by the alkylation of an aromatic with an alkylating agent, such as producing ethylbenzene by an alkylation reaction of benzene, is disclosed. The method includes using an H-beta catalyst to minimize process upsets due to alkylation catalyst deactivation and the resulting catalyst regeneration or replacement. The H-beta catalyst can be used in a preliminary alkylation reactor that is located upstream of the primary alkylation reactor. The H- beta catalyst used in a preliminary alkylation reactor can lead to the reactivation of the catalyst in the primary alkylation reactor.