(12) INTERNATIONAL APPLICATION PUBLISHED UNDER THE PATENT COOPERATION TREATY (PCT)

(19) World Intellectual Property Organization
International Bureau

(43) International Publication Date
20 January 2005 (20.01.2005)

PCT

(10) International Publication Number
WO 2005/004842 A3

(51) International Patent Classification[7]: A61K 9/00, 9/28

(21) International Application Number:
PCT/US2004/021004

(22) International Filing Date: 29 June 2004 (29.06.2004)

(25) Filing Language: English

(26) Publication Language: English

(30) Priority Data:
60/484,020 30 June 2003 (30.06.2003) US

(71) Applicant *(for all designated States except US)*: **ALZA CORPORATION** [US/US]; 1900 Charleston Rd., M10-3B, P.O. Box 7210, Mountain View, CA 94039-7210 (US).

(72) Inventors; and

(75) Inventors/Applicants *(for US only)*: **AMERI, Mahmoud** [US/US]; 39195 Walnut Terrace, Fremont, CA 94536 (US). **LIN, Weiqi** [US/US]; 72 Peter Coutts Circle, Palo Alto, CA 94305 (US). **CORMIER, Michel, J., N.** [US/US]; 278 Andsbury Ave., Mountain View, CA 94043 (US). **MAA, Yuh-Fun** [US/US]; 651 Sequoia Ave., Millbrae, CA 94030 (US).

(74) Agent: **FRANCIS, Ralph, C.**; Alza Corporation, c/o Johnson & Johnson, One Johnson & Johnson Plaza WH3221, New Brunswick, NJ 08933 (US).

(81) Designated States *(unless otherwise indicated, for every kind of national protection available)*: AE, AG, AL, AM, AT, AU, AZ, BA, BB, BG, BR, BW, BY, BZ, CA, CH, CN, CO, CR, CU, CZ, DE, DK, DM, DZ, EC, EE, EG, ES, FI, GB, GD, GE, GH, GM, HR, HU, ID, IL, IN, IS, JP, KE, KG, KP, KR, KZ, LC, LK, LR, LS, LT, LU, LV, MA, MD, MG, MK, MN, MW, MX, MZ, NA, NI, NO, NZ, OM, PG, PH, PL, PT, RO, RU, SC, SD, SE, SG, SK, SL, SY, TJ, TM, TN, TR, TT, TZ, UA, UG, US, UZ, VC, VN, YU, ZA, ZM, ZW.

(84) Designated States *(unless otherwise indicated, for every kind of regional protection available)*: ARIPO (BW, GH, GM, KE, LS, MW, MZ, NA, SD, SL, SZ, TZ, UG, ZM, ZW), Eurasian (AM, AZ, BY, KG, KZ, MD, RU, TJ, TM), European (AT, BE, BG, CH, CY, CZ, DE, DK, EE, ES, FI, FR, GB, GR, HU, IE, IT, LU, MC, NL, PL, PT, RO, SE, SI, SK, TR), OAPI (BF, BJ, CF, CG, CI, CM, GA, GN, GQ, GW, ML, MR, NE, SN, TD, TG).

Published:
— *with international search report*

[Continued on next page]

(54) Title: FORMULATIONS FOR COATED MICROPROJECTIONS CONTAINING NON-VOLATILE COUNTERIONS

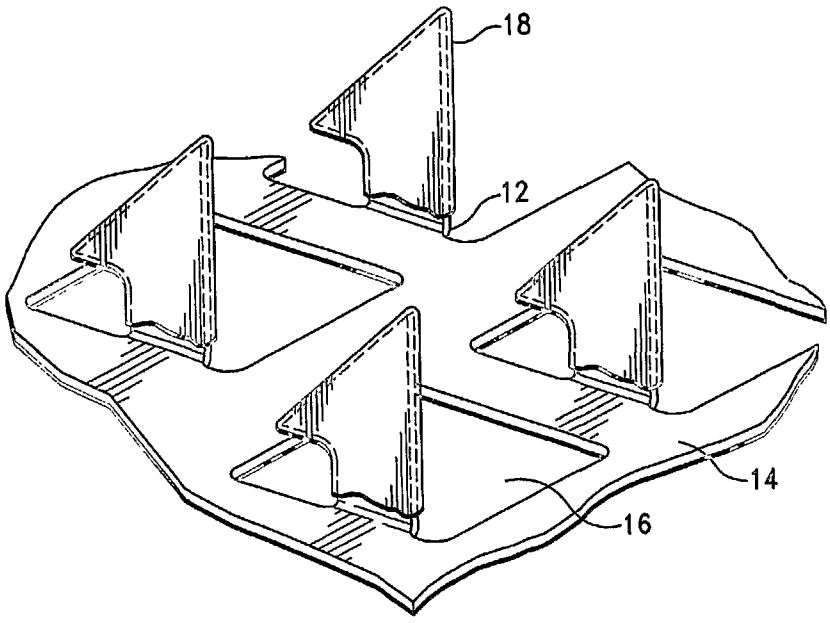

(57) Abstract: The invention provides for a formulation for coating one or more microprojections which reduces or minimizes the loss of counterions from the coating in order to achieve a pH-stabilized formulation.

WO 2005/004842 A3

— *before the expiration of the time limit for amending the claims and to be republished in the event of receipt of amendments*

(88) Date of publication of the international search report:
21 April 2005

For two-letter codes and other abbreviations, refer to the "Guidance Notes on Codes and Abbreviations" appearing at the beginning of each regular issue of the PCT Gazette.