(12) INTERNATIONAL APPLICATION PUBLISHED UNDER THE PATENT COOPERATION TREATY (PCT)

(19) World Intellectual Property Organization
International Bureau

(43) International Publication Date
21 January 2010 (21.01.2010)

PCT

(10) International Publication Number
WO 2010/009345 A1

(51) International Patent Classification:
H04M 1/725 (2006.01) *H04R 3/00* (2006.01)

(21) International Application Number:
PCT/US2009/050902

(22) International Filing Date:
16 July 2009 (16.07.2009)

(25) Filing Language: English

(26) Publication Language: English

(30) Priority Data:

61/081,309	16 July 2008 (16.07.2008)	US
12/503,788	15 July 2009 (15.07.2009)	US

(71) Applicant *(for all designated States except US)*: **QUALCOMM INCORPORATED** [US/US]; 5775 Morehouse Drive, San Diego, CA 92121 (US).

(72) Inventor; and

(75) Inventor/Applicant *(for US only)*: **SCHRAGE, Jeremy** [US/US]; 5775 Morehouse Drive, San Diego, CA 92121 (US).

(74) Agent: **DIAZ HIDALGO, Espartaco**; 5775 Morehouse Drive, San Diego, CA 92121 (US).

(81) Designated States *(unless otherwise indicated, for every kind of national protection available)*: AE, AG, AL, AM, AO, AT, AU, AZ, BA, BB, BG, BH, BR, BW, BY, BZ, CA, CH, CL, CN, CO, CR, CU, CZ, DE, DK, DM, DO, DZ, EC, EE, EG, ES, FI, GB, GD, GE, GH, GM, GT, HN, HR, HU, ID, IL, IN, IS, JP, KE, KG, KM, KN, KP, KR, KZ, LA, LC, LK, LR, LS, LT, LU, LY, MA, MD, ME, MG, MK, MN, MW, MX, MY, MZ, NA, NG, NI, NO, NZ, OM, PE, PG, PH, PL, PT, RO, RS, RU, SC, SD, SE, SG, SK, SL, SM, ST, SV, SY, TJ, TM, TN, TR, TT, TZ, UA, UG, US, UZ, VC, VN, ZA, ZM, ZW.

(84) Designated States *(unless otherwise indicated, for every kind of regional protection available)*: ARIPO (BW, GH, GM, KE, LS, MW, MZ, NA, SD, SL, SZ, TZ, UG, ZM, ZW), Eurasian (AM, AZ, BY, KG, KZ, MD, RU, TJ, TM), European (AT, BE, BG, CH, CY, CZ, DE, DK, EE, ES, FI, FR, GB, GR, HR, HU, IE, IS, IT, LT, LU, LV, MC, MK, MT, NL, NO, PL, PT, RO, SE, SI, SK, SM, TR), OAPI (BF, BJ, CF, CG, CI, CM, GA, GN, GQ, GW, ML, MR, NE, SN, TD, TG).

Declarations under Rule 4.17:

— *as to applicant's entitlement to apply for and be granted a patent (Rule 4.17(ii))*

— *as to the applicant's entitlement to claim the priority of the earlier application (Rule 4.17(iii))*

Published:

— *with international search report (Art. 21(3))*

— *before the expiration of the time limit for amending the claims and to be republished in the event of receipt of amendments (Rule 48.2(h))*

(54) Title: METHOD AND APPARATUS FOR PROVIDING AUDIBLE, VISUAL OR TACTILE SIDETONE FEEDBACK NOTIFICATION TO A USER OF A COMMUNICATION DEVICE WITH MULTIPLE MICROPHONES

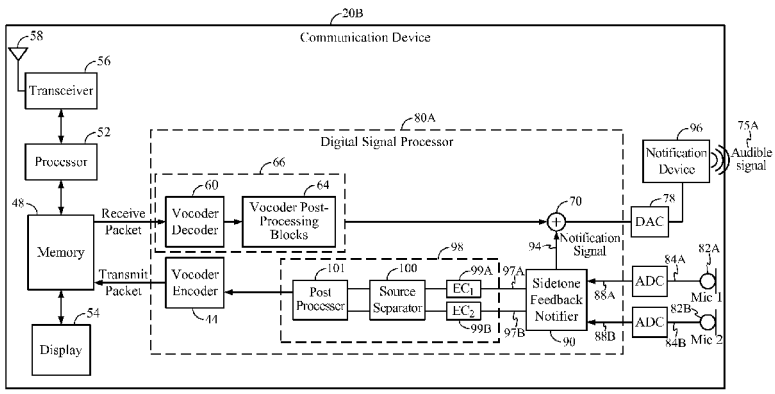

FIG. 3

(57) Abstract: A communication device including multiple microphones is provided. The communication device includes at least two microphones. The communication device further includes a sidetone feedback notifier for producing a notification signal. The sidetone feedback notifier is coupled to the microphones. The notification signal is based on the combination of, a first input audio signal provided for by a first microphone, and a second input audio signal provided for by a second microphone. The sidetone feedback notifier is coupled to a notification device for providing a feedback signal to a user based on the notification signal, which may be an audible, a visual or a tactile signal.

WO 2010/009345 A1