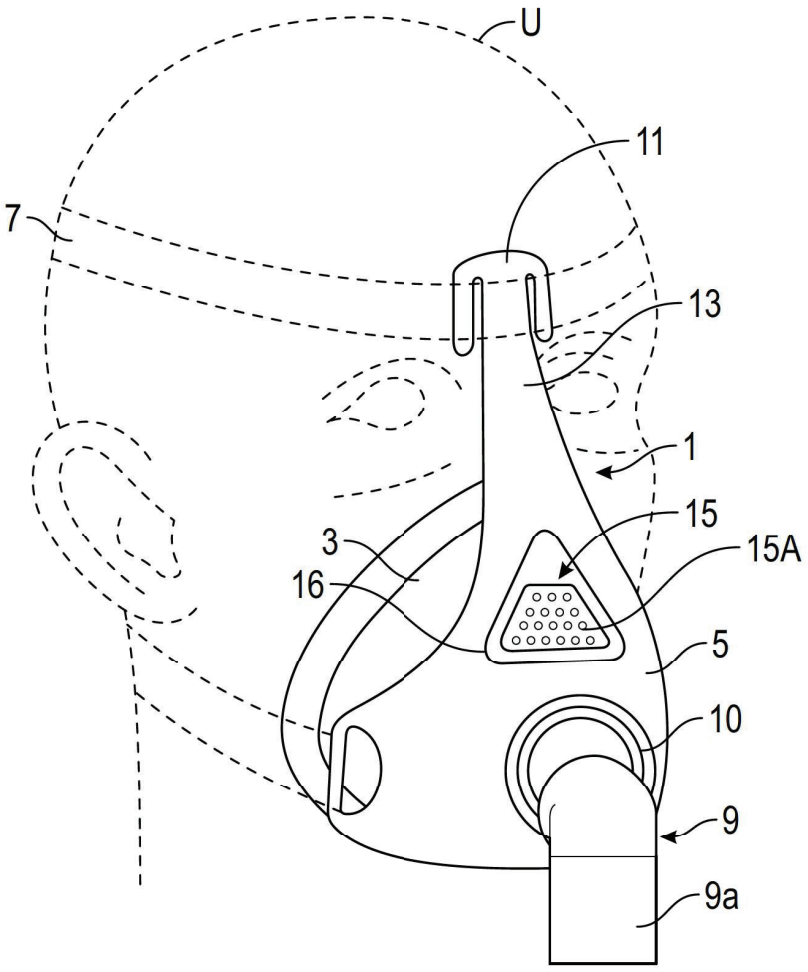

FIG. 1

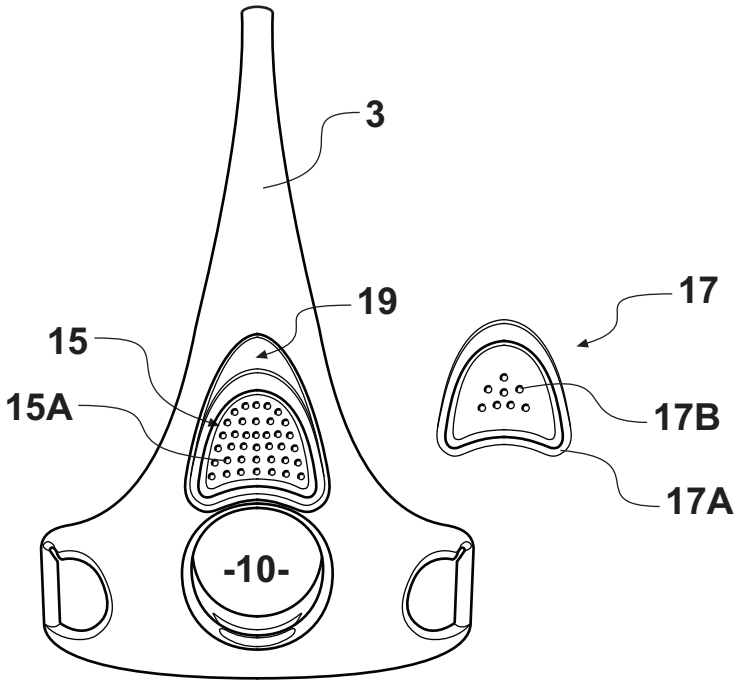

Figure 2

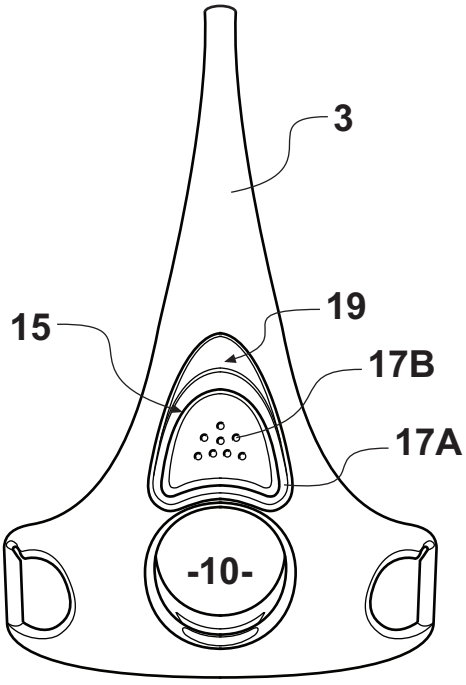

Figure 3

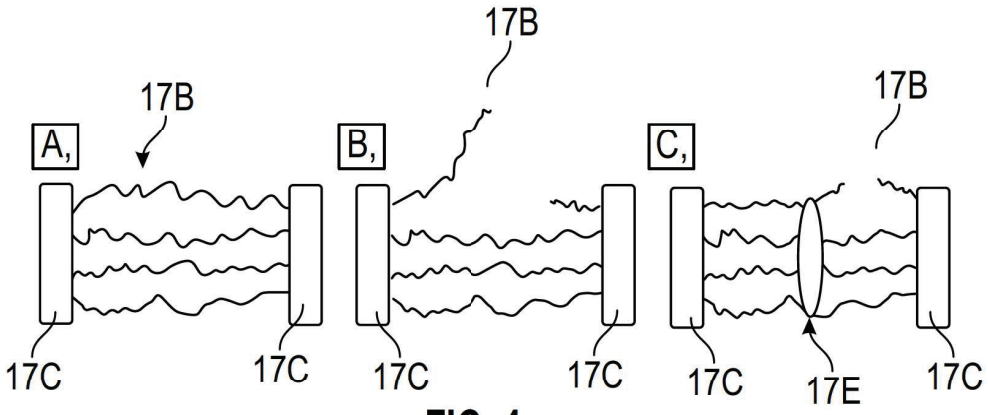
A,
B,
C,
17B
17B
17B
17C
17C
17C
17C
17C
17E
17C

FIG. 4

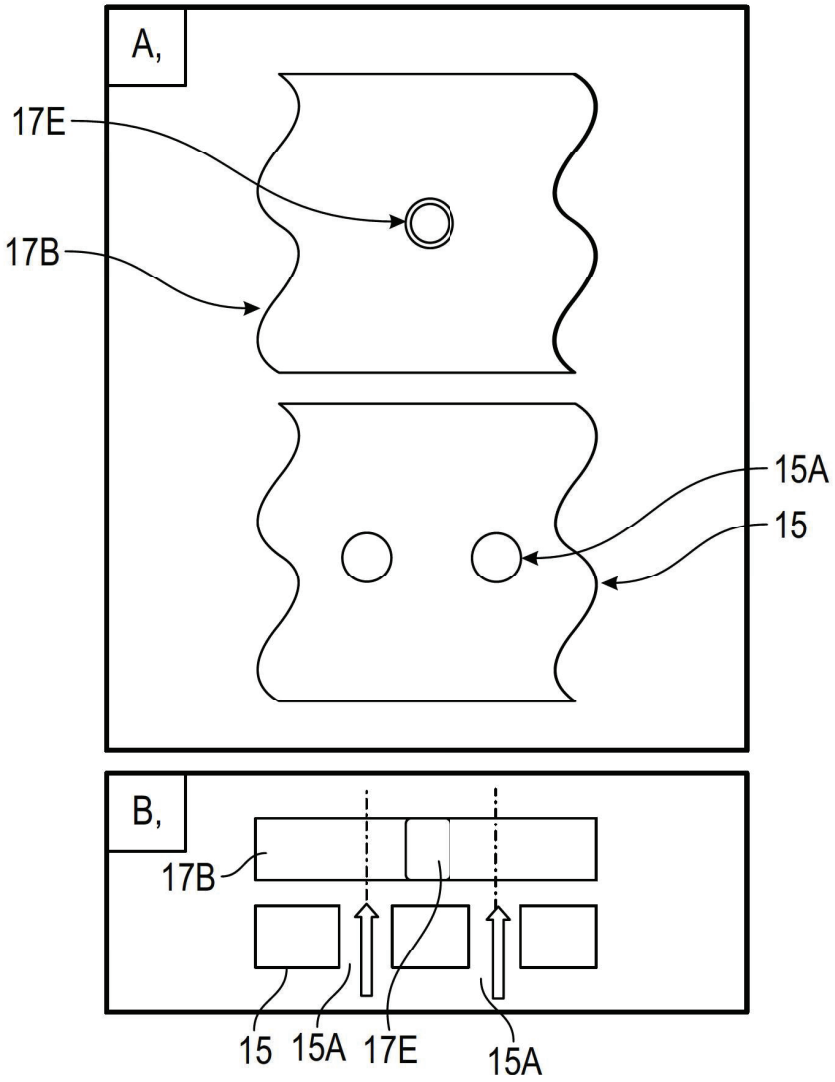
A,
17E
17B
15A
15
B,
17B
15
15A
17E
15A

FIG. 5

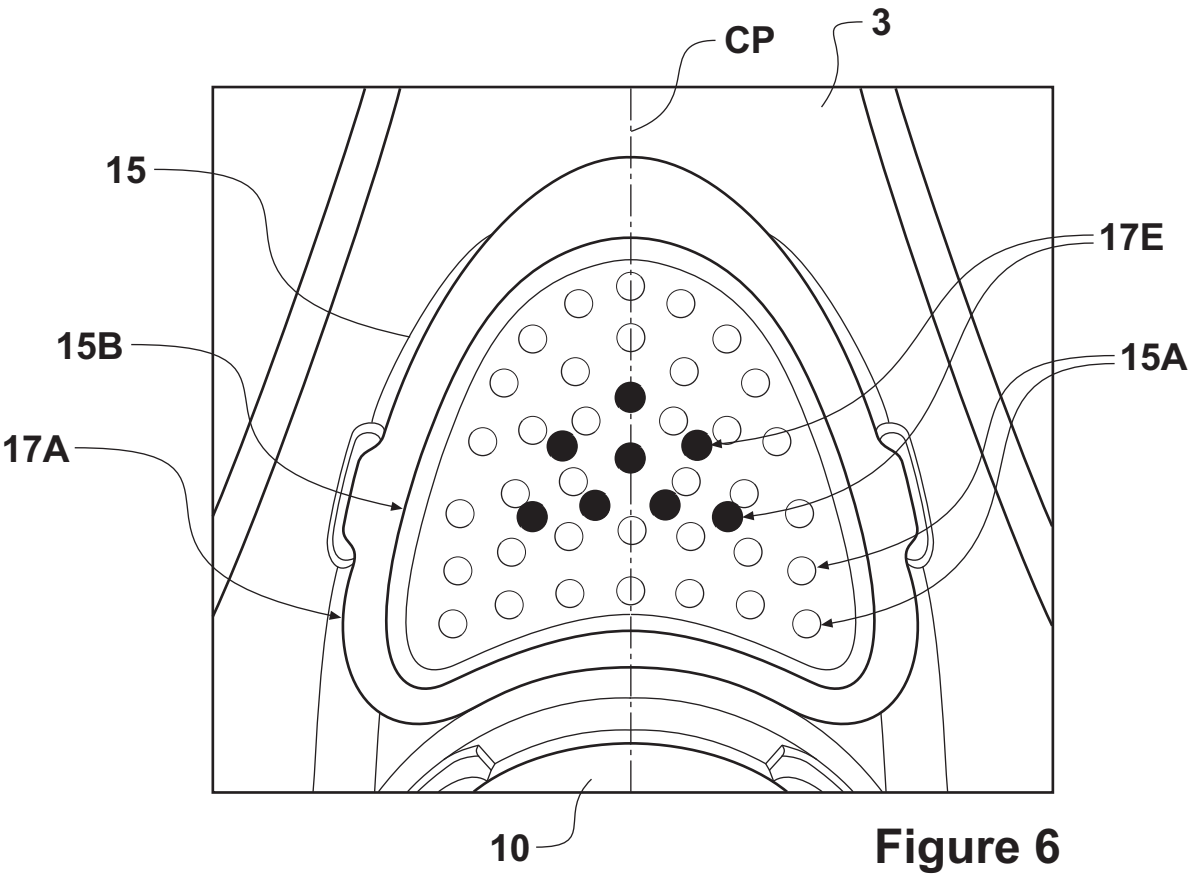

Figure 6

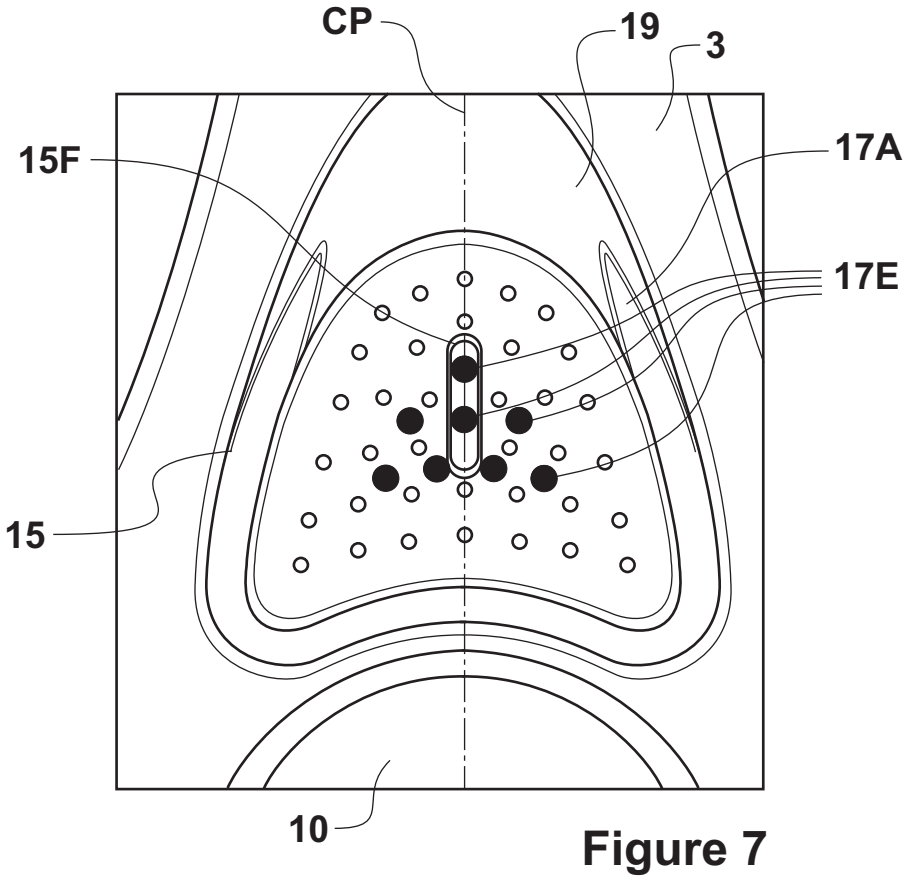

Figure 7

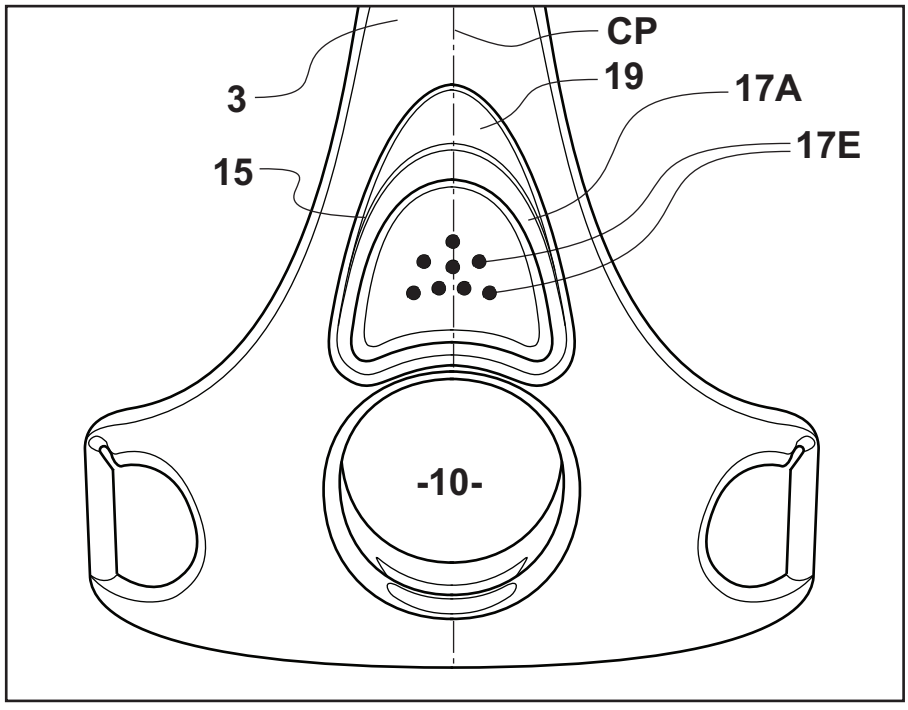

Figure 8

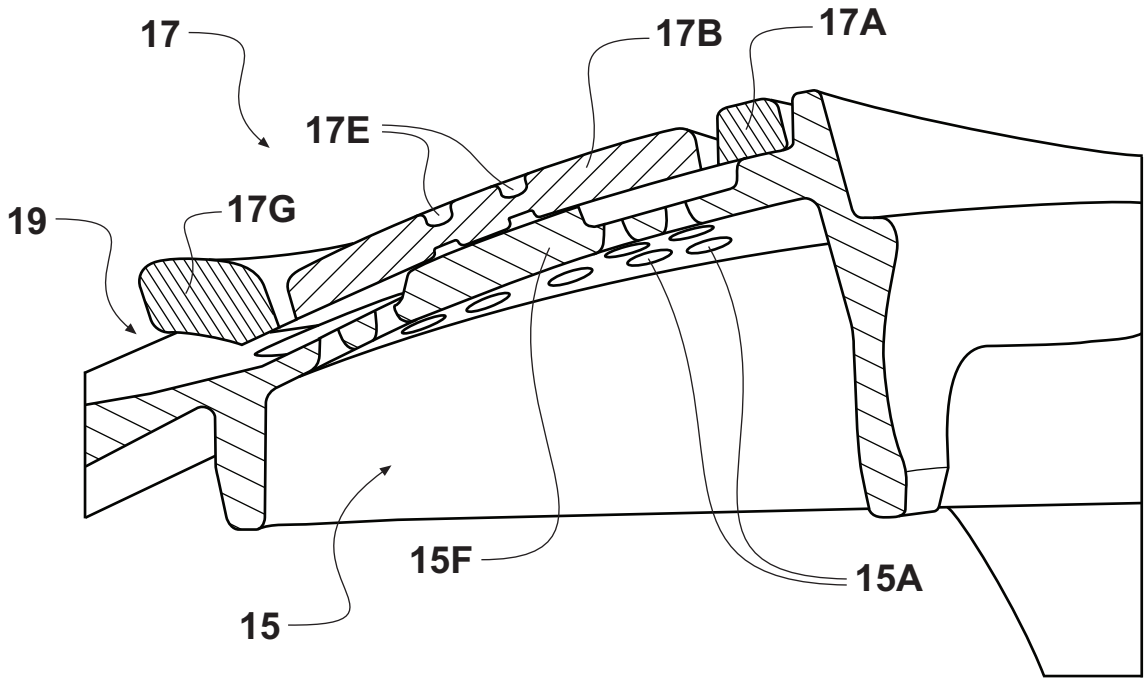

Figure 9

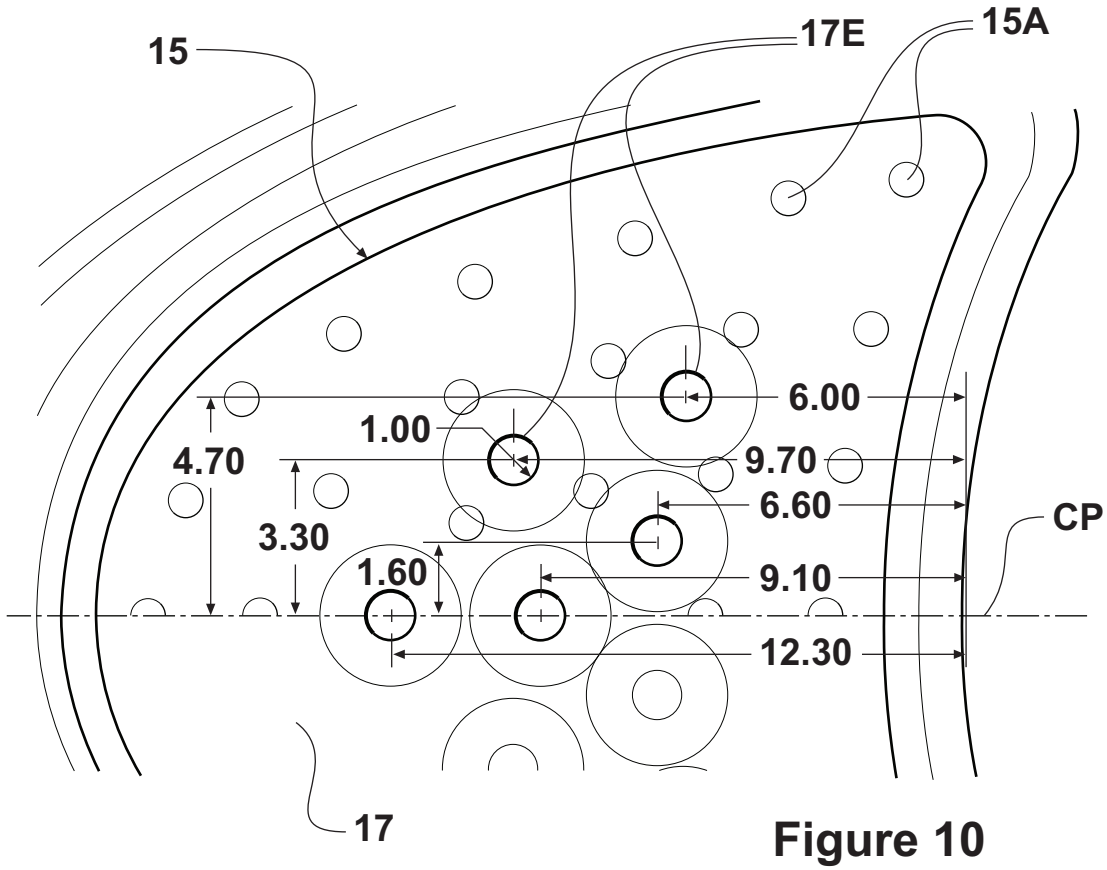

Figure 10

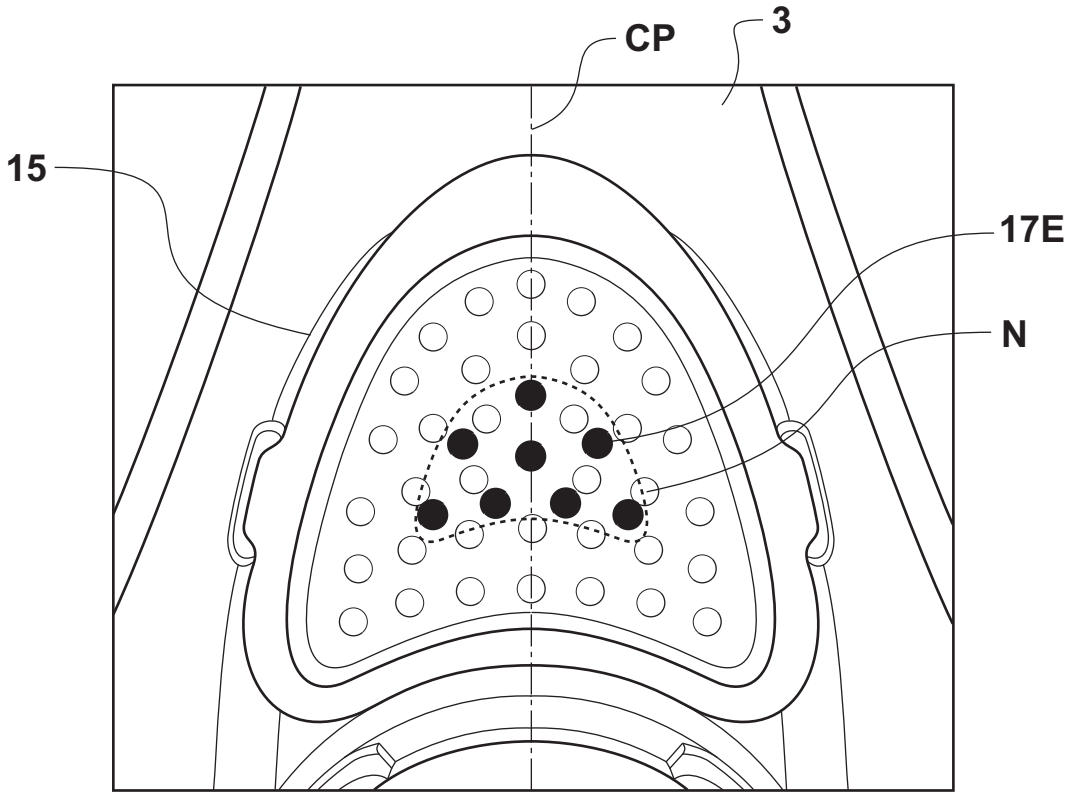

Figure 11A

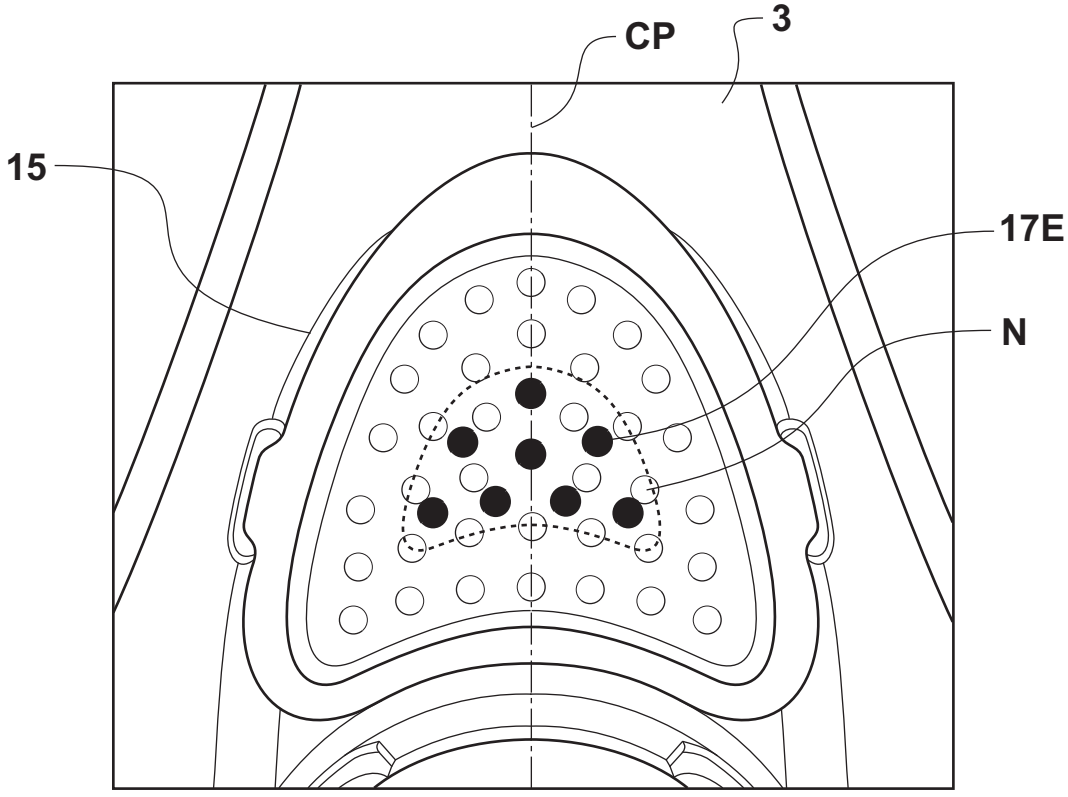

Figure 11B

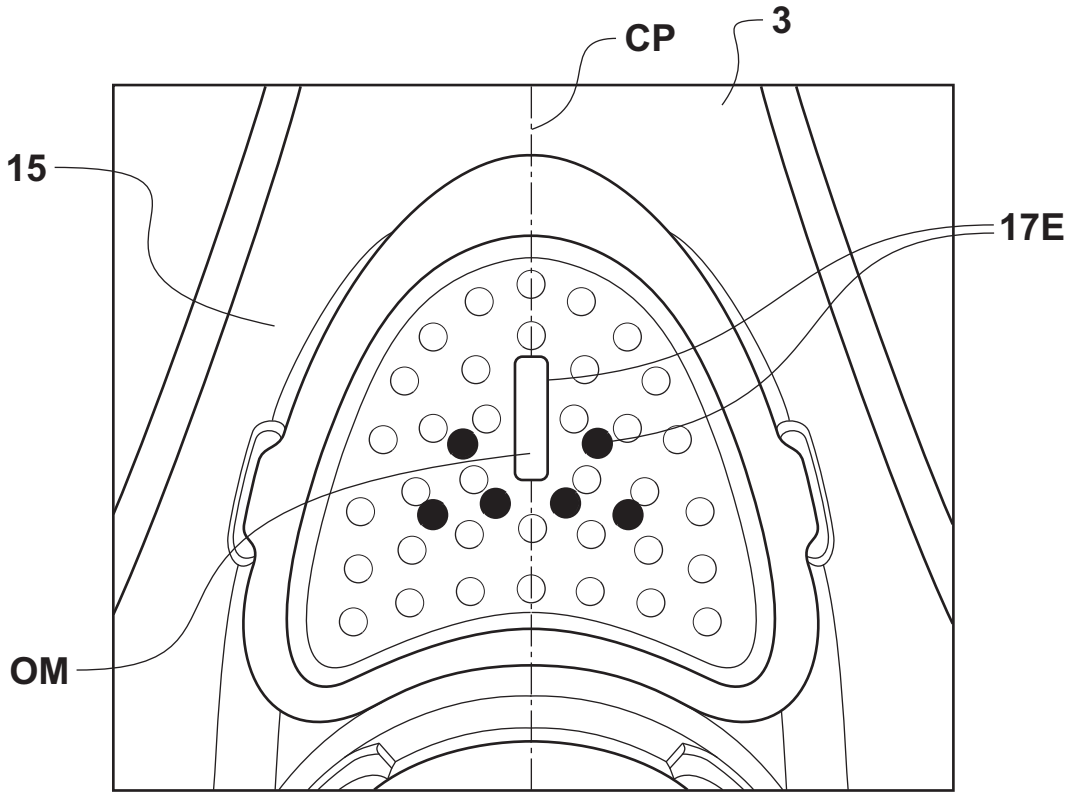

Figure 12

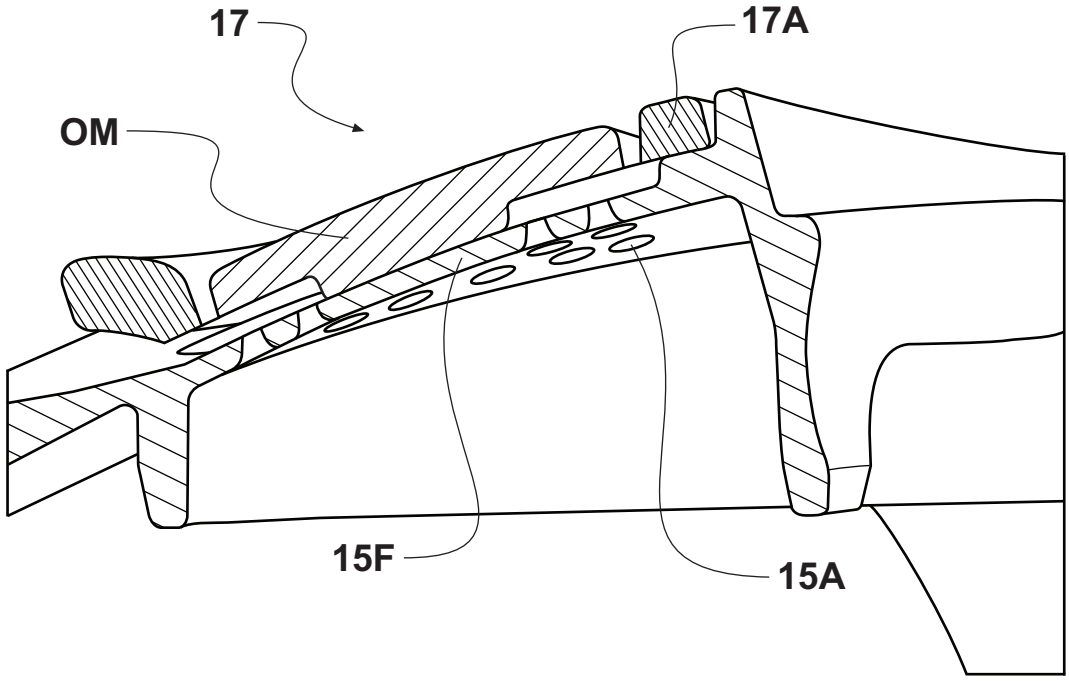

Figure 13