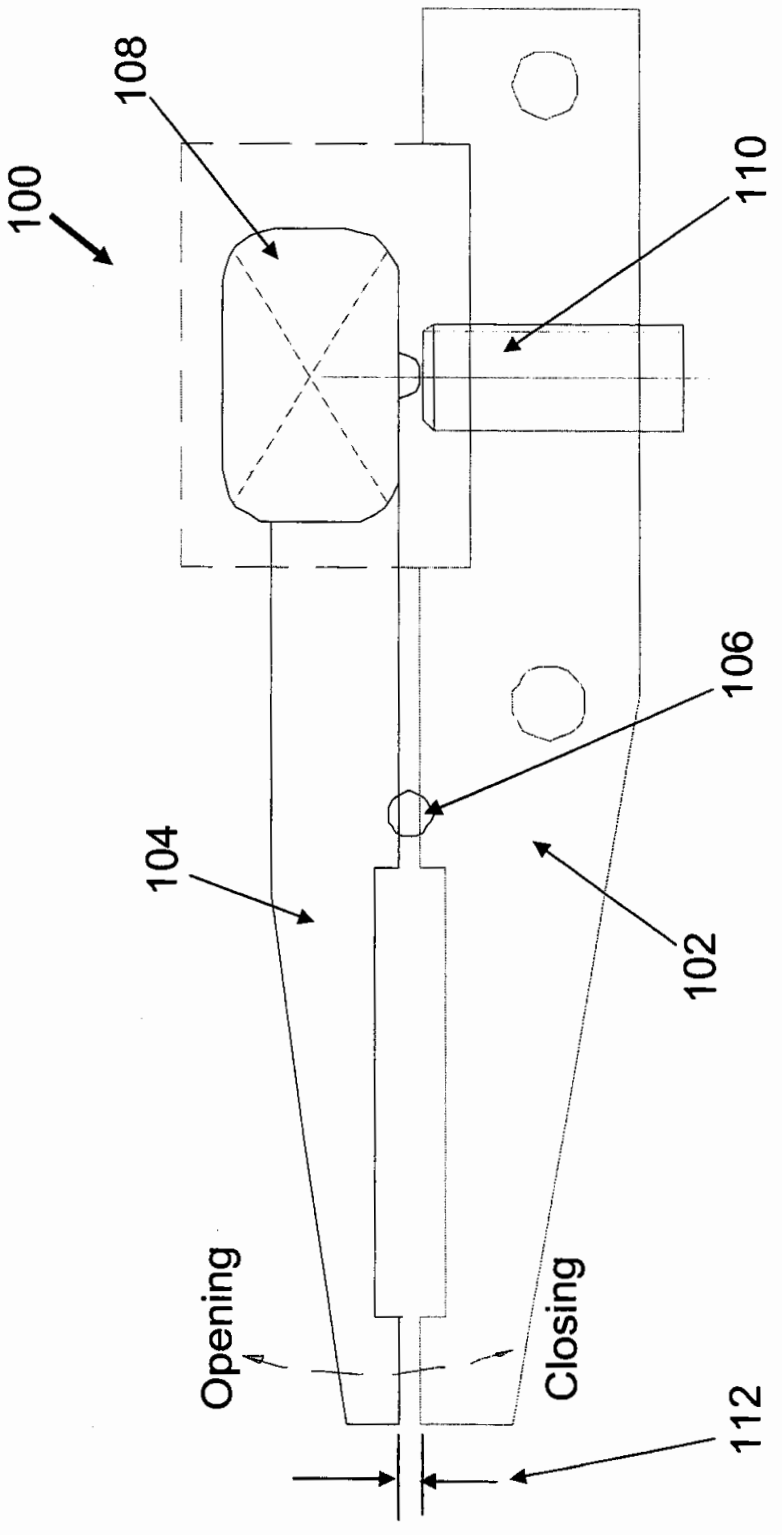

FIG. 1 (Prior Art)

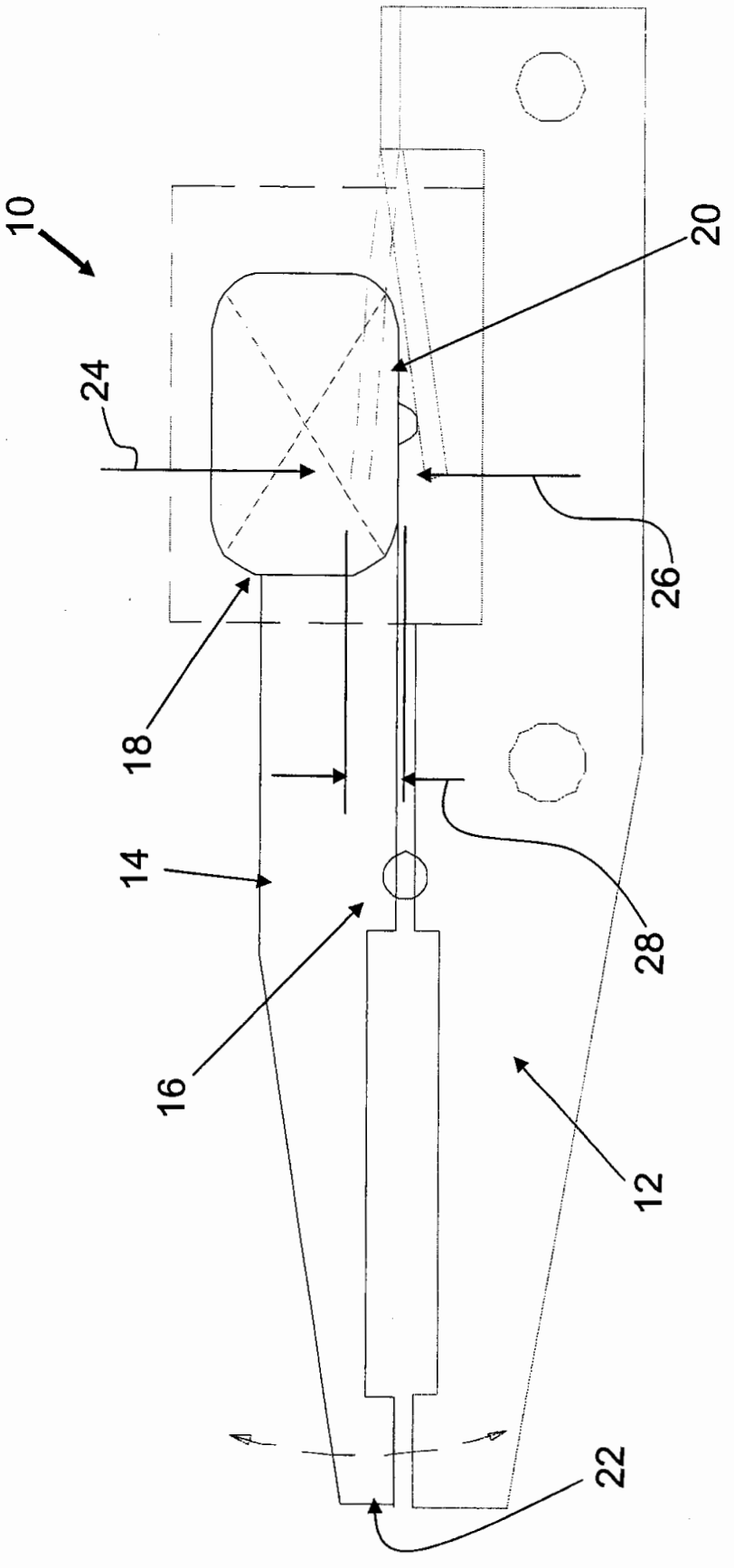

FIG. 2

2/7

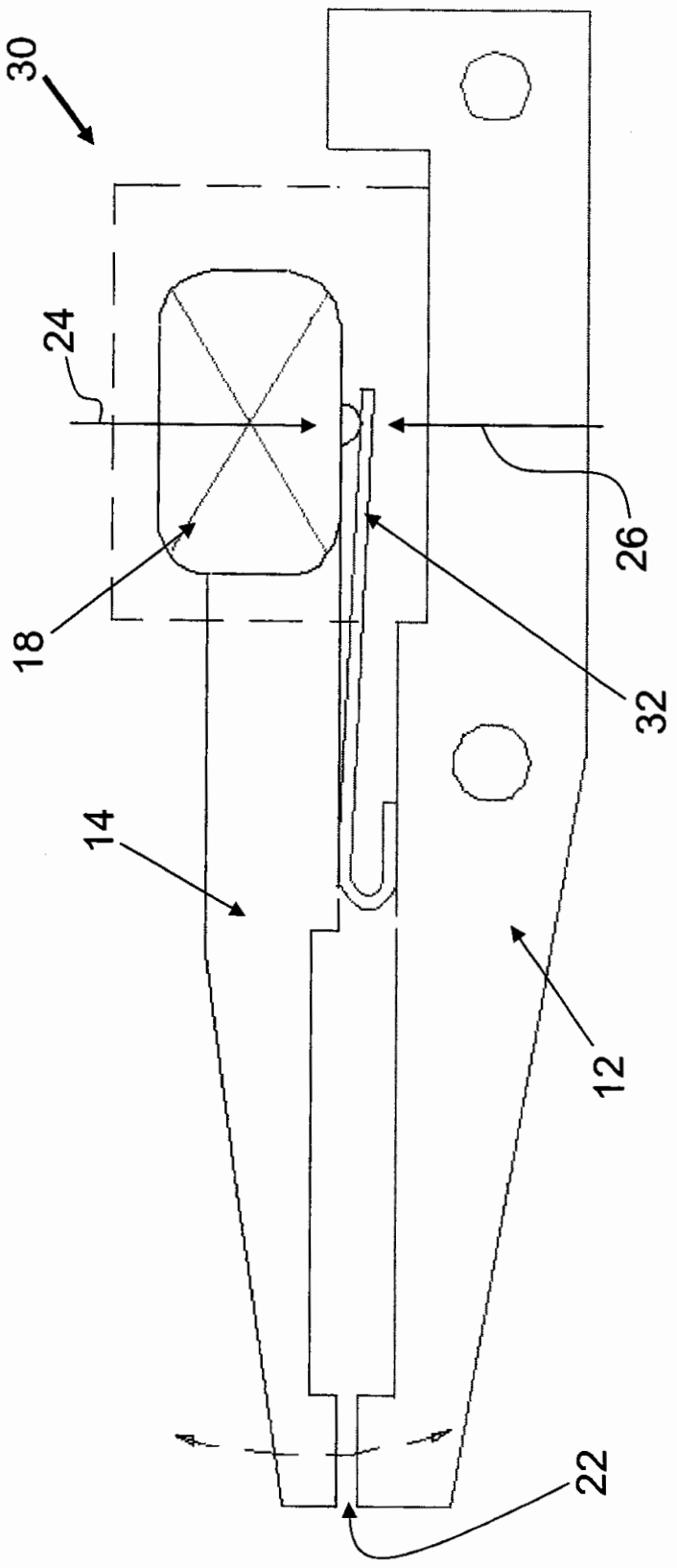

FIG. 3

3/7

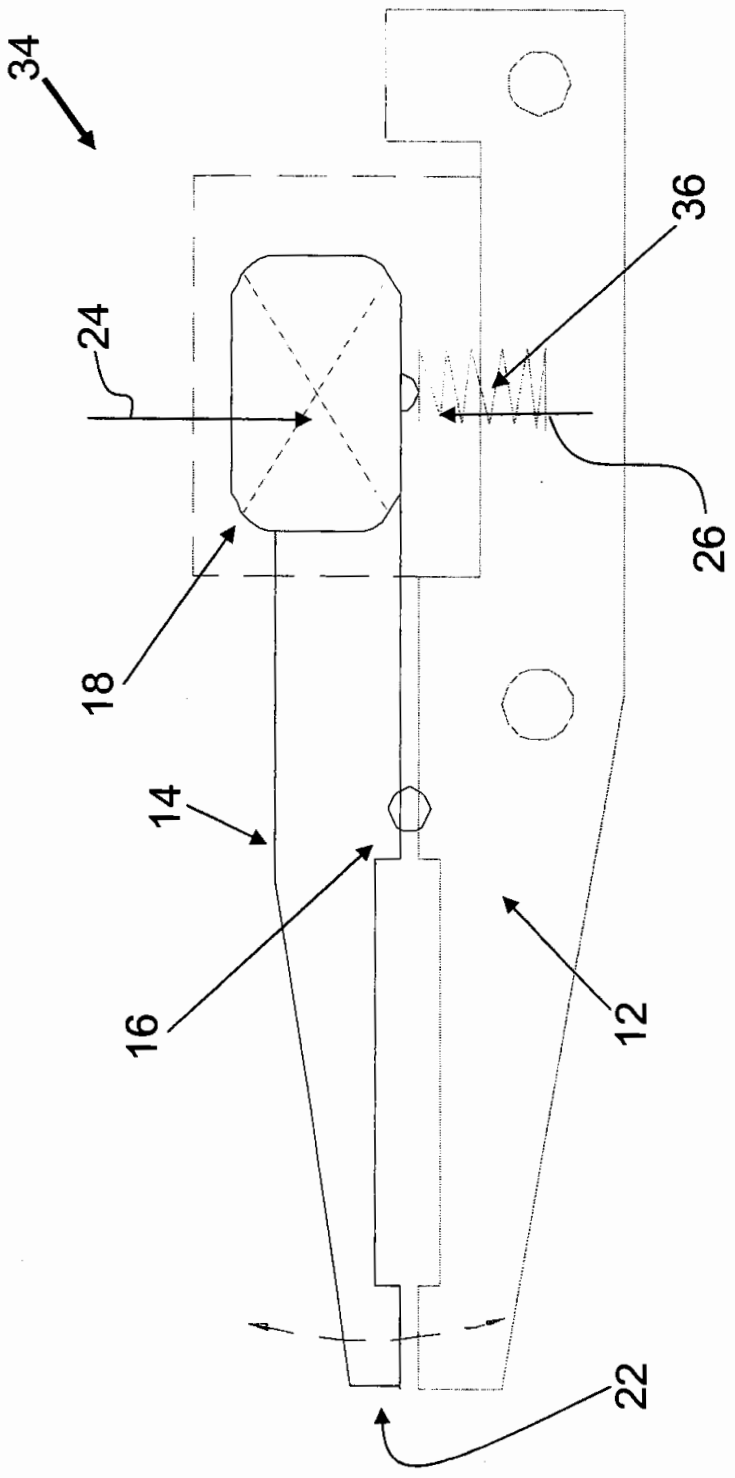

FIG. 4

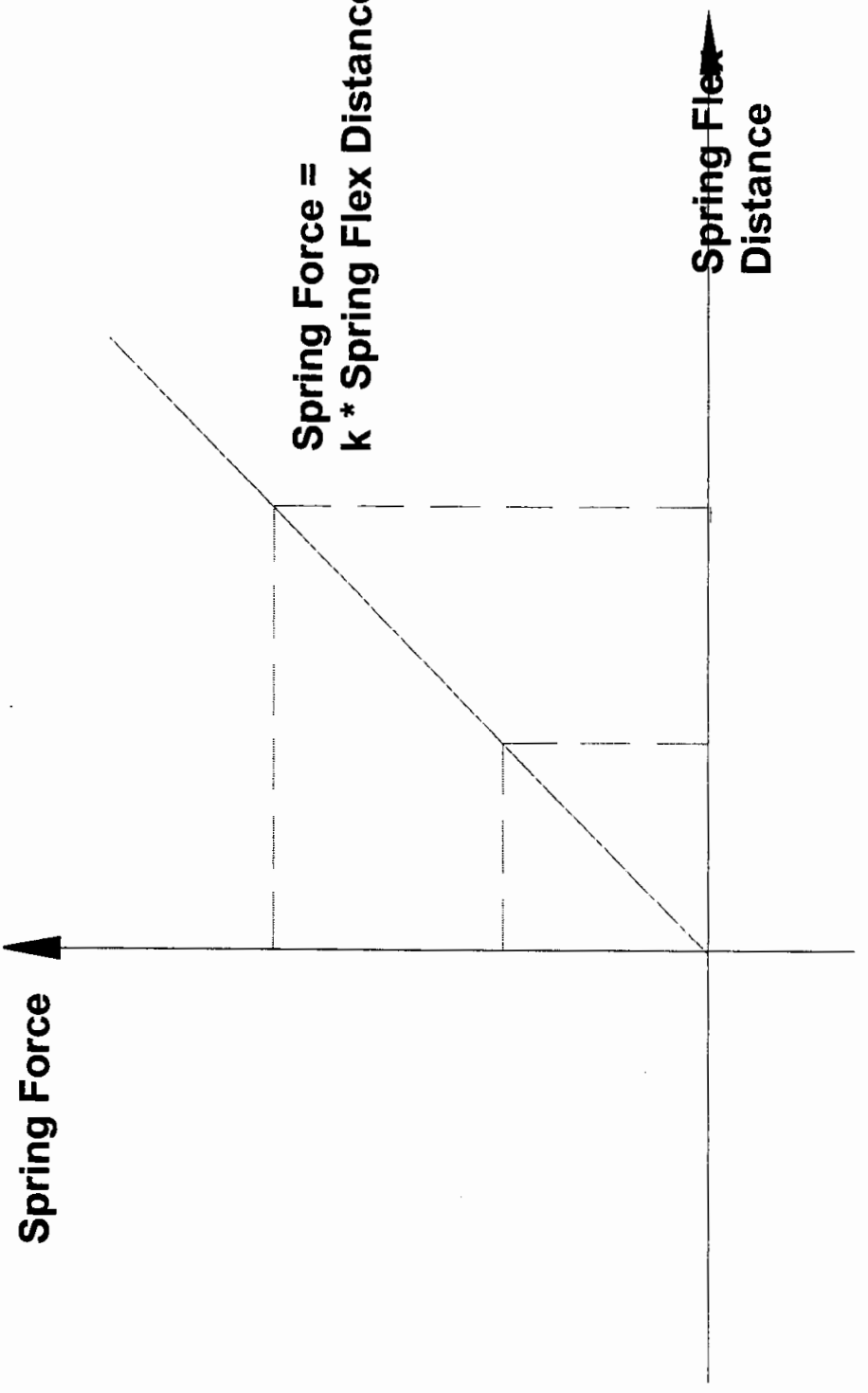
Spring Force
Spring Force =
k * Spring Flex Distance
Spring Flex
Distance

FIG. 5

~~6/7~~

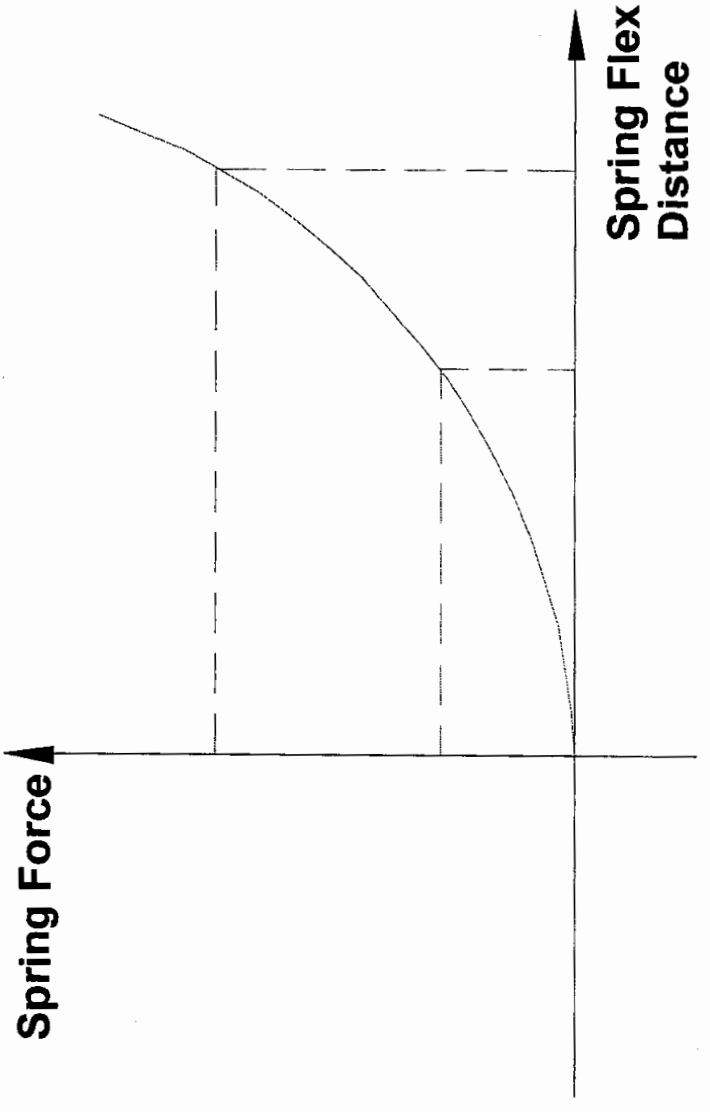

FIG. 6

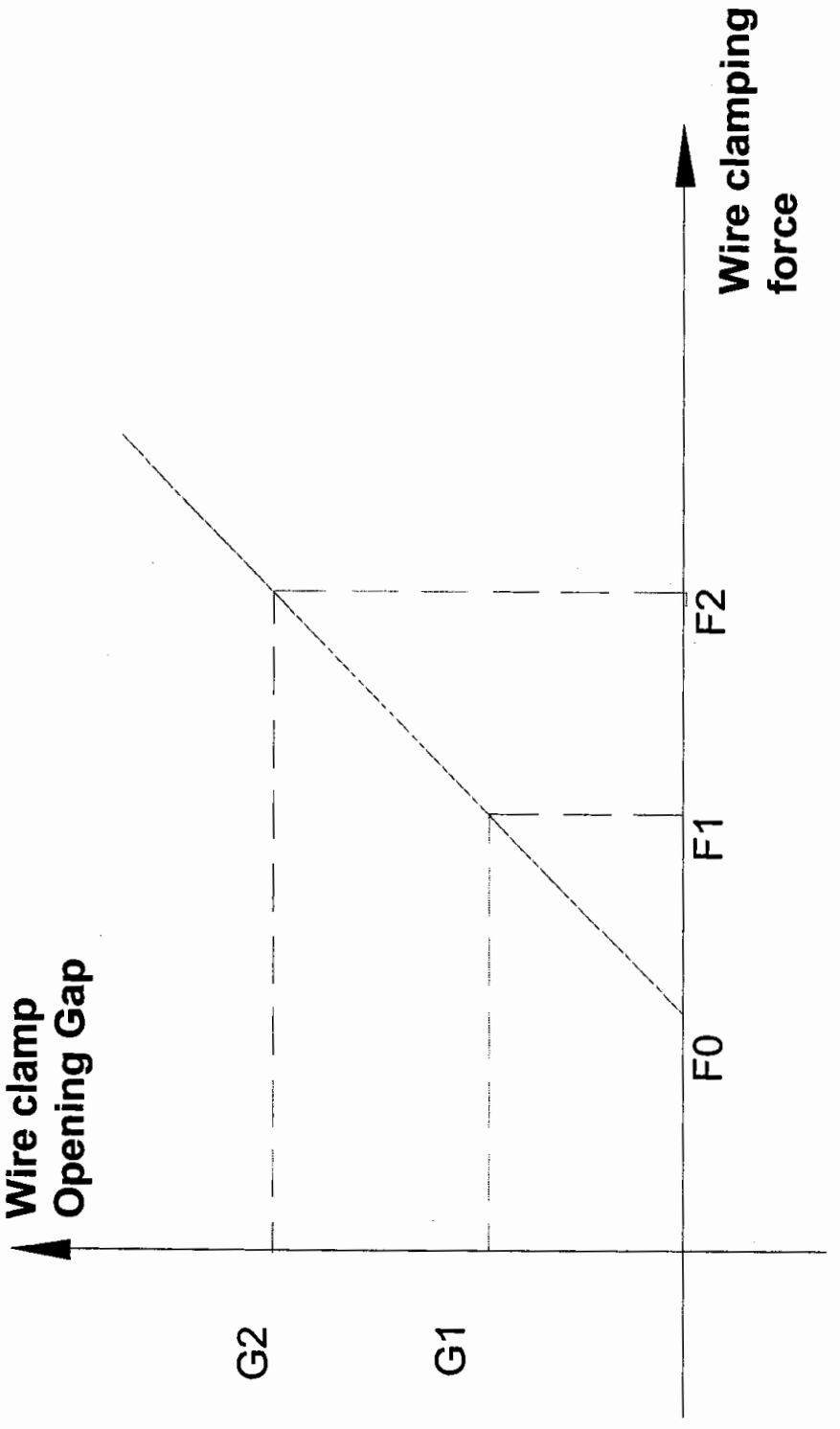

FIG. 7