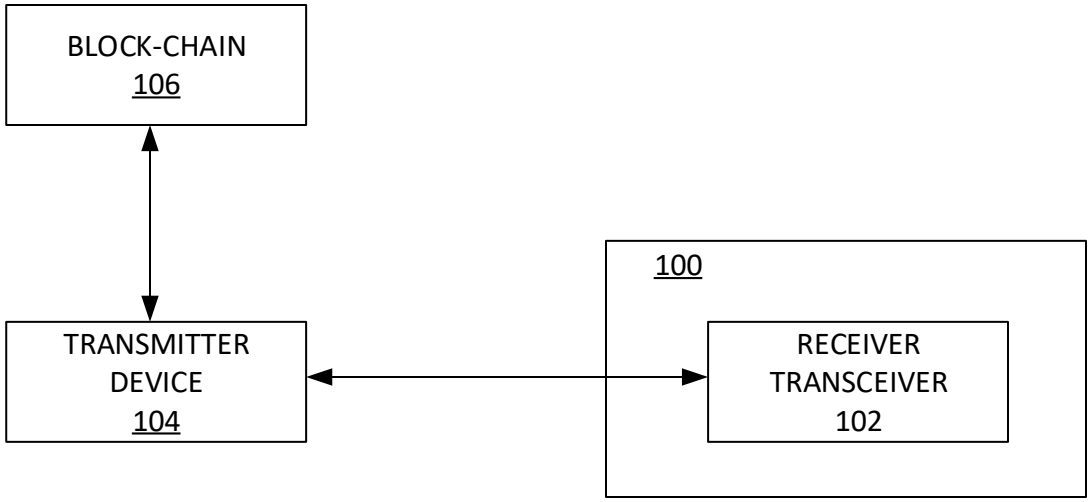
BLOCK-CHAIN
106
100
TRANSMITTER
DEVICE
104
RECEIVER
TRANSCEIVER
102

FIG. 1

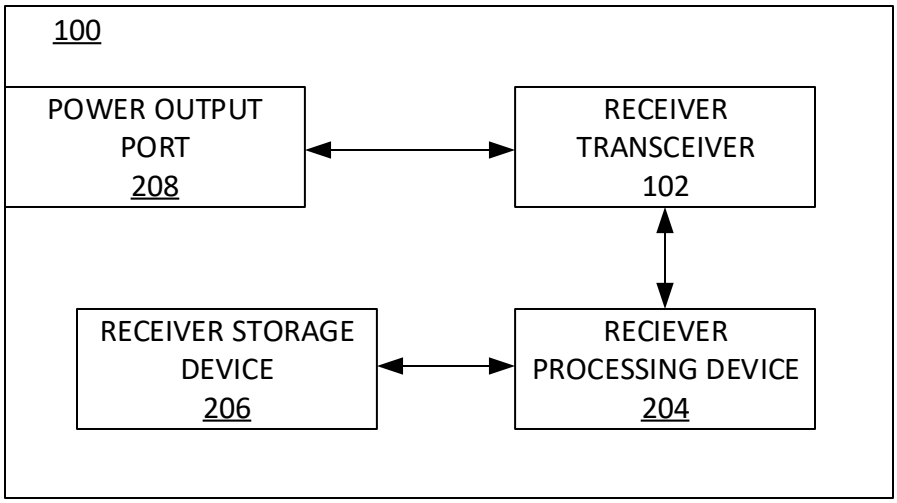
100
POWER OUTPUT PORT
208
RECEIVER TRANSCEIVER
102
RECEIVER STORAGE DEVICE
206
RECIEVER PROCESSING DEVICE
204

FIG. 2

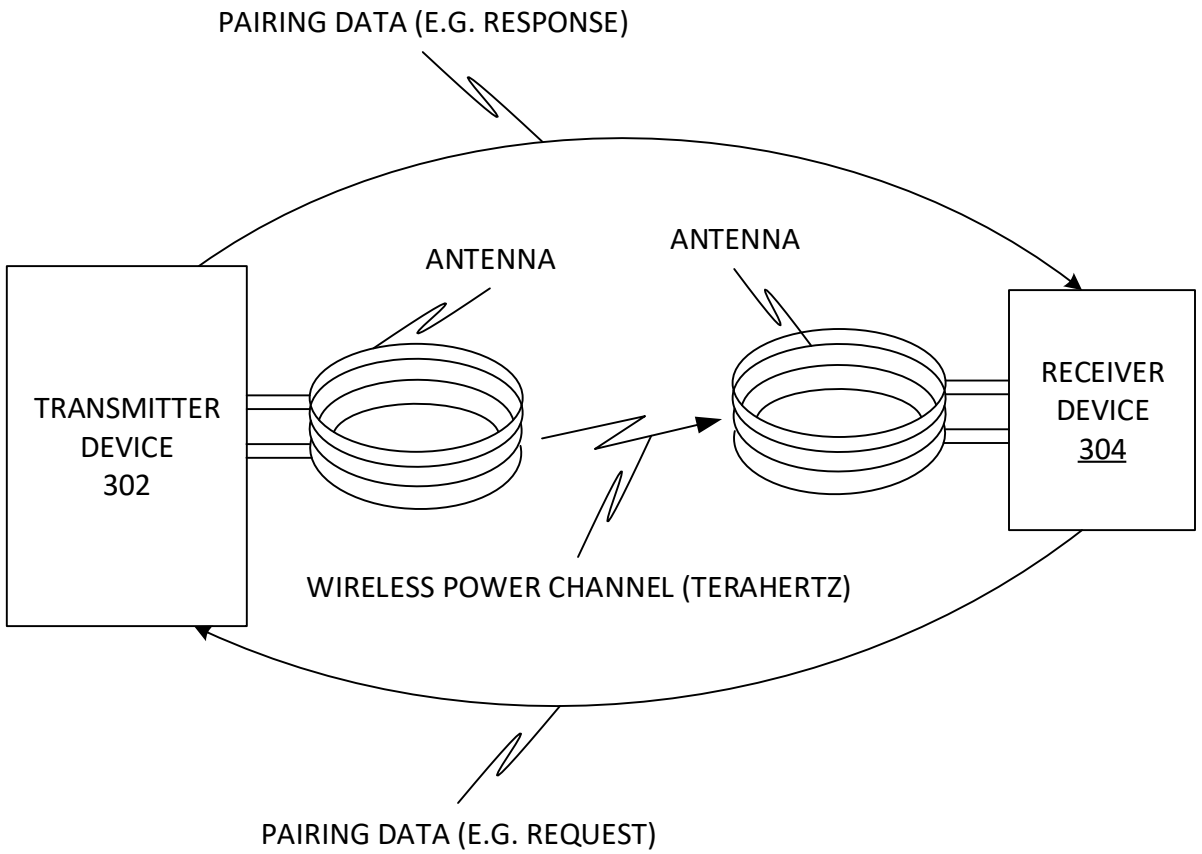
PAIRING DATA (E.G. RESPONSE)
ANTENNA
ANTENNA
TRANSMITTER DEVICE 302
RECEIVER DEVICE 304
WIRELESS POWER CHANNEL (TERAHERTZ)
PAIRING DATA (E.G. REQUEST)

FIG. 3

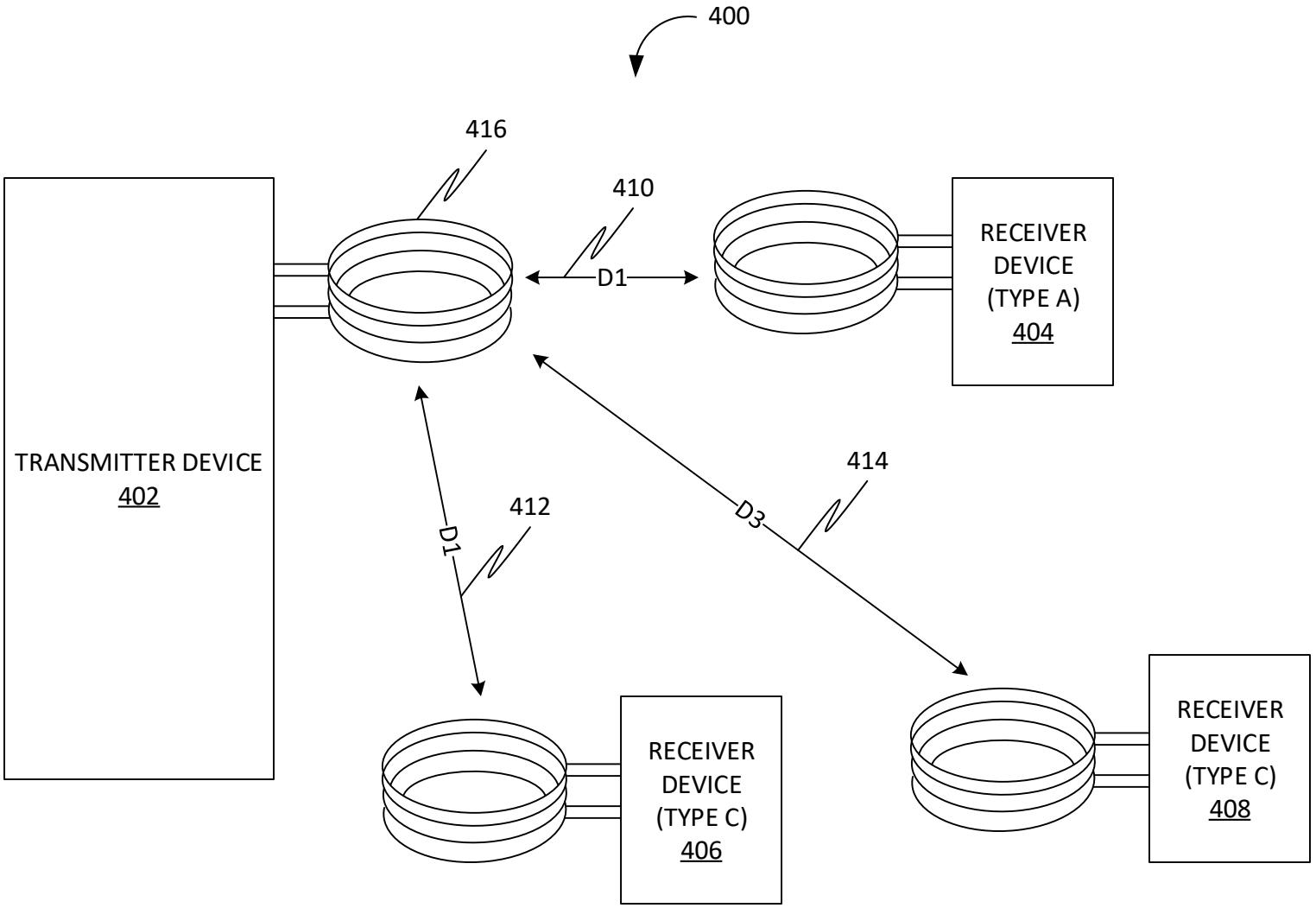
400
416
410
D1
RECEIVER DEVICE (TYPE A) 404
TRANSMITTER DEVICE 402
D1
412
D3
414
RECEIVER DEVICE (TYPE C) 406
RECEIVER DEVICE (TYPE C) 408

FIG. 4

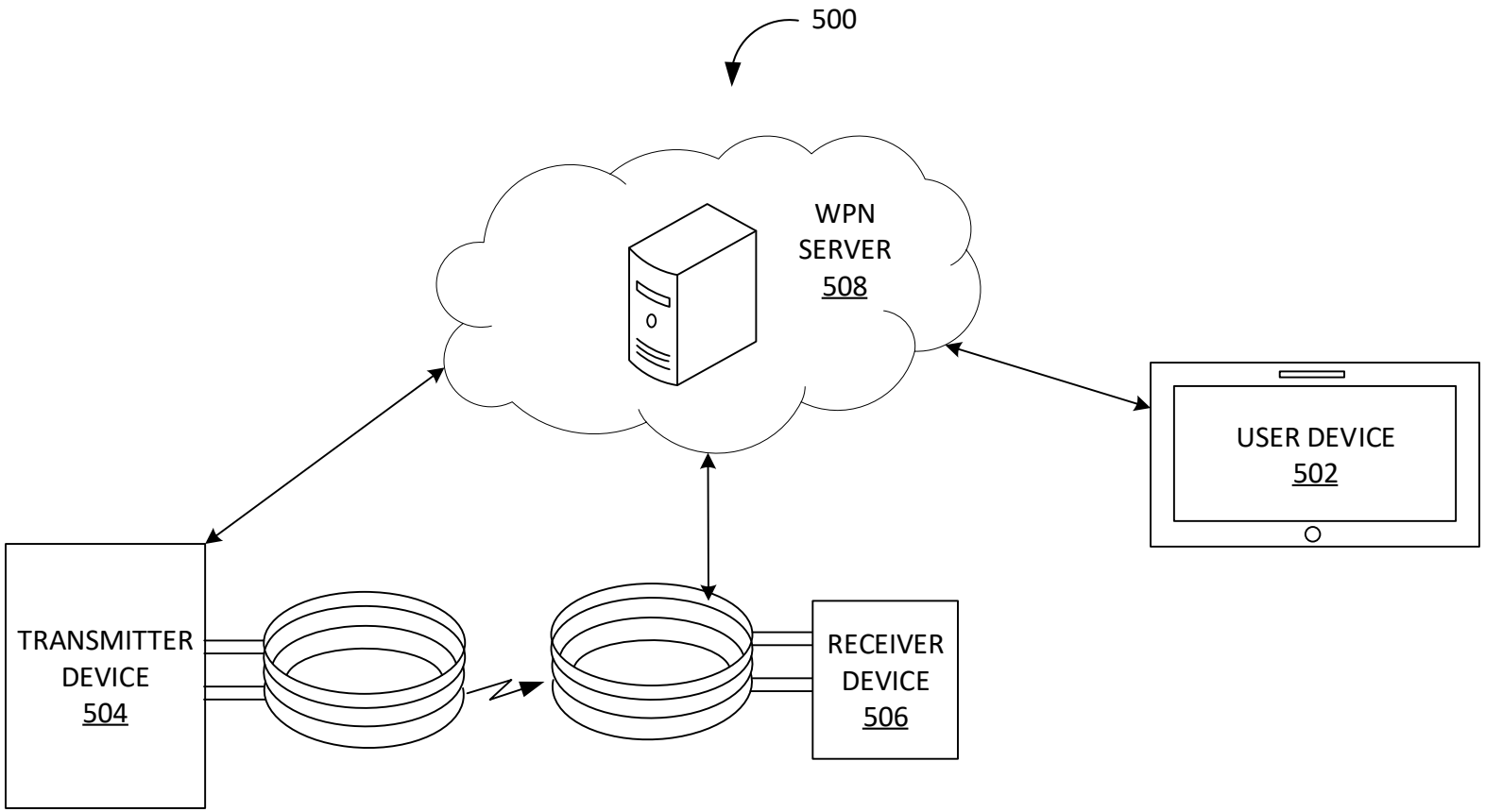
500
WPN
SERVER
508
USER DEVICE
502
TRANSMITTER
DEVICE
504
RECEIVER
DEVICE
506

FIG. 5

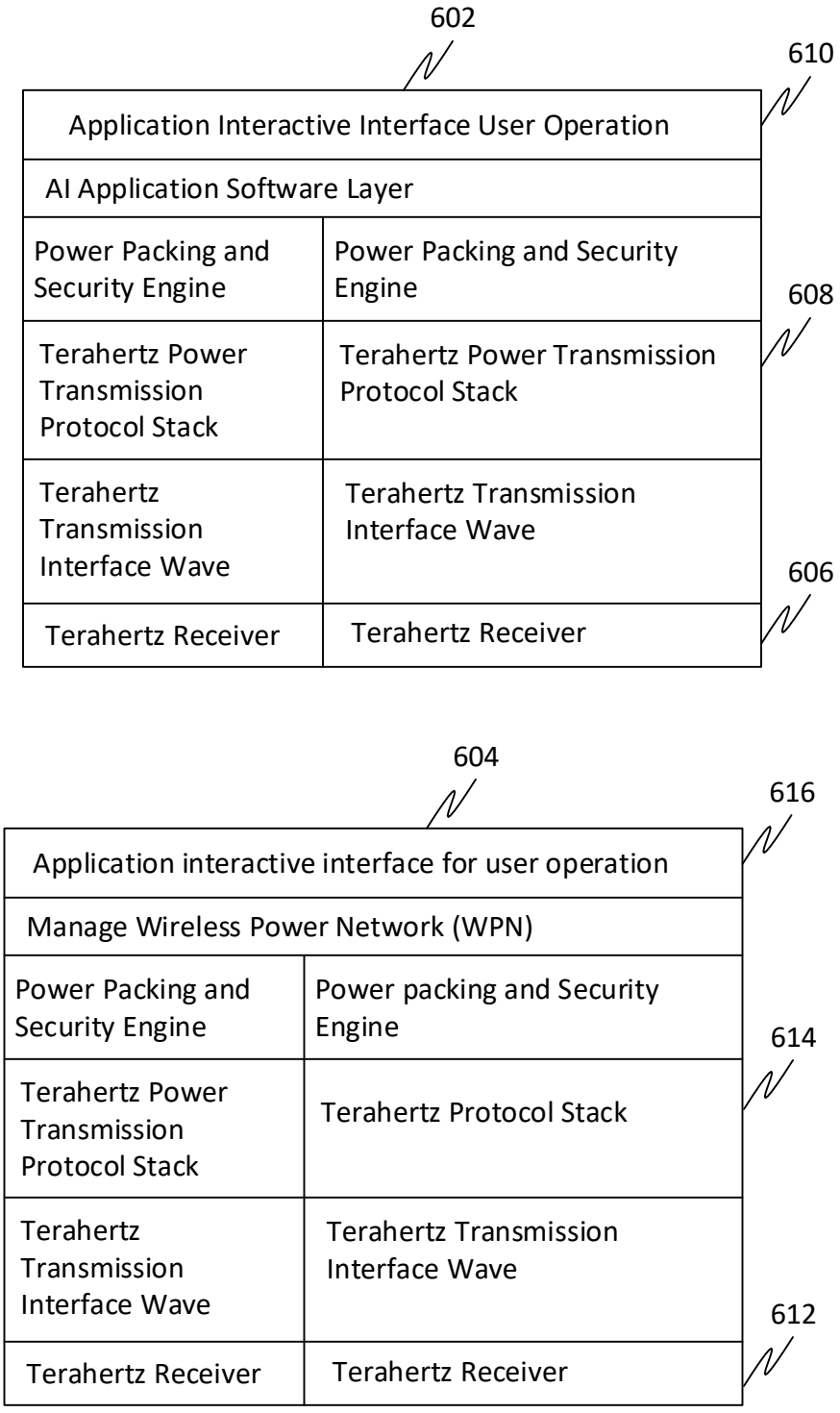
602
610
Application Interactive Interface User Operation
AI Application Software Layer
Power Packing and Security Engine
Power Packing and Security Engine
608
Terahertz Power Transmission Protocol Stack
Terahertz Power Transmission Protocol Stack
Terahertz Transmission Interface Wave
Terahertz Transmission Interface Wave
606
Terahertz Receiver
Terahertz Receiver
604
616
Application interactive interface for user operation
Manage Wireless Power Network (WPN)
Power Packing and Security Engine
Power packing and Security Engine
614
Terahertz Power Transmission Protocol Stack
Terahertz Protocol Stack
Terahertz Transmission Interface Wave
Terahertz Transmission Interface Wave
612
Terahertz Receiver
Terahertz Receiver

FIG. 6

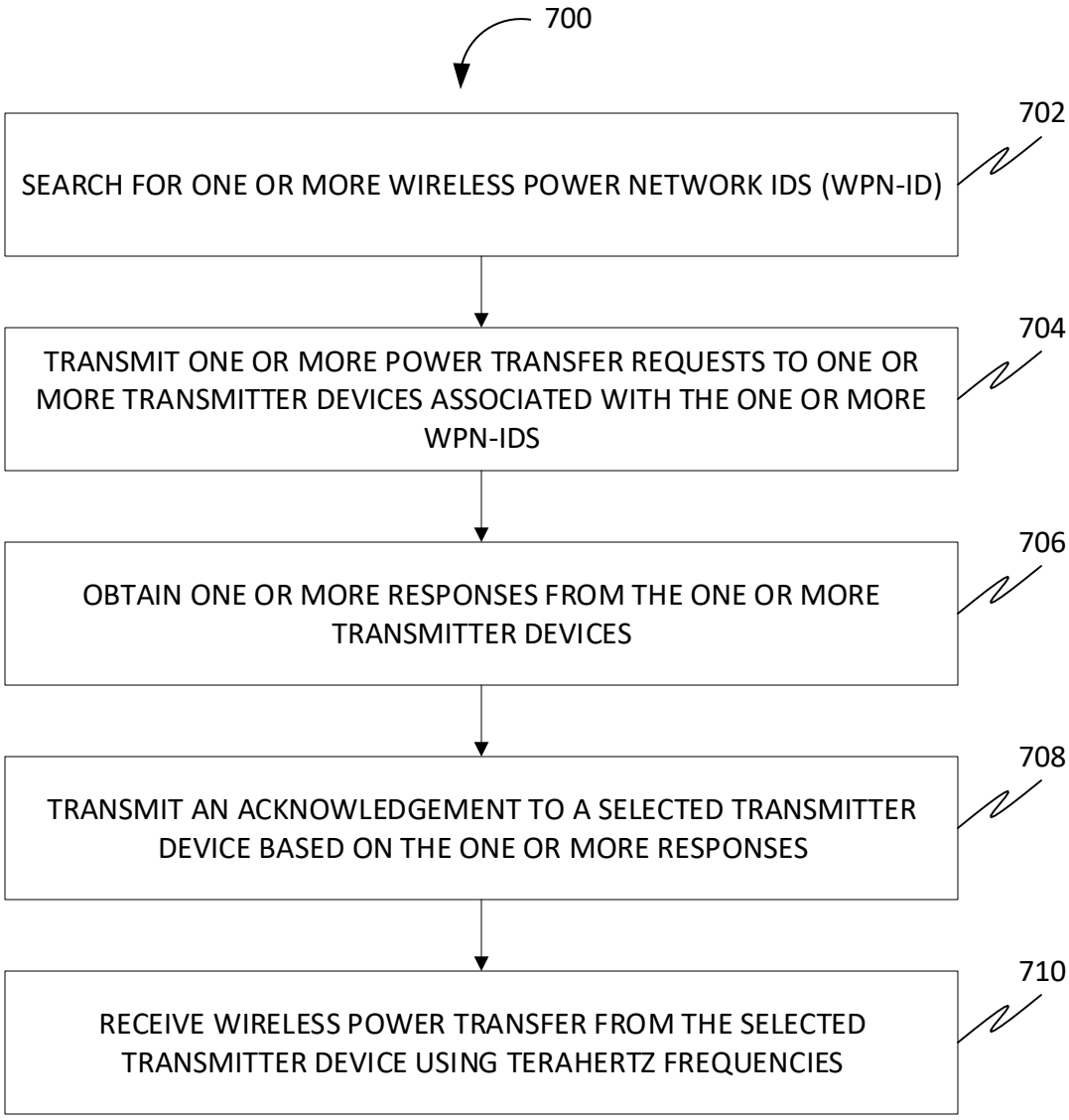
700
SEARCH FOR ONE OR MORE WIRELESS POWER NETWORK IDS (WPN-ID)
702
TRANSMIT ONE OR MORE POWER TRANSFER REQUESTS TO ONE OR MORE TRANSMITTER DEVICES ASSOCIATED WITH THE ONE OR MORE WPN-IDS
704
OBTAIN ONE OR MORE RESPONSES FROM THE ONE OR MORE TRANSMITTER DEVICES
706
TRANSMIT AN ACKNOWLEDGEMENT TO A SELECTED TRANSMITTER DEVICE BASED ON THE ONE OR MORE RESPONSES
708
RECEIVE WIRELESS POWER TRANSFER FROM THE SELECTED TRANSMITTER DEVICE USING TERAHERTZ FREQUENCIES
710

FIG. 7

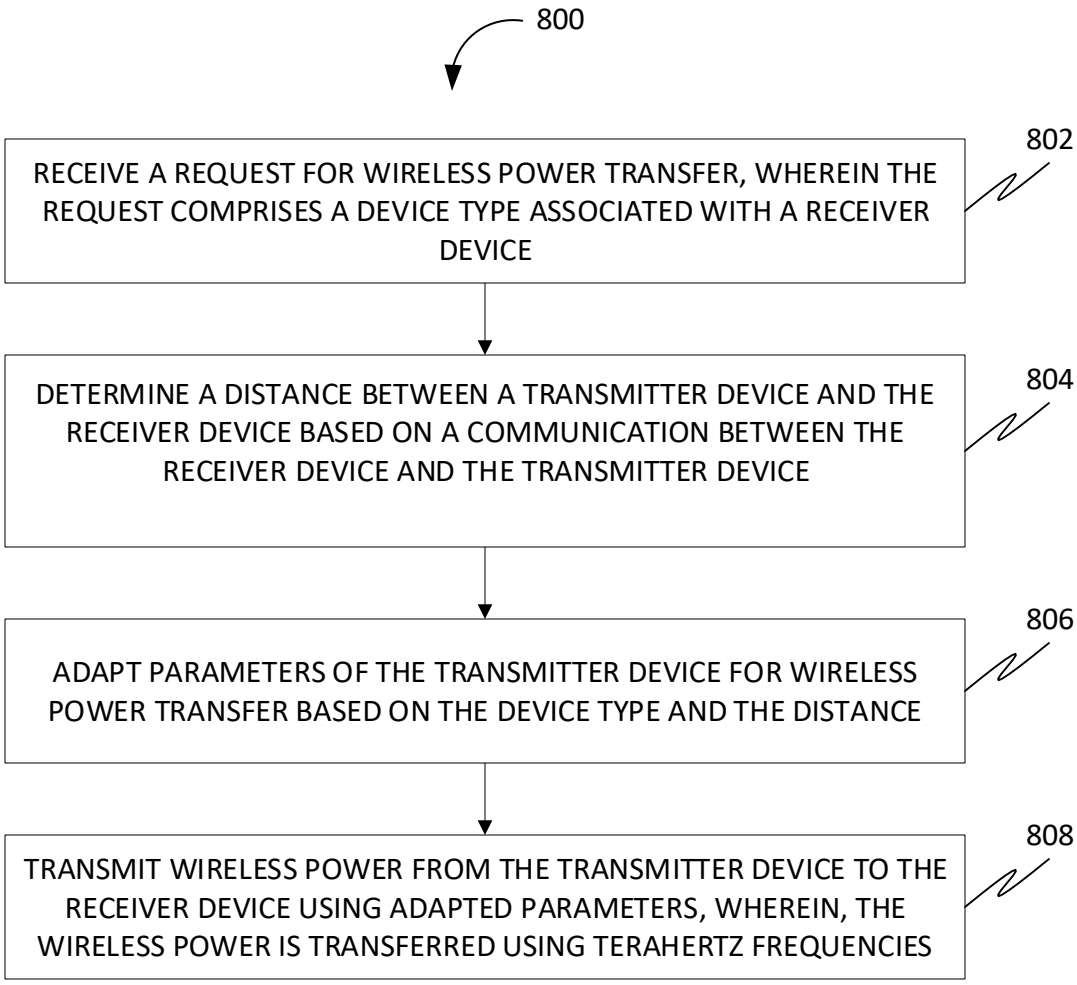
800
RECEIVE A REQUEST FOR WIRELESS POWER TRANSFER, WHEREIN THE REQUEST COMPRISES A DEVICE TYPE ASSOCIATED WITH A RECEIVER DEVICE
802
DETERMINE A DISTANCE BETWEEN A TRANSMITTER DEVICE AND THE RECEIVER DEVICE BASED ON A COMMUNICATION BETWEEN THE RECEIVER DEVICE AND THE TRANSMITTER DEVICE
804
ADAPT PARAMETERS OF THE TRANSMITTER DEVICE FOR WIRELESS POWER TRANSFER BASED ON THE DEVICE TYPE AND THE DISTANCE
806
TRANSMIT WIRELESS POWER FROM THE TRANSMITTER DEVICE TO THE RECEIVER DEVICE USING ADAPTED PARAMETERS, WHEREIN, THE WIRELESS POWER IS TRANSFERRED USING TERAHERTZ FREQUENCIES
808

FIG. 8

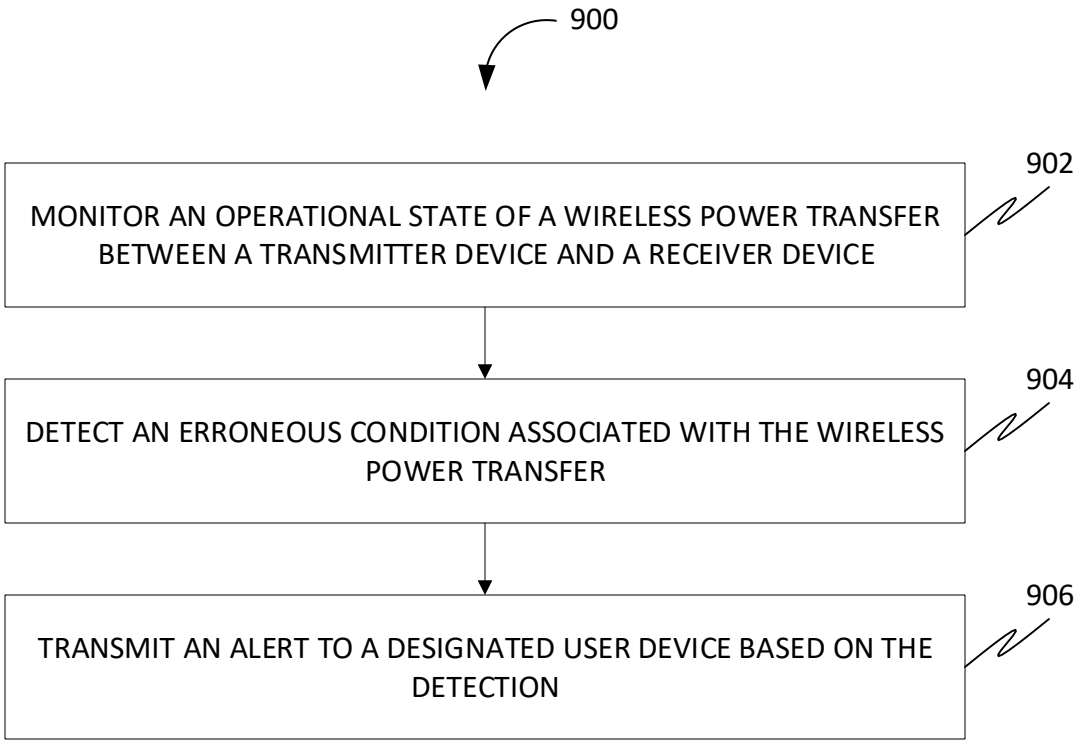
900
902
MONITOR AN OPERATIONAL STATE OF A WIRELESS POWER TRANSFER BETWEEN A TRANSMITTER DEVICE AND A RECEIVER DEVICE
904
DETECT AN ERRONEOUS CONDITION ASSOCIATED WITH THE WIRELESS POWER TRANSFER
906
TRANSMIT AN ALERT TO A DESIGNATED USER DEVICE BASED ON THE DETECTION

FIG. 9

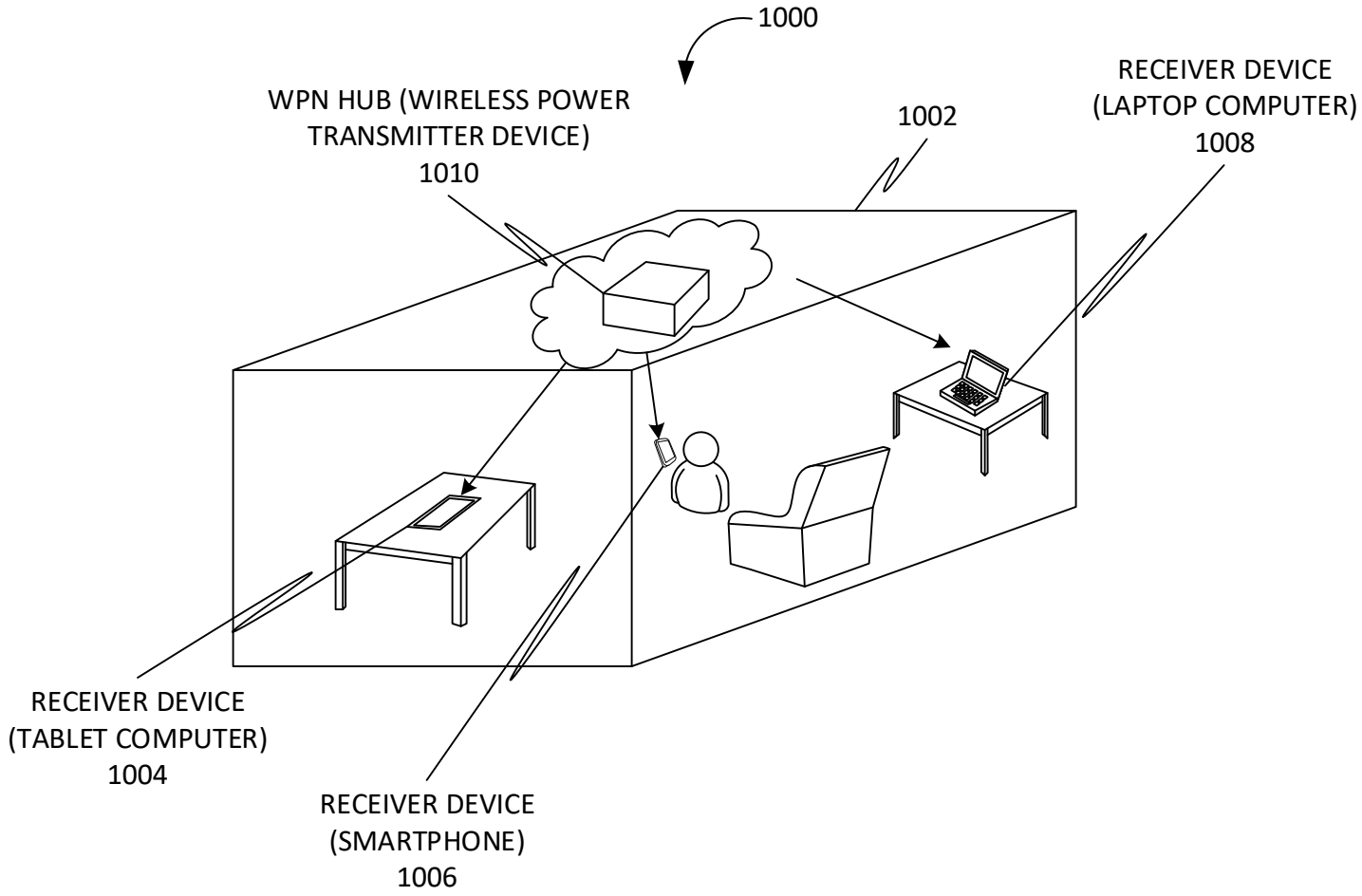
1000
WPN HUB (WIRELESS POWER TRANSMITTER DEVICE)
1010
1002
RECEIVER DEVICE (LAPTOP COMPUTER)
1008
RECEIVER DEVICE (TABLET COMPUTER)
1004
RECEIVER DEVICE (SMARTPHONE)
1006

FIG. 10

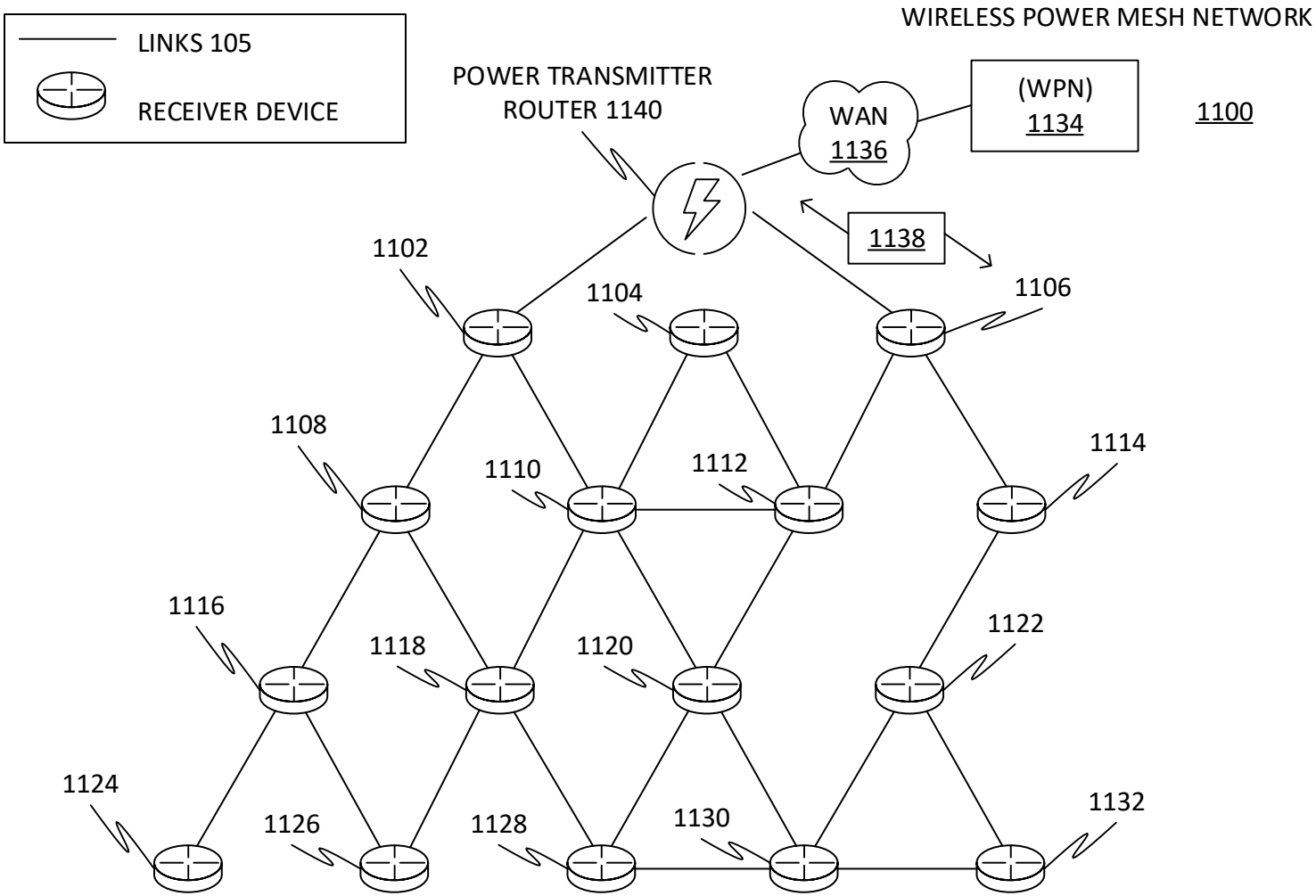
LINKS 105
RECEIVER DEVICE
WIRELESS POWER MESH NETWORK
POWER TRANSMITTER
ROUTER 1140
WAN
1136
(WPN)
1134
1100
1138
1102
1104
1106
1108
1110
1112
1114
1116
1118
1120
1122
1124
1126
1128
1130
1132

FIG. 11

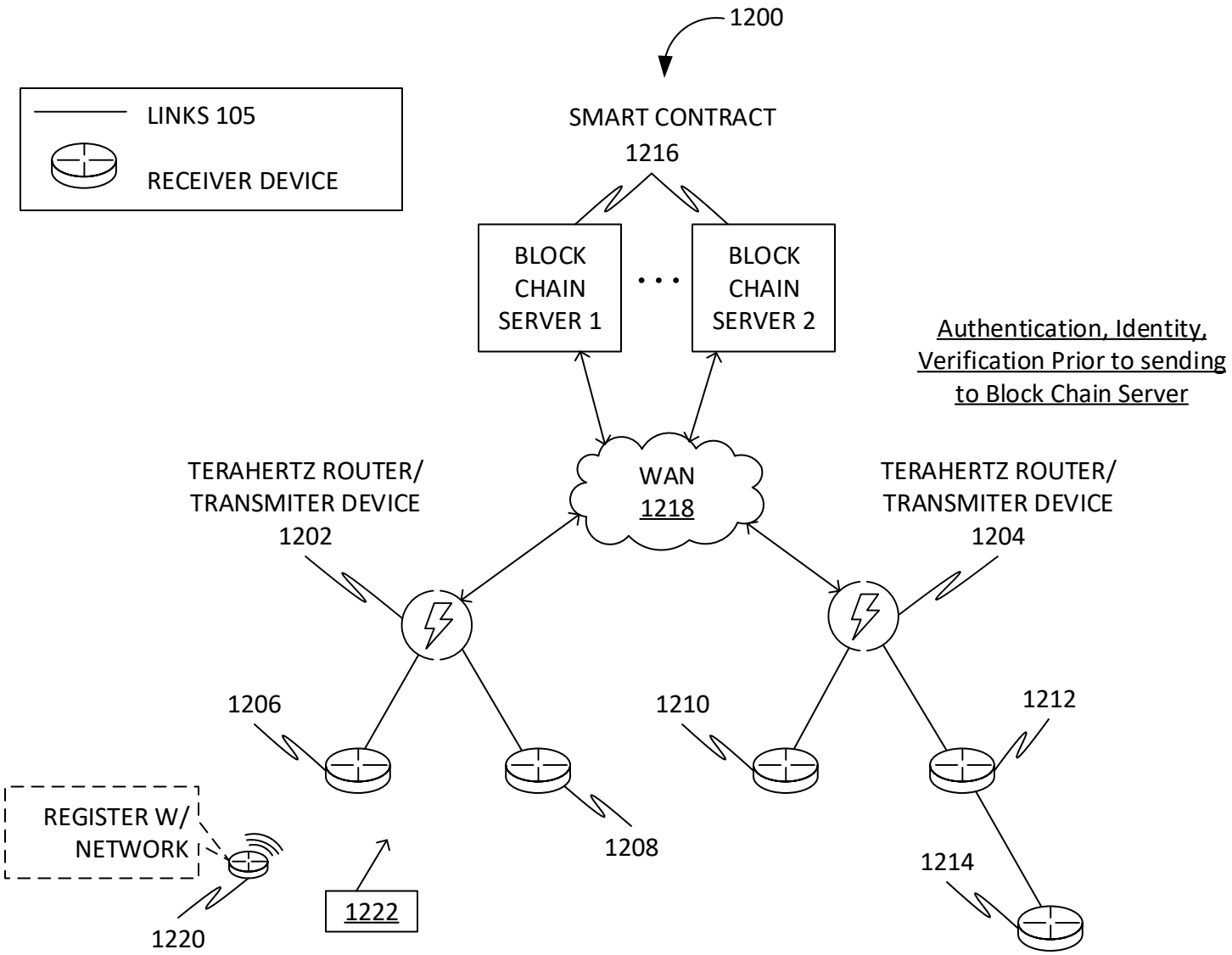
1200
LINKS 105
RECEIVER DEVICE
SMART CONTRACT
1216
BLOCK CHAIN SERVER 1
BLOCK CHAIN SERVER 2
Authentication, Identity, Verification Prior to sending to Block Chain Server
WAN
1218
TERAHERTZ ROUTER/ TRANSMITER DEVICE
1202
TERAHERTZ ROUTER/ TRANSMITER DEVICE
1204
1206
1208
1210
1212
1214
REGISTER W/ NETWORK
1220
1222

FIG. 12A

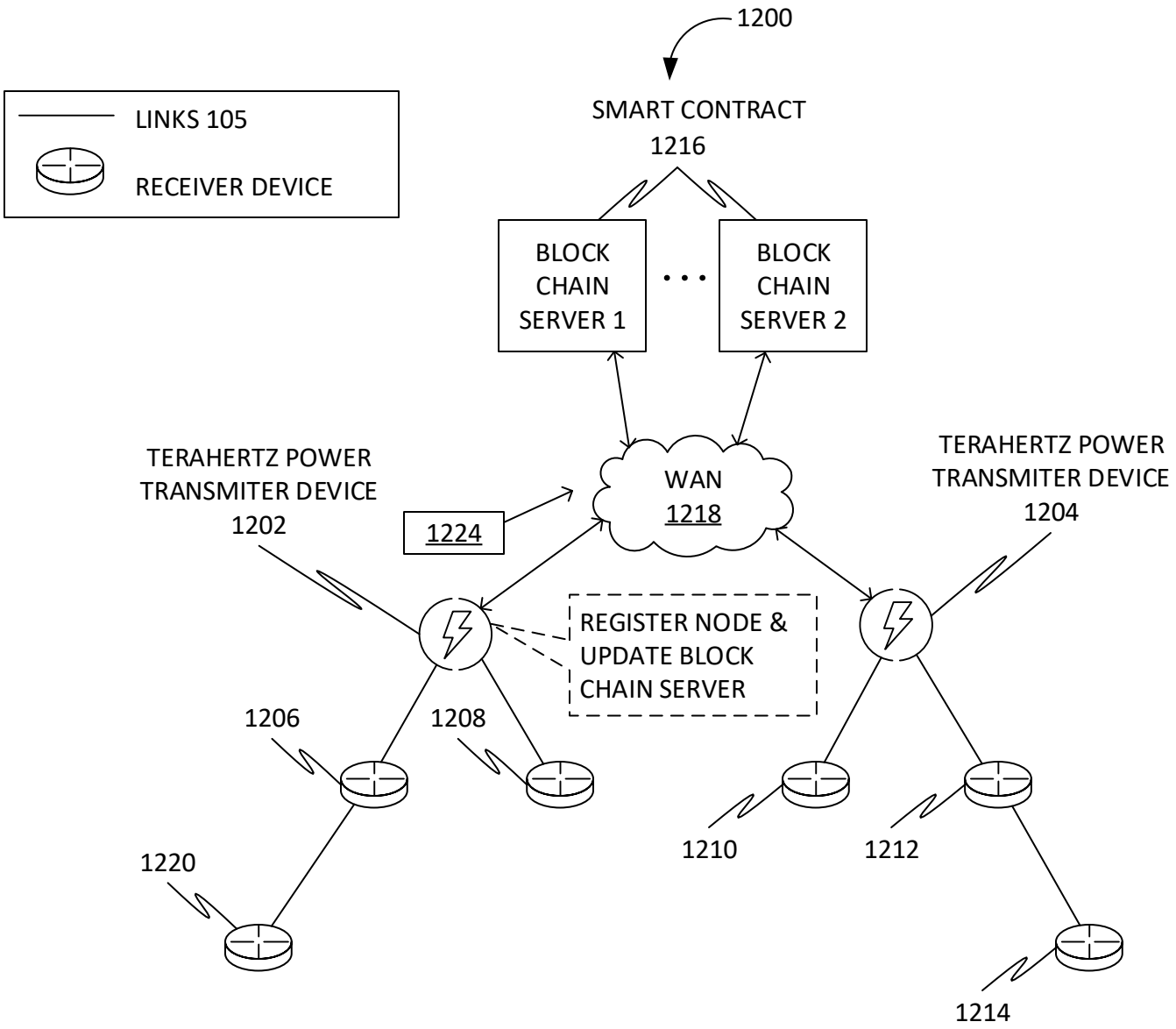
1200
SMART CONTRACT
1216
LINKS 105
RECEIVER DEVICE
BLOCK CHAIN SERVER 1
BLOCK CHAIN SERVER 2
WAN
1218
1224
TERAHERTZ POWER TRANSMITER DEVICE
1202
TERAHERTZ POWER TRANSMITER DEVICE
1204
REGISTER NODE & UPDATE BLOCK CHAIN SERVER
1206
1208
1210
1212
1214
1220

FIG. 12B

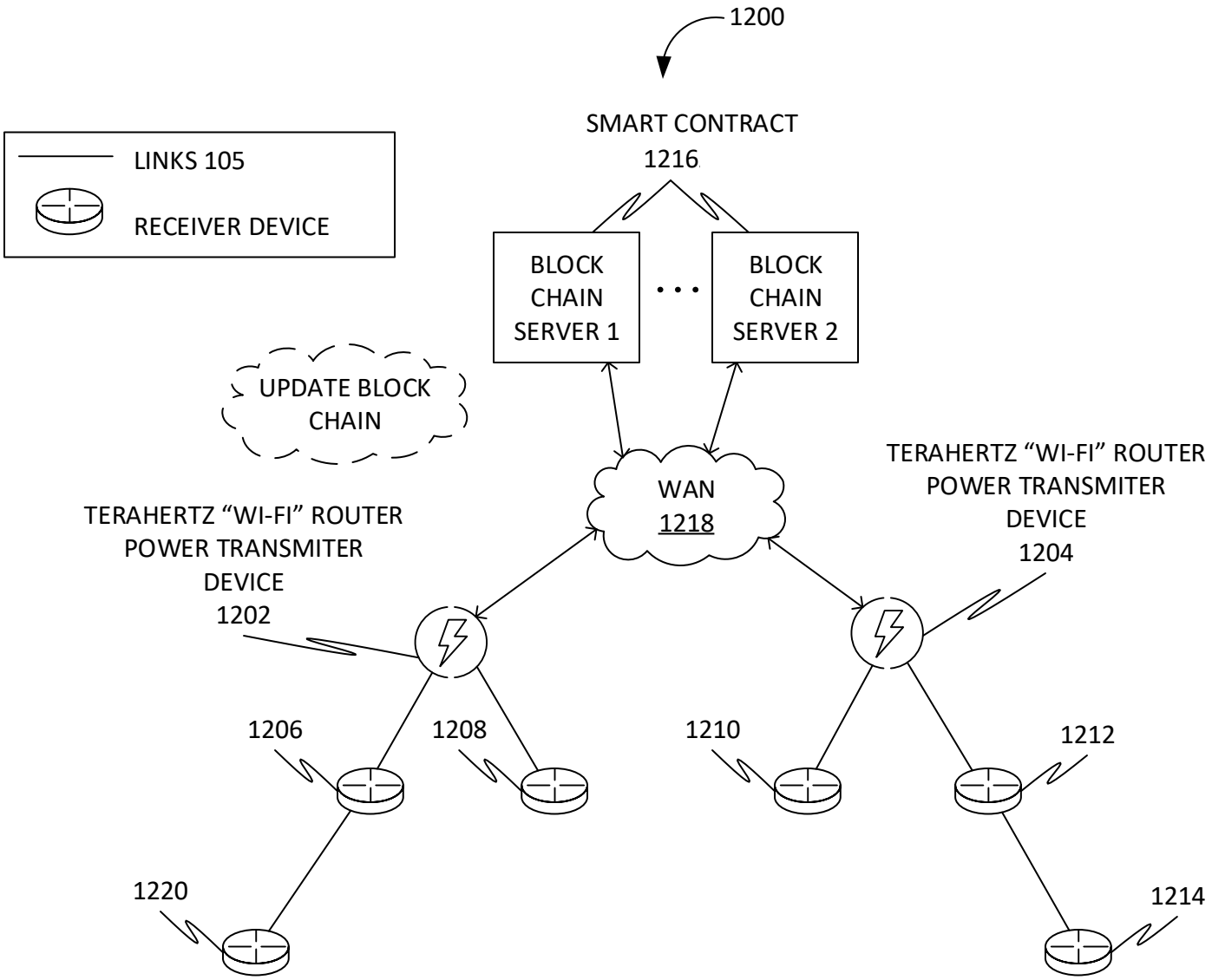
1200
SMART CONTRACT
1216
LINKS 105
RECEIVER DEVICE
BLOCK CHAIN SERVER 1
BLOCK CHAIN SERVER 2
UPDATE BLOCK CHAIN
WAN
1218
TERAHERTZ "WI-FI" ROUTER POWER TRANSMITER DEVICE
1202
TERAHERTZ "WI-FI" ROUTER POWER TRANSMITER DEVICE
1204
1206
1208
1210
1212
1214
1220

FIG. 12C

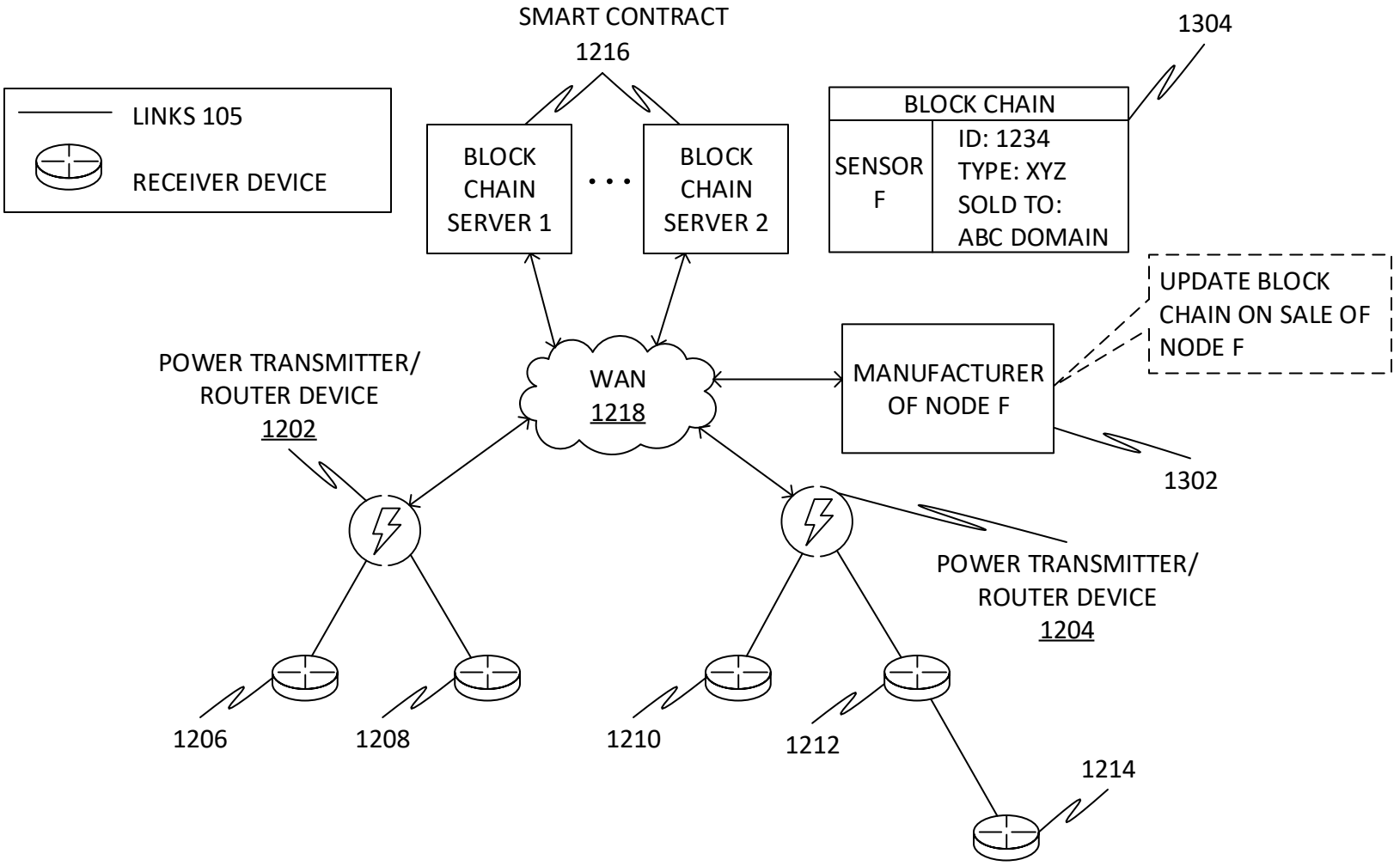
SMART CONTRACT
1216
1304
LINKS 105
RECEIVER DEVICE
BLOCK CHAIN SERVER 1
BLOCK CHAIN SERVER 2
BLOCK CHAIN
SENSOR F
ID: 1234
TYPE: XYZ
SOLD TO:
ABC DOMAIN
UPDATE BLOCK CHAIN ON SALE OF NODE F
POWER TRANSMITTER/ ROUTER DEVICE
1202
WAN
1218
MANUFACTURER OF NODE F
1302
POWER TRANSMITTER/ ROUTER DEVICE
1204
1206
1208
1210
1212
1214

FIG. 13A

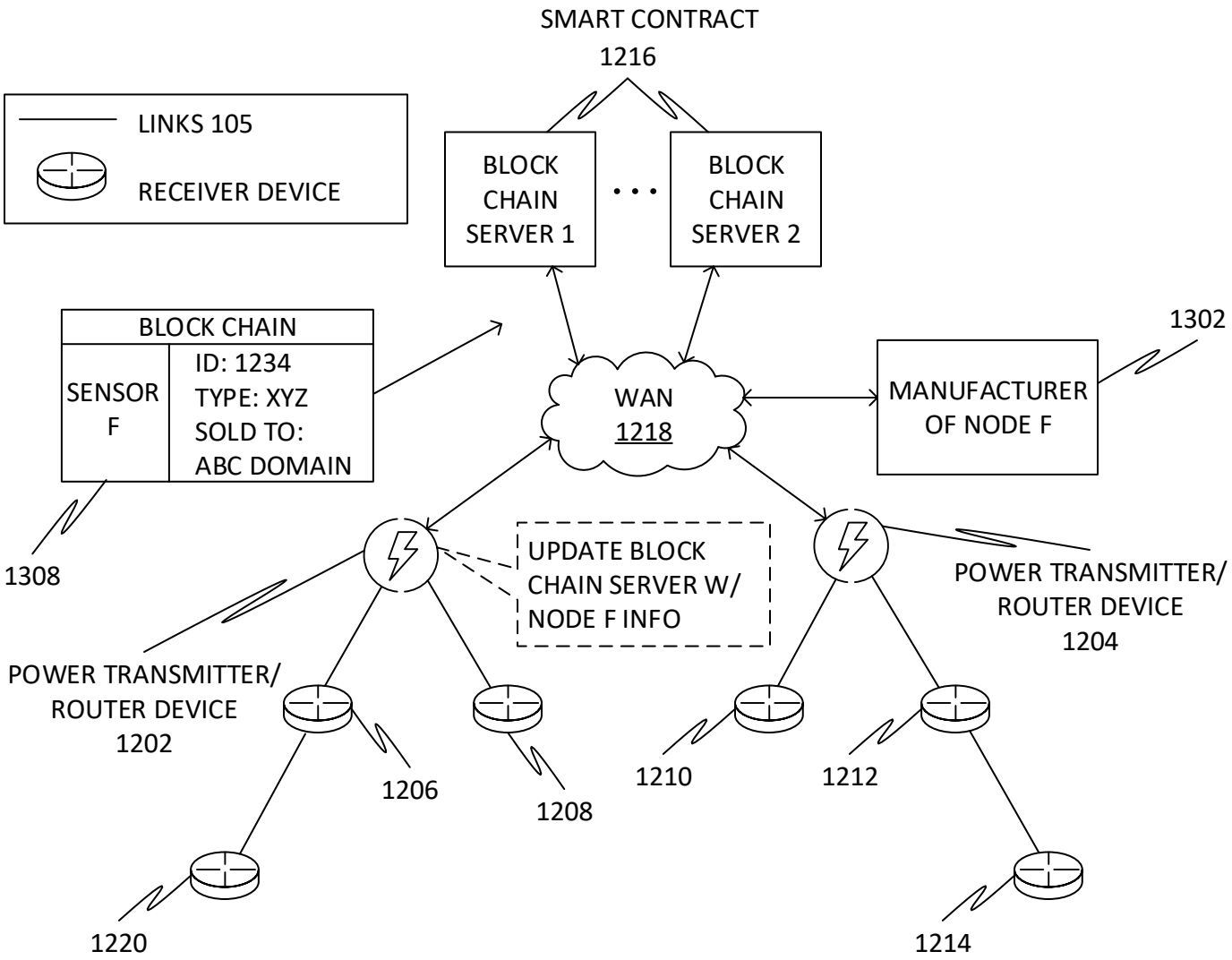
SMART CONTRACT
1216
LINKS 105
RECEIVER DEVICE
BLOCK CHAIN SERVER 1
BLOCK CHAIN SERVER 2
BLOCK CHAIN
SENSOR F
ID: 1234
TYPE: XYZ
SOLD TO: ABC DOMAIN
1308
WAN
1218
1302
MANUFACTURER OF NODE F
UPDATE BLOCK CHAIN SERVER W/ NODE F INFO
POWER TRANSMITTER/ ROUTER DEVICE 1202
POWER TRANSMITTER/ ROUTER DEVICE 1204
1206
1208
1210
1212
1220
1214

FIG. 13B

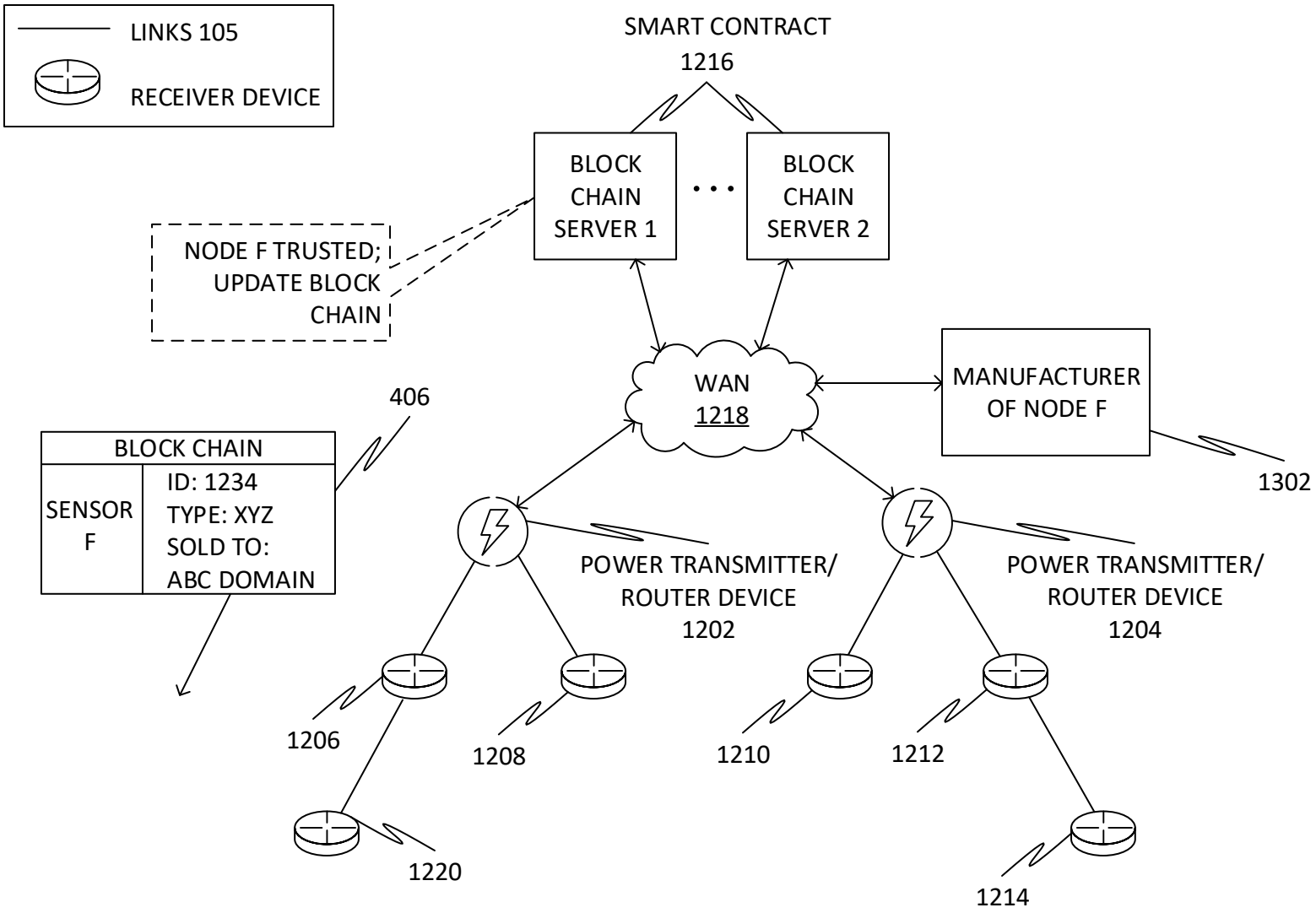
LINKS 105
RECEIVER DEVICE
SMART CONTRACT
1216
BLOCK CHAIN SERVER 1
BLOCK CHAIN SERVER 2
NODE F TRUSTED; UPDATE BLOCK CHAIN
WAN
1218
MANUFACTURER OF NODE F
1302
406
BLOCK CHAIN
SENSOR F
ID: 1234
TYPE: XYZ
SOLD TO: ABC DOMAIN
POWER TRANSMITTER/ ROUTER DEVICE 1202
POWER TRANSMITTER/ ROUTER DEVICE 1204
1206
1208
1210
1212
1214
1220

FIG. 13C

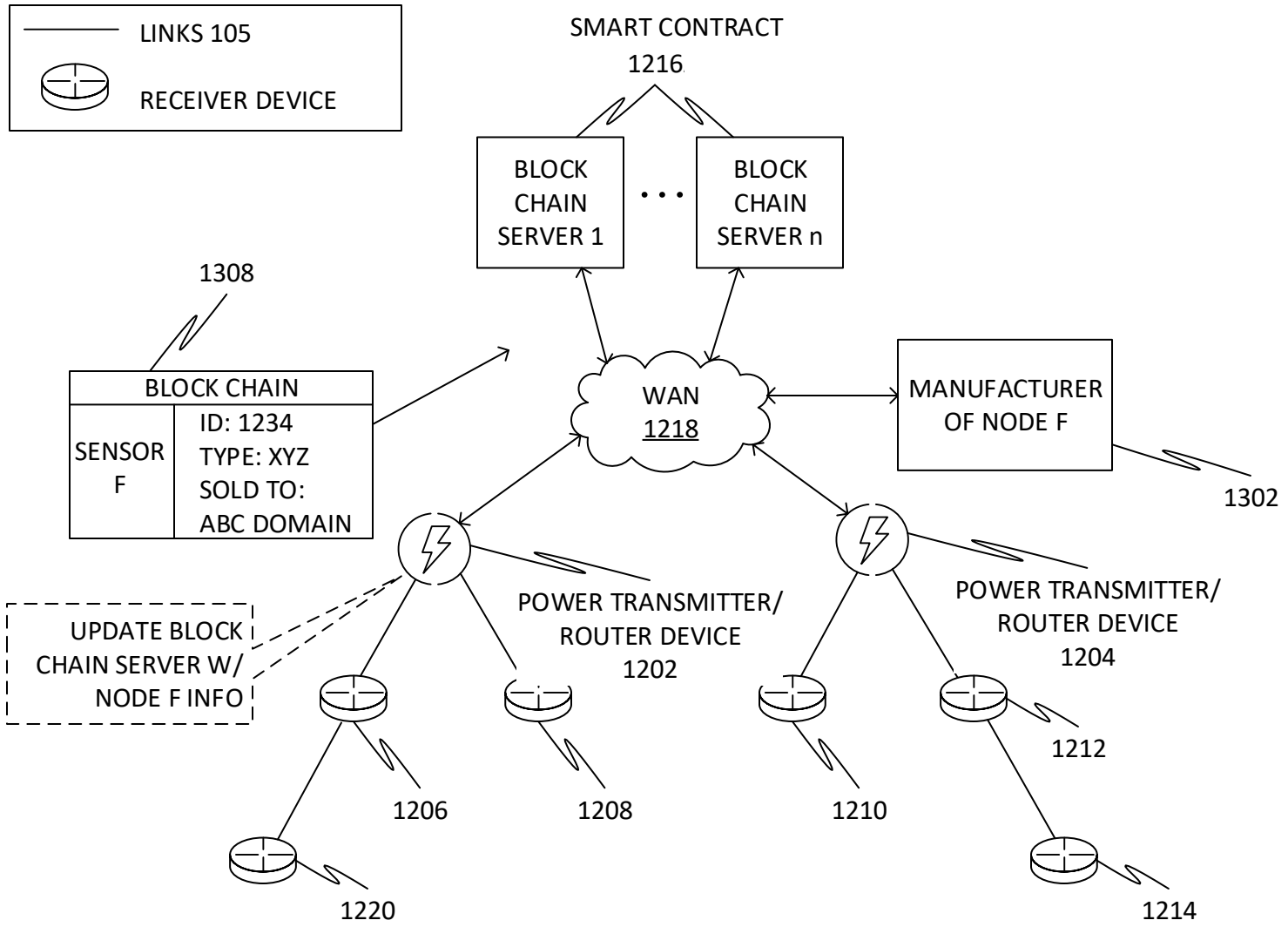
LINKS 105
RECEIVER DEVICE
SMART CONTRACT
1216
BLOCK CHAIN SERVER 1
BLOCK CHAIN SERVER n
1308
BLOCK CHAIN
SENSOR F
ID: 1234
TYPE: XYZ
SOLD TO: ABC DOMAIN
WAN
1218
MANUFACTURER OF NODE F
1302
UPDATE BLOCK CHAIN SERVER W/ NODE F INFO
POWER TRANSMITTER/ ROUTER DEVICE 1202
POWER TRANSMITTER/ ROUTER DEVICE 1204
1206
1208
1210
1212
1214
1220

FIG. 13D

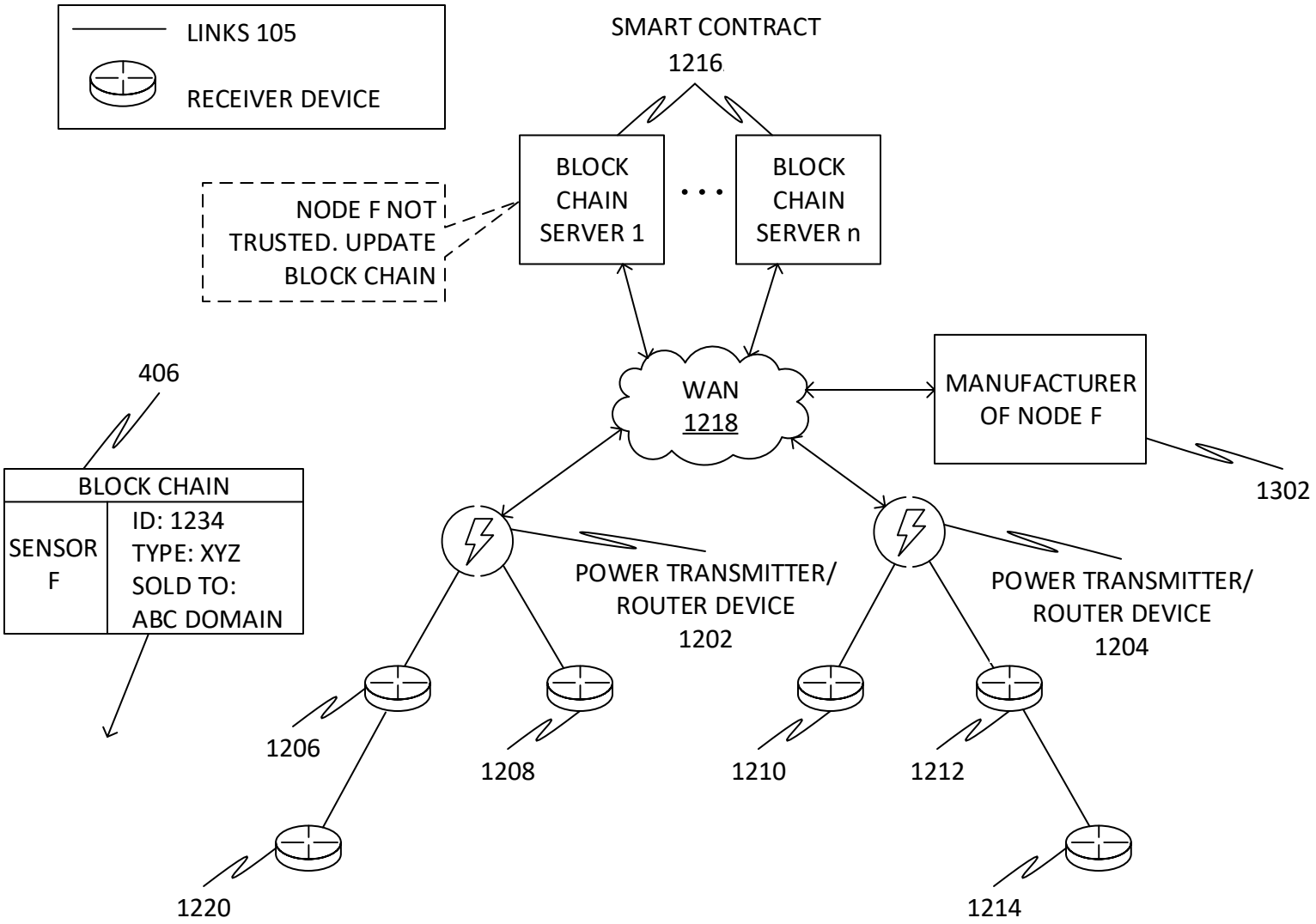
LINKS 105
RECEIVER DEVICE
SMART CONTRACT
1216
BLOCK CHAIN SERVER 1
BLOCK CHAIN SERVER n
NODE F NOT TRUSTED. UPDATE BLOCK CHAIN
406
BLOCK CHAIN
SENSOR F
ID: 1234
TYPE: XYZ
SOLD TO: ABC DOMAIN
WAN
1218
MANUFACTURER OF NODE F
1302
POWER TRANSMITTER/ ROUTER DEVICE
1202
POWER TRANSMITTER/ ROUTER DEVICE
1204
1206
1208
1210
1212
1214
1220

FIG. 13E

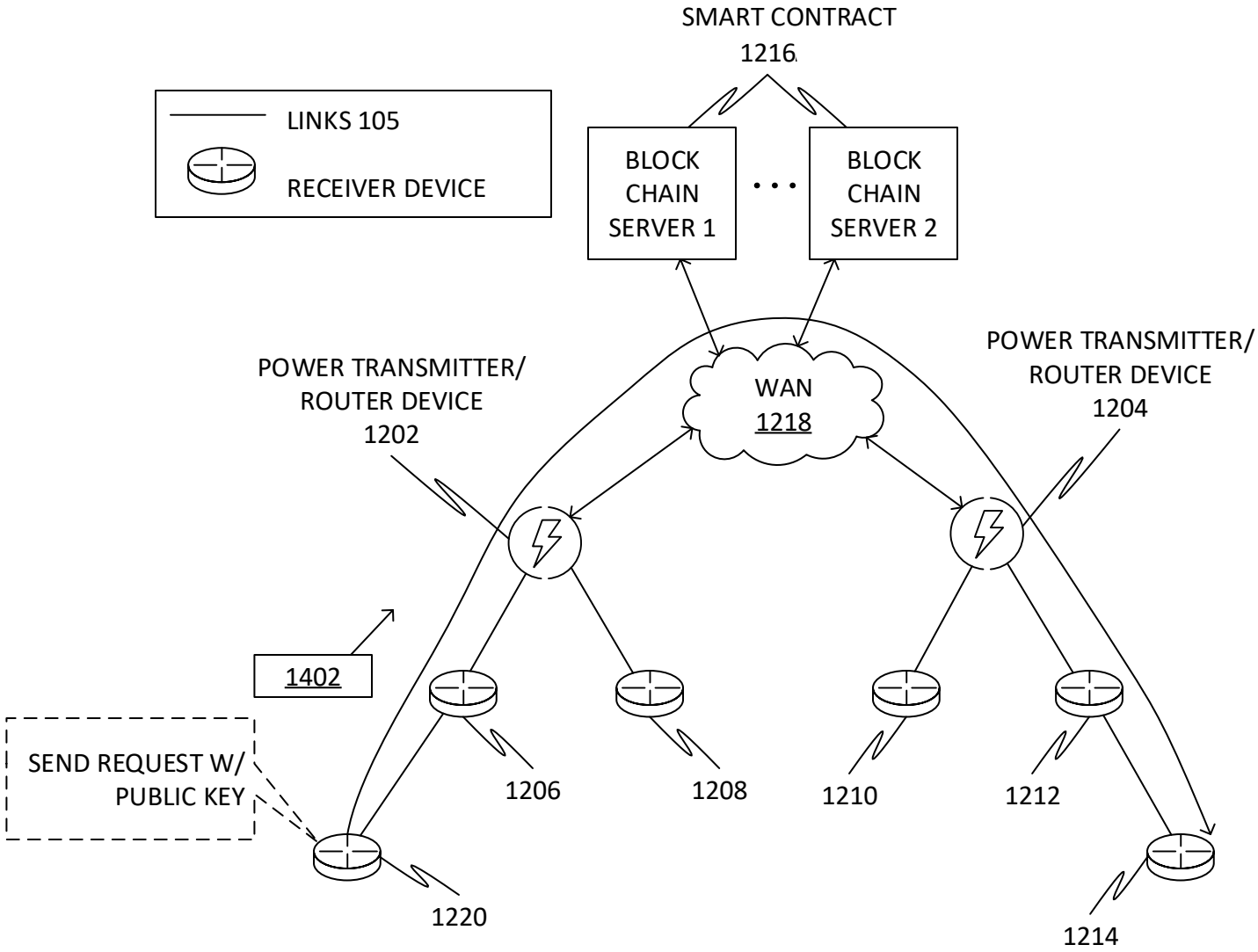
SMART CONTRACT
1216
LINKS 105
RECEIVER DEVICE
BLOCK CHAIN SERVER 1
BLOCK CHAIN SERVER 2
POWER TRANSMITTER/ ROUTER DEVICE 1202
WAN 1218
POWER TRANSMITTER/ ROUTER DEVICE 1204
1402
SEND REQUEST W/ PUBLIC KEY
1206
1208
1210
1212
1214
1220

FIG. 14A

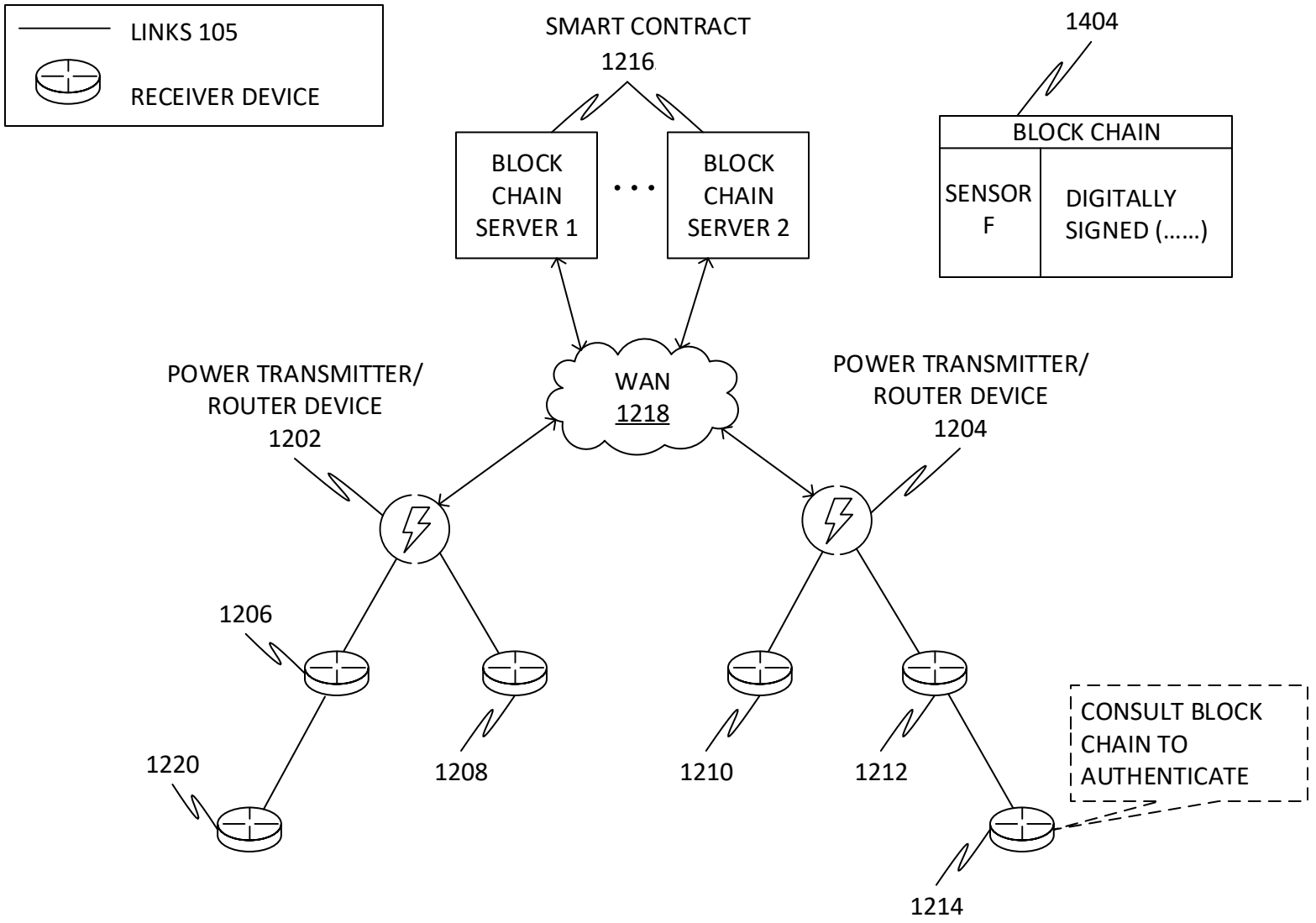
LINKS 105
RECEIVER DEVICE
SMART CONTRACT
1216
1404
BLOCK CHAIN
SENSOR F
DIGITALLY SIGNED (……)
BLOCK CHAIN SERVER 1
BLOCK CHAIN SERVER 2
WAN
1218
POWER TRANSMITTER/ ROUTER DEVICE
1202
POWER TRANSMITTER/ ROUTER DEVICE
1204
1206
1208
1210
1212
1214
1220
CONSULT BLOCK CHAIN TO AUTHENTICATE

FIG. 14B

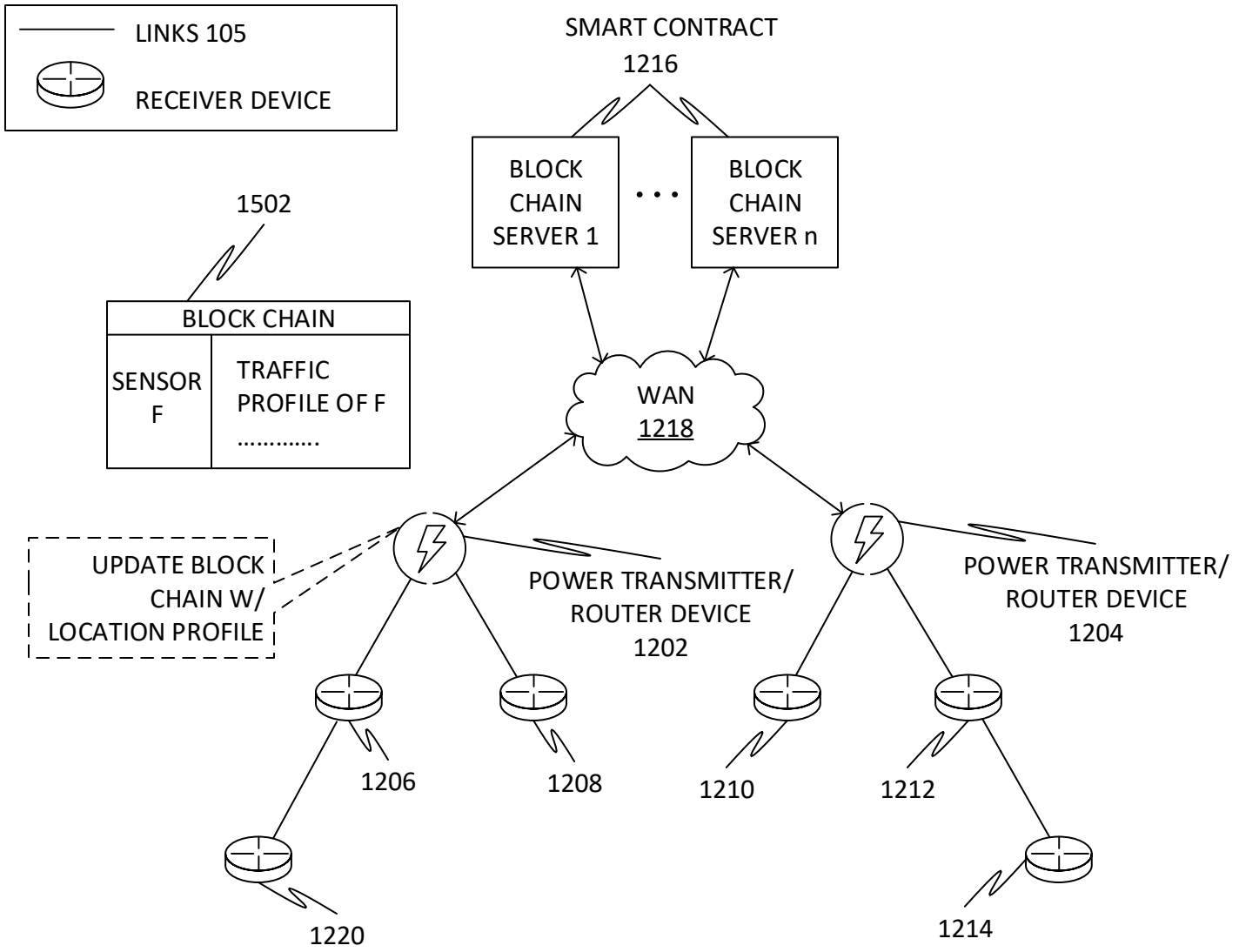
LINKS 105
RECEIVER DEVICE
SMART CONTRACT
1216
BLOCK CHAIN SERVER 1
BLOCK CHAIN SERVER n
1502
BLOCK CHAIN
SENSOR F
TRAFFIC PROFILE OF F
……
WAN
1218
UPDATE BLOCK CHAIN W/ LOCATION PROFILE
POWER TRANSMITTER/ ROUTER DEVICE 1202
POWER TRANSMITTER/ ROUTER DEVICE 1204
1206
1208
1210
1212
1214
1220

FIG. 15A

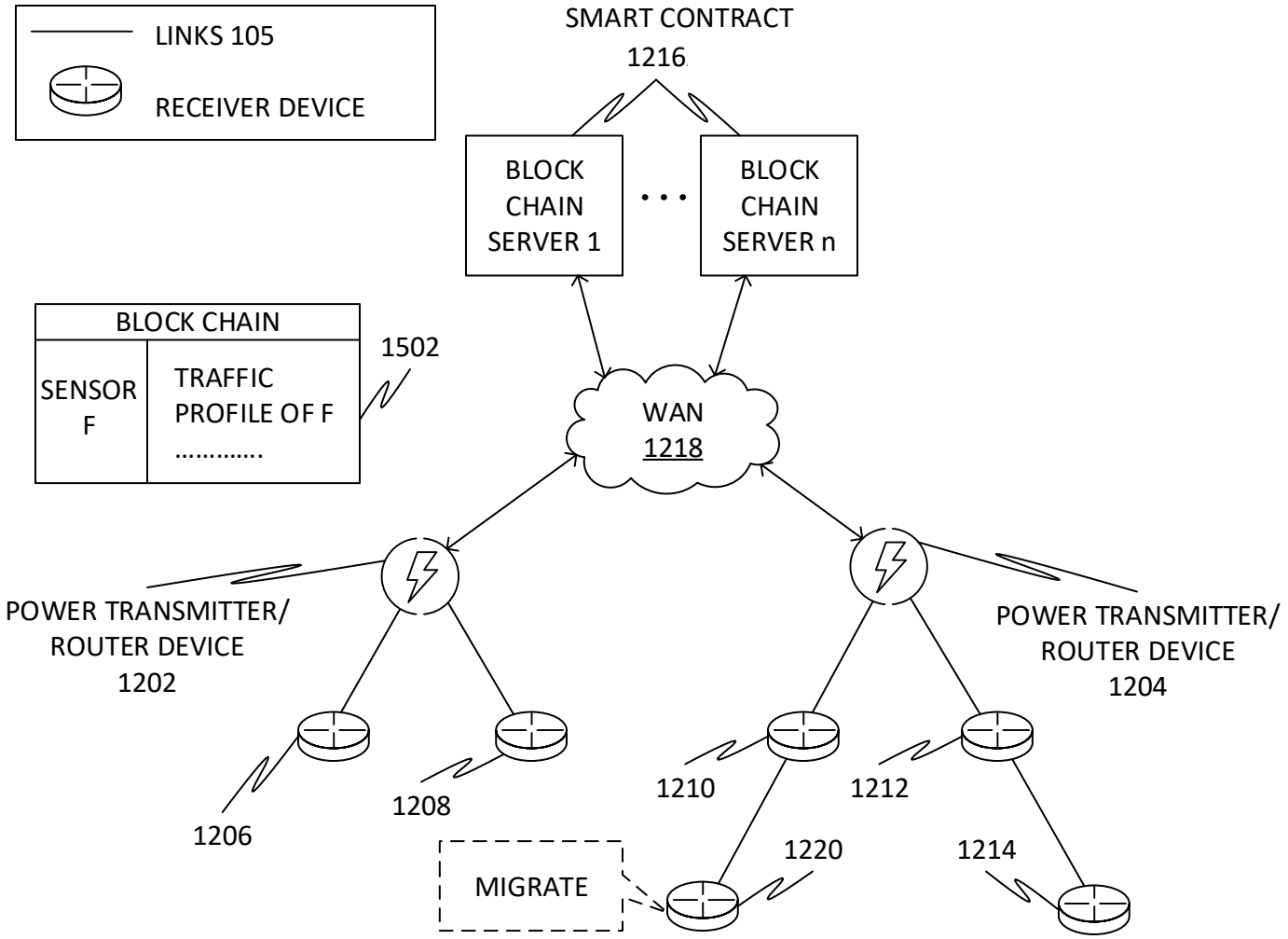
LINKS 105
RECEIVER DEVICE
SMART CONTRACT
1216
BLOCK CHAIN SERVER 1
BLOCK CHAIN SERVER n
BLOCK CHAIN
SENSOR F
TRAFFIC PROFILE OF F
1502
WAN
1218
POWER TRANSMITTER/ ROUTER DEVICE
1202
POWER TRANSMITTER/ ROUTER DEVICE
1204
1206
1208
1210
1212
1214
1220
MIGRATE

FIG. 15B

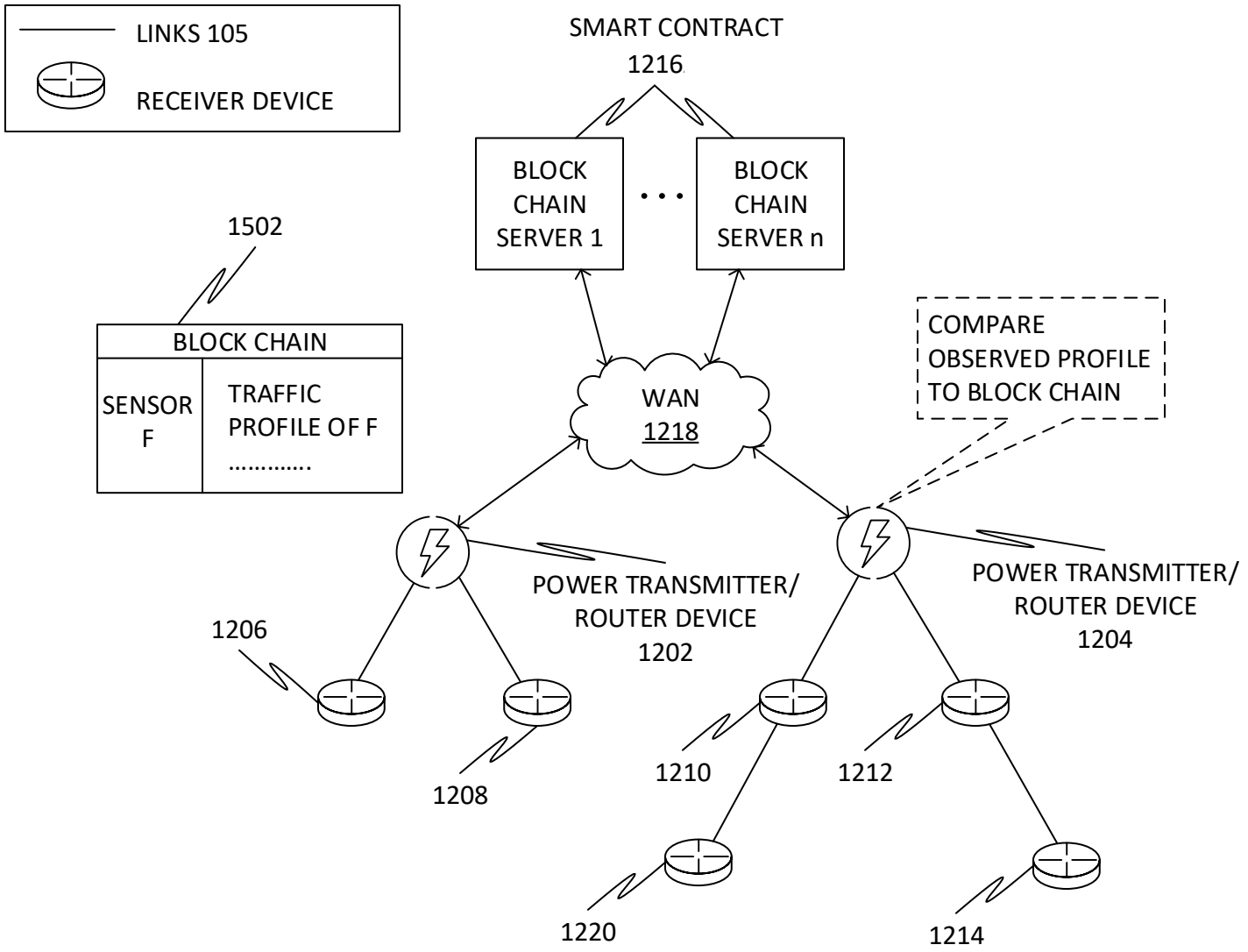
LINKS 105
RECEIVER DEVICE
SMART CONTRACT
1216
BLOCK CHAIN SERVER 1
BLOCK CHAIN SERVER n
1502
BLOCK CHAIN
SENSOR F
TRAFFIC PROFILE OF F
……
WAN
1218
COMPARE OBSERVED PROFILE TO BLOCK CHAIN
POWER TRANSMITTER/ ROUTER DEVICE 1202
POWER TRANSMITTER/ ROUTER DEVICE 1204
1206
1208
1210
1212
1220
1214

FIG. 15C

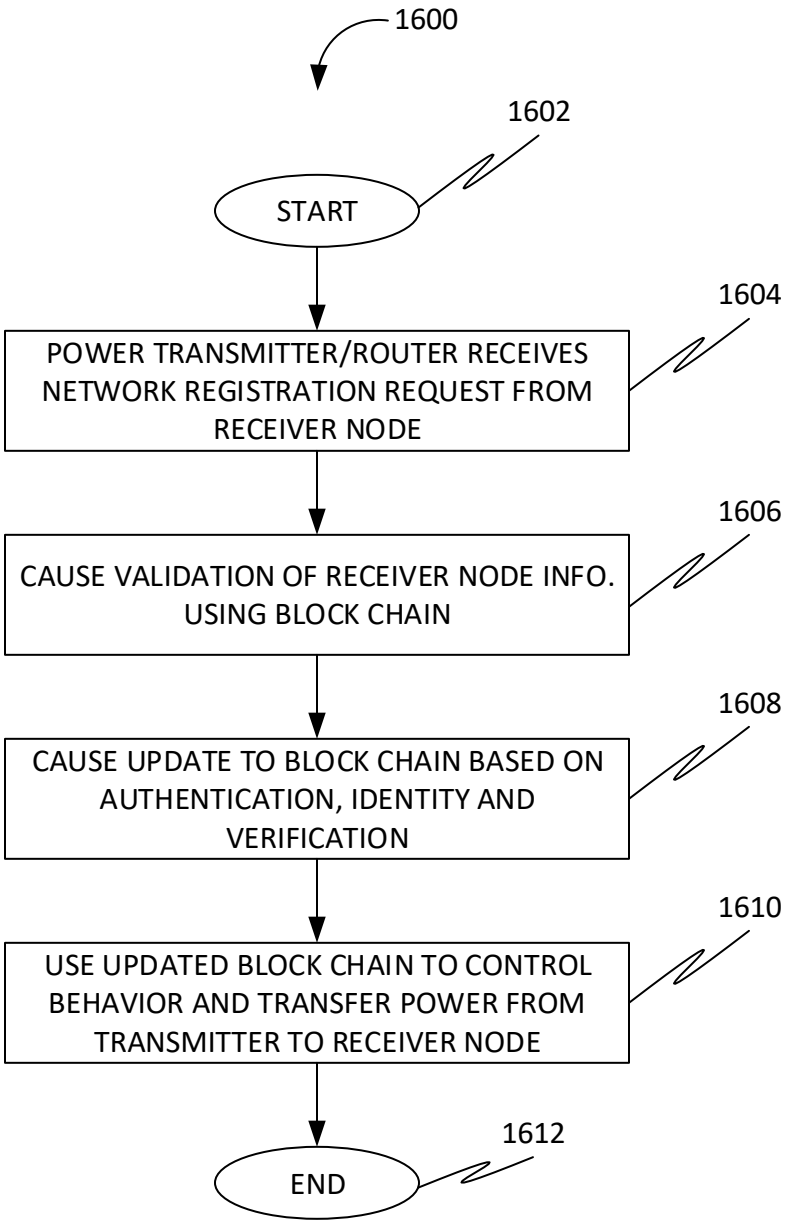
1600
1602
START
1604
POWER TRANSMITTER/ROUTER RECEIVES NETWORK REGISTRATION REQUEST FROM RECEIVER NODE
1606
CAUSE VALIDATION OF RECEIVER NODE INFO. USING BLOCK CHAIN
1608
CAUSE UPDATE TO BLOCK CHAIN BASED ON AUTHENTICATION, IDENTITY AND VERIFICATION
1610
USE UPDATED BLOCK CHAIN TO CONTROL BEHAVIOR AND TRANSFER POWER FROM TRANSMITTER TO RECEIVER NODE
1612
END

FIG. 16