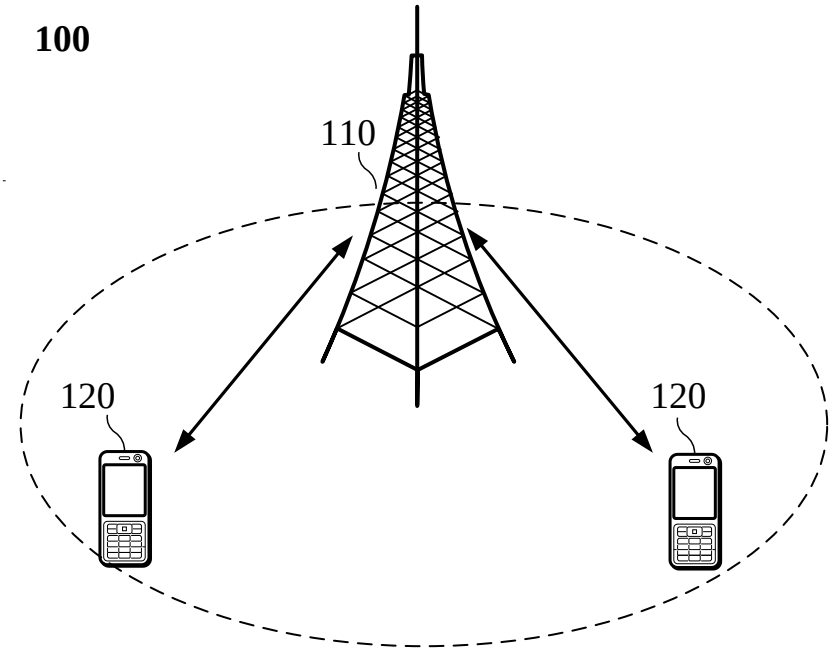
100
110
120
120

FIG. 1

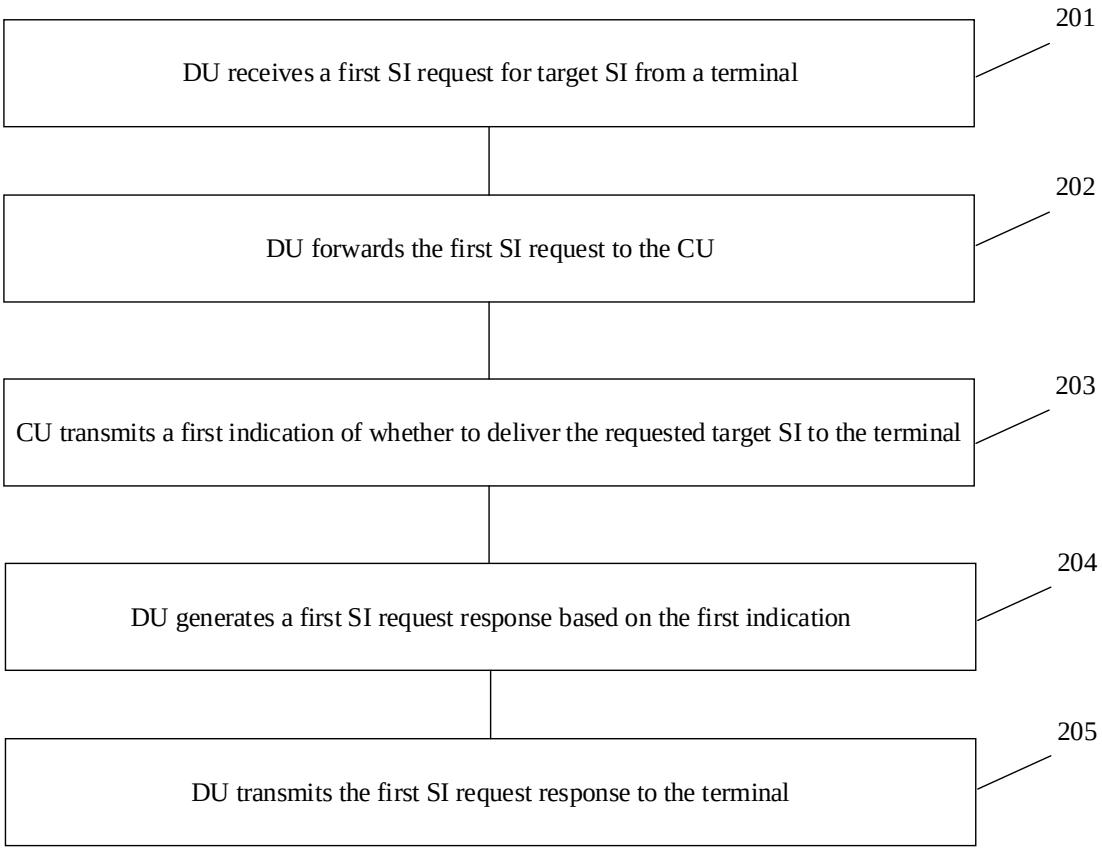
DU receives a first SI request for target SI from a terminal
201
DU forwards the first SI request to the CU
202
CU transmits a first indication of whether to deliver the requested target SI to the terminal
203
DU generates a first SI request response based on the first indication
204
DU transmits the first SI request response to the terminal
205

FIG. 2

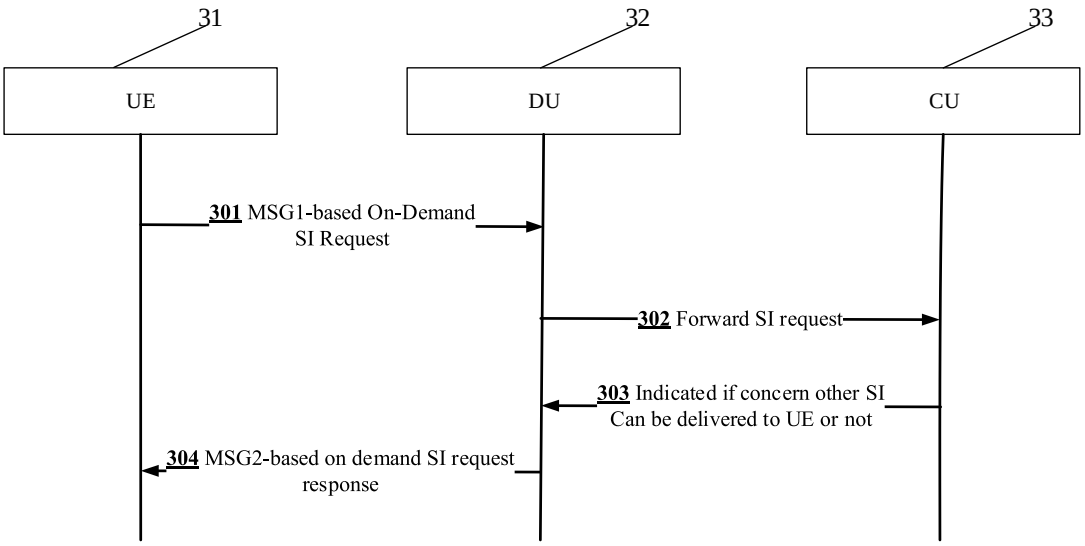
31
32
33
UE
DU
CU
301 MSG1-based On-Demand SI Request
302 Forward SI request
303 Indicated if concern other SI Can be delivered to UE or not
304 MSG2-based on demand SI request response

FIG. 3

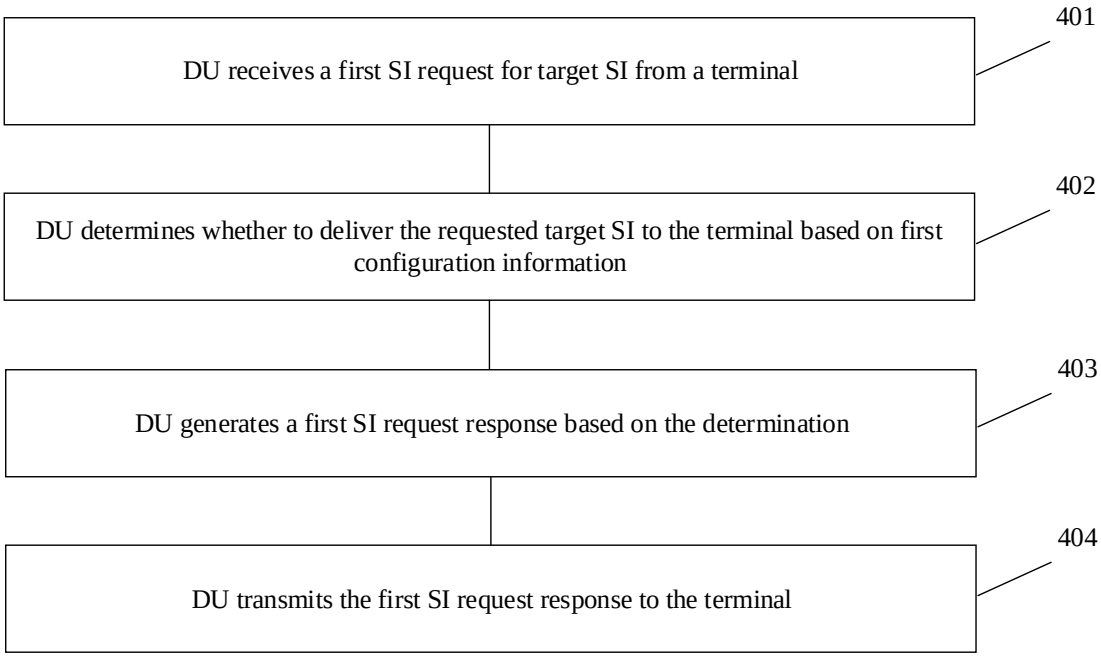
401
DU receives a first SI request for target SI from a terminal
402
DU determines whether to deliver the requested target SI to the terminal based on first configuration information
403
DU generates a first SI request response based on the determination
404
DU transmits the first SI request response to the terminal

FIG. 4

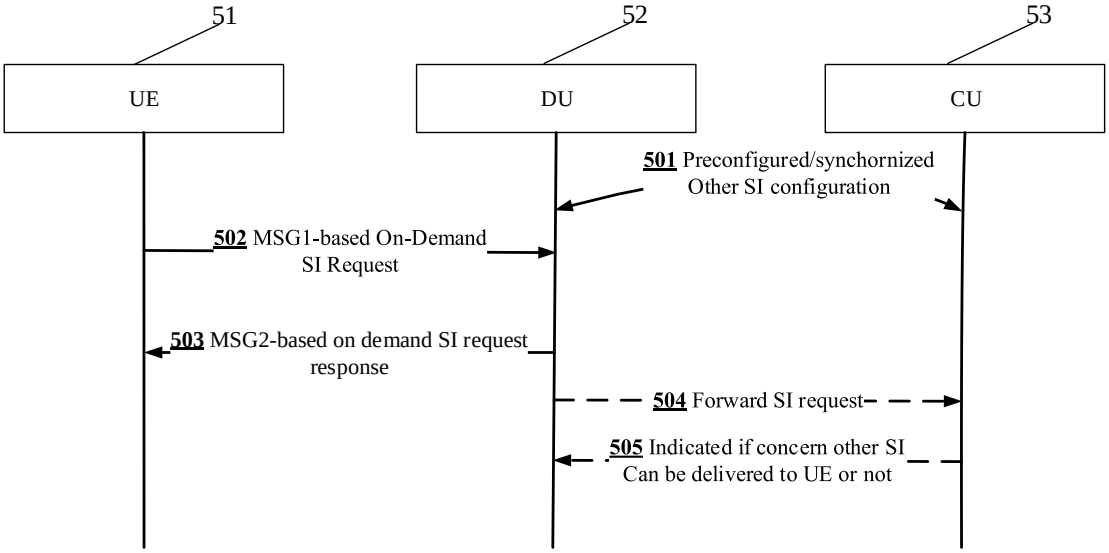

FIG. 5

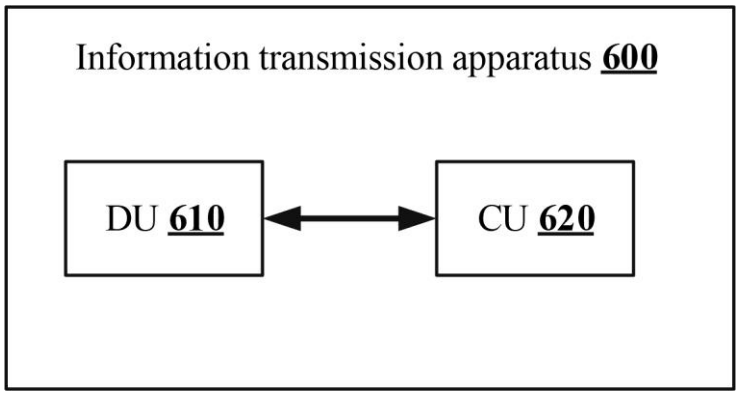

FIG. 6

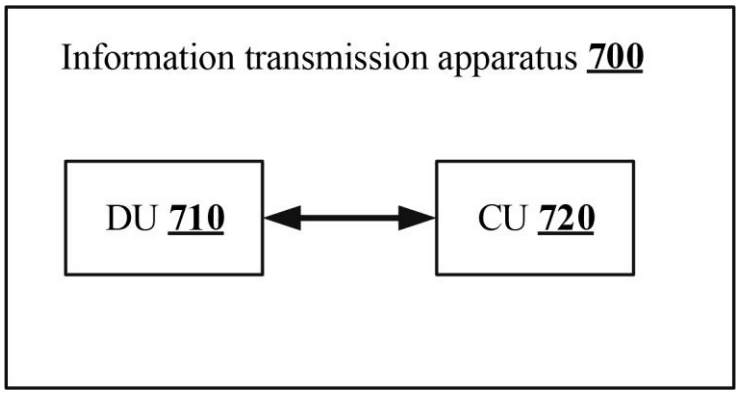

FIG. 7

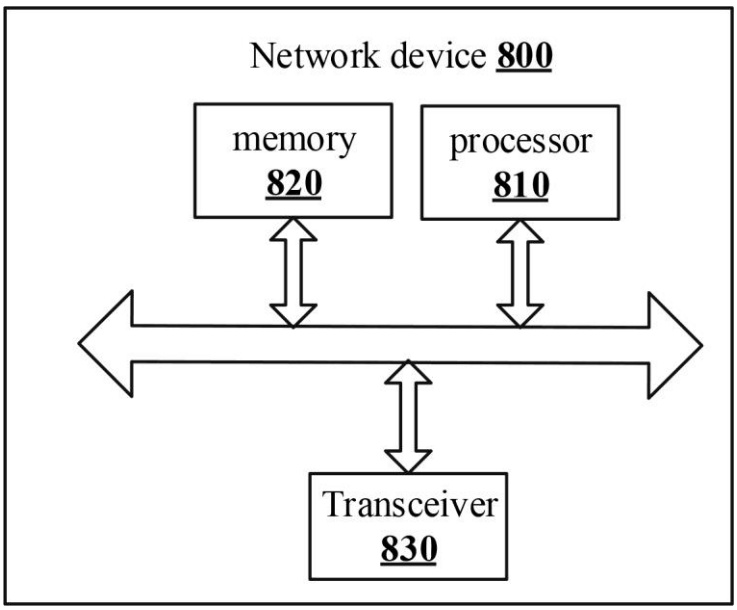

FIG. 8

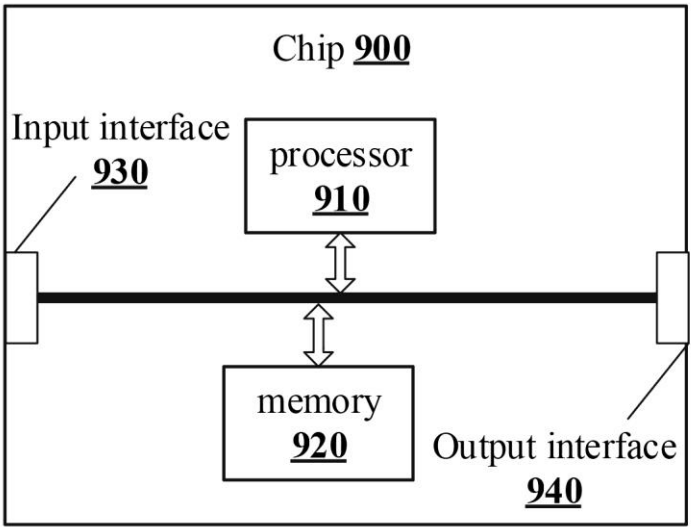

FIG. 9

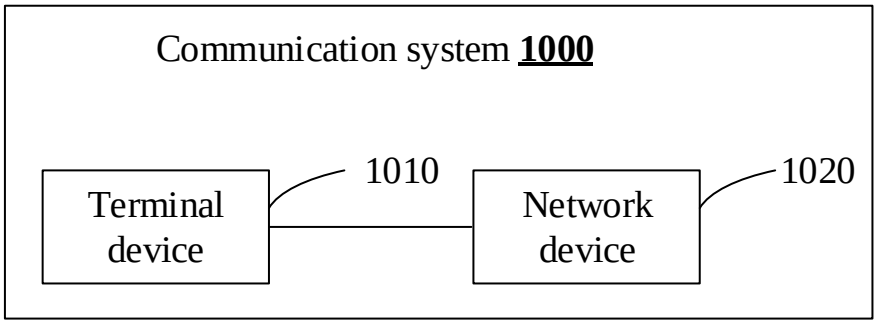

FIG. 10