FIG. 1

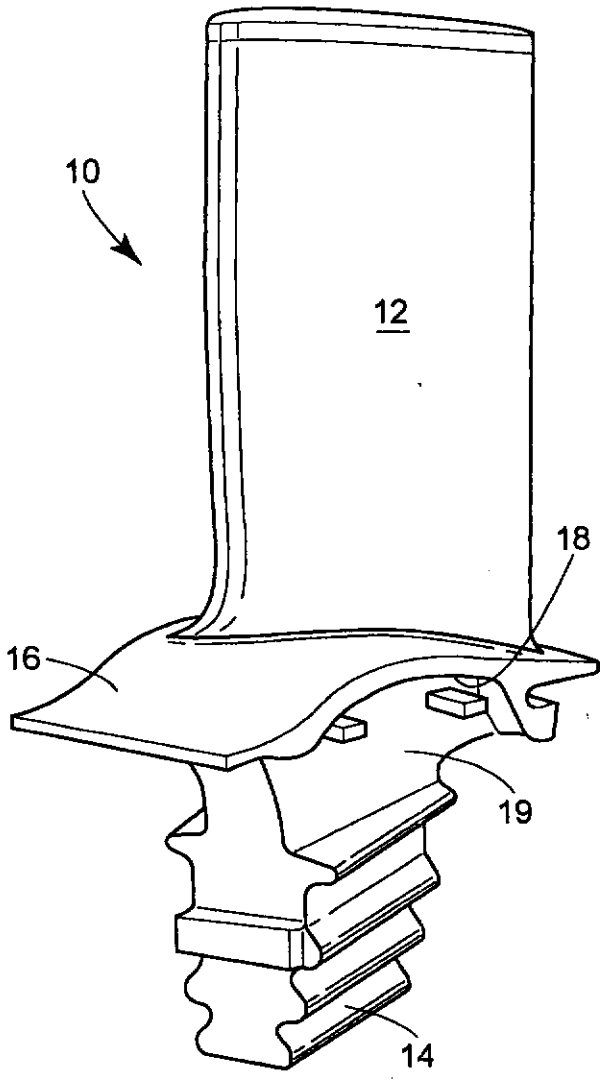

FIG. 2

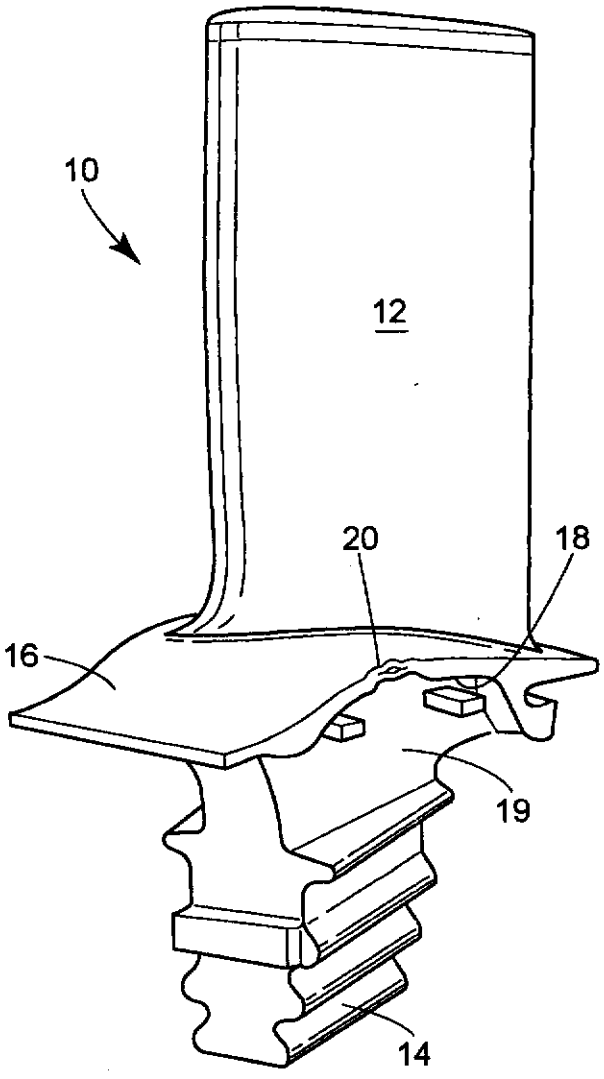

FIG. 3

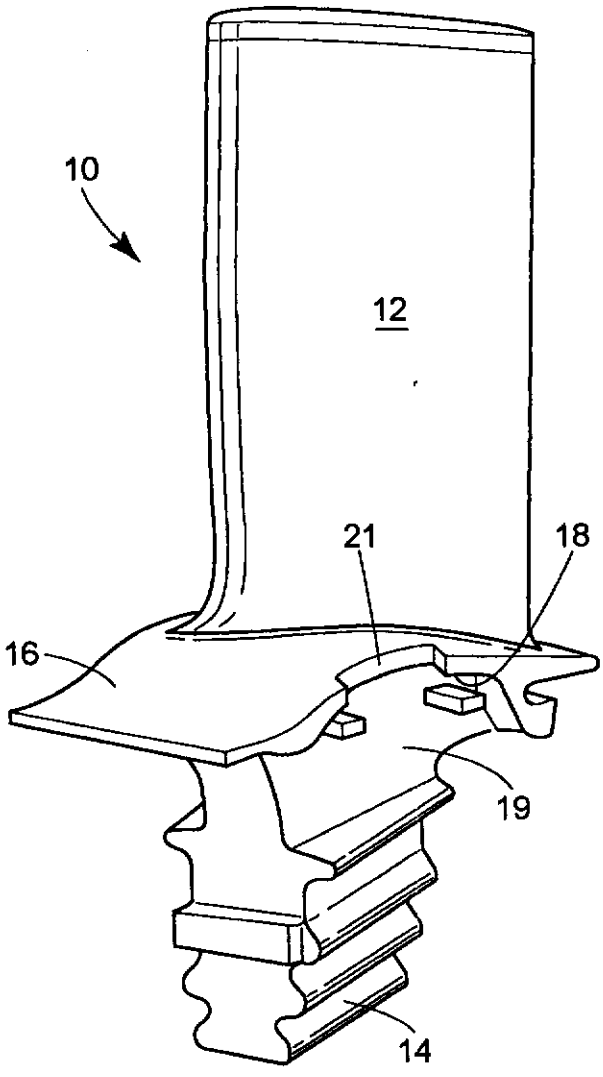

FIG. 4

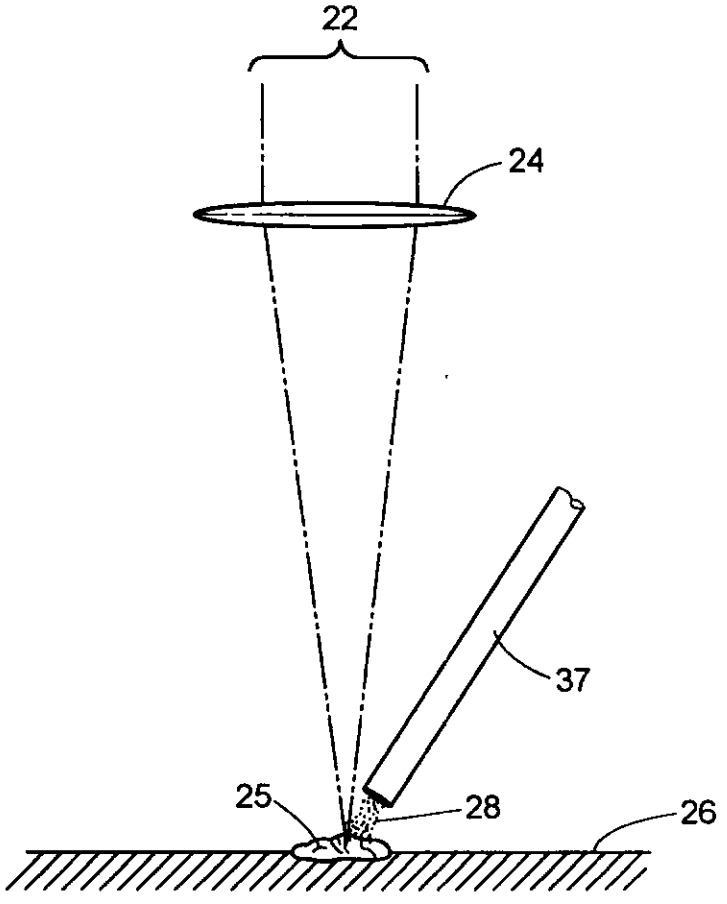

FIG. 5

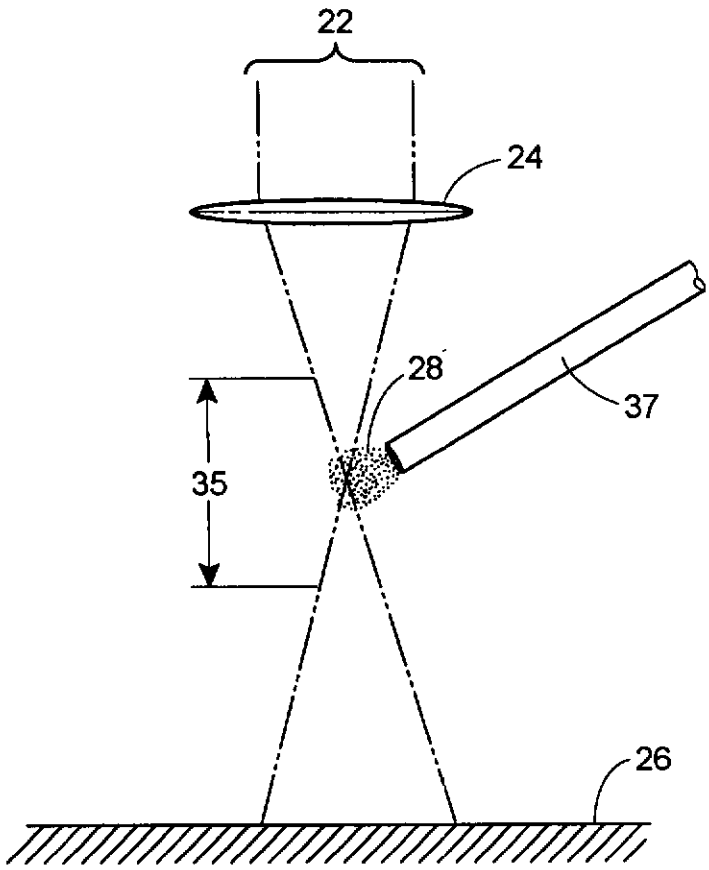

FIG. 6

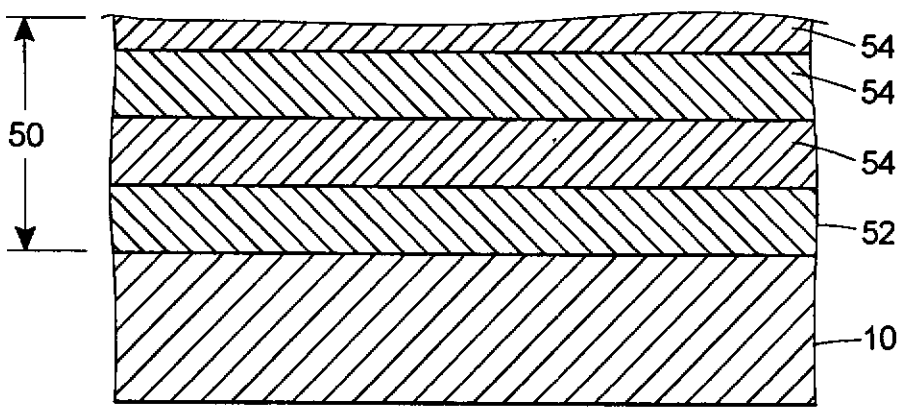

FIG. 7

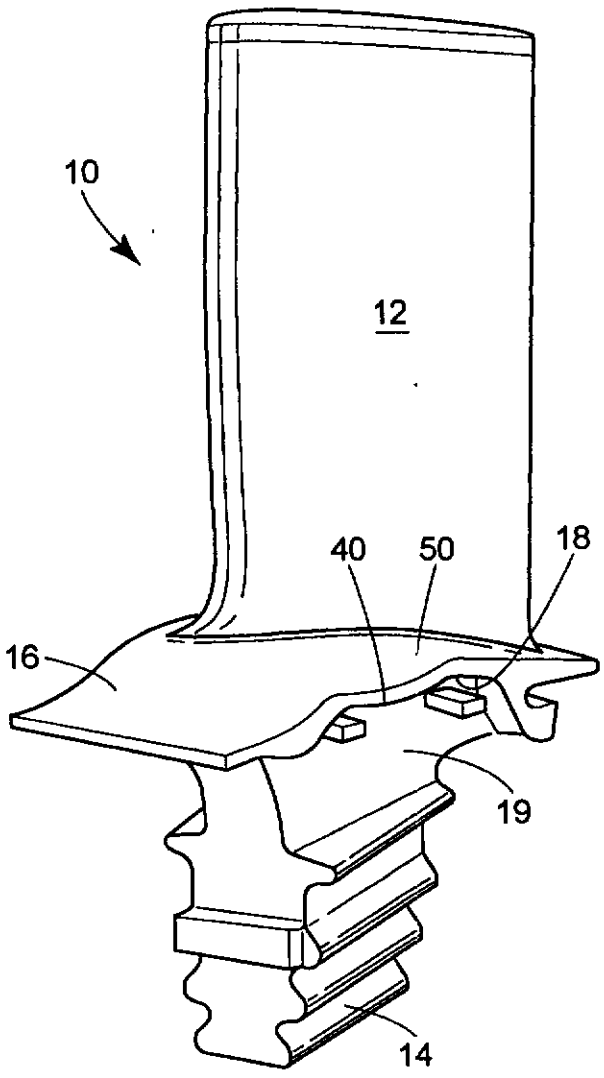

FIG. 8

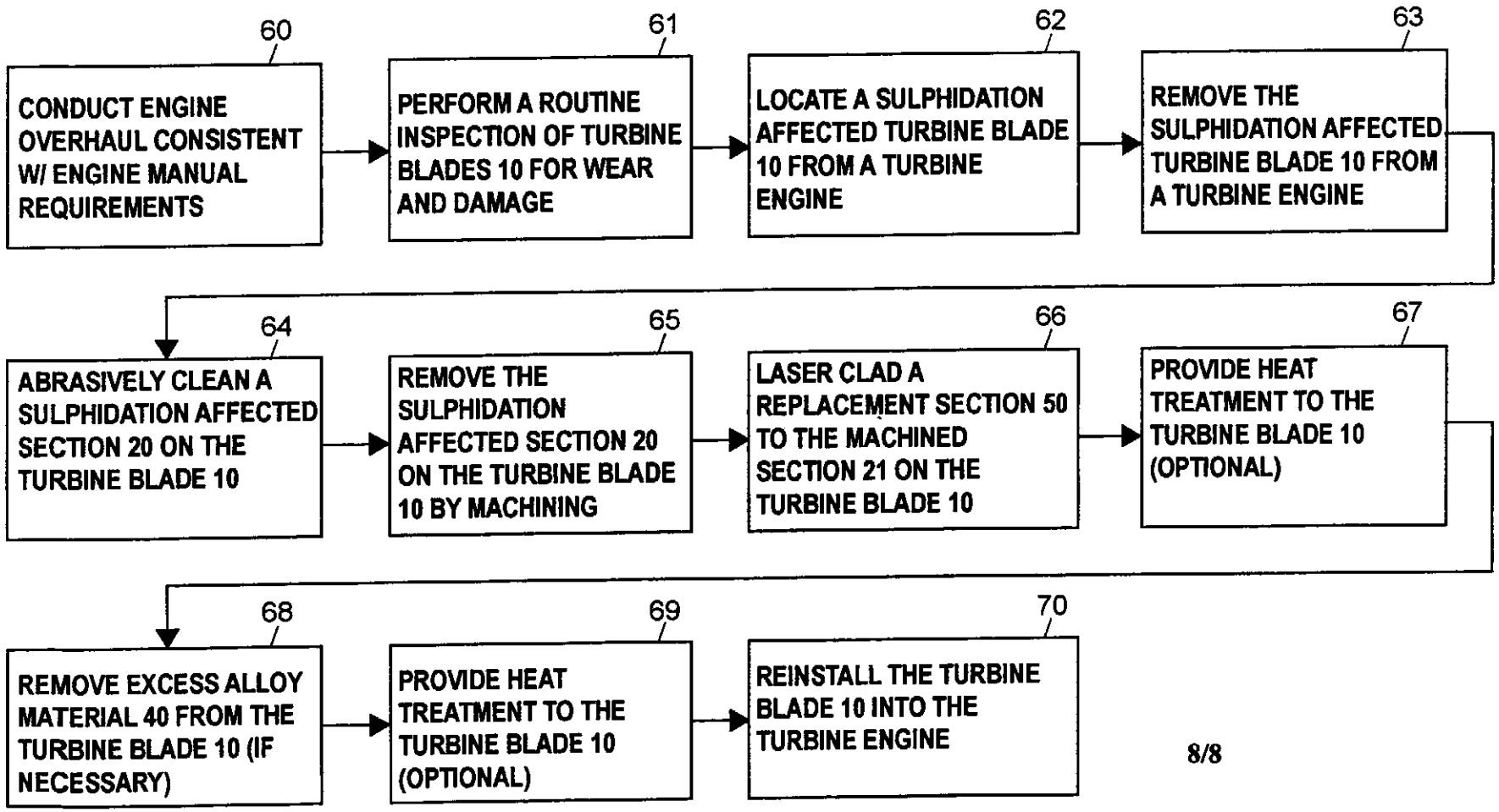
60
CONDUCT ENGINE OVERHAUL CONSISTENT W/ ENGINE MANUAL REQUIREMENTS
61
PERFORM A ROUTINE INSPECTION OF TURBINE BLADES 10 FOR WEAR AND DAMAGE
62
LOCATE A SULPHIDATION AFFECTED TURBINE BLADE 10 FROM A TURBINE ENGINE
63
REMOVE THE SULPHIDATION AFFECTED TURBINE BLADE 10 FROM A TURBINE ENGINE
64
ABRASIVELY CLEAN A SULPHIDATION AFFECTED SECTION 20 ON THE TURBINE BLADE 10
65
REMOVE THE SULPHIDATION AFFECTED SECTION 20 ON THE TURBINE BLADE 10 BY MACHINING
66
LASER CLAD A REPLACEMENT SECTION 50 TO THE MACHINED SECTION 21 ON THE TURBINE BLADE 10
67
PROVIDE HEAT TREATMENT TO THE TURBINE BLADE 10 (OPTIONAL)
68
REMOVE EXCESS ALLOY MATERIAL 40 FROM THE TURBINE BLADE 10 (IF NECESSARY)
69
PROVIDE HEAT TREATMENT TO THE TURBINE BLADE 10 (OPTIONAL)
70
REINSTALL THE TURBINE BLADE 10 INTO THE TURBINE ENGINE